This is a digital copy of a book that was preserved for generations on library shelves before it was carefully scanned by Google as part of a project to make the world's books discoverable online.

It has survived long enough for the copyright to expire and the book to enter the public domain. A public domain book is one that was never subject to copyright or whose legal copyright term has expired. Whether a book is in the public domain may vary country to country. Public domain books are our gateways to the past, representing a wealth of history, culture and knowledge that's often difficult to discover.

Marks, notations and other marginalia present in the original volume will appear in this file - a reminder of this book's long journey from the publisher to a library and finally to you.

Usage guidelines

Google is proud to partner with libraries to digitize public domain materials and make them widely accessible. Public domain books belong to the public and we are merely their custodians. Nevertheless, this work is expensive, so in order to keep providing this resource, we have taken steps to prevent abuse by commercial parties, including placing technical restrictions on automated querying.

We also ask that you:

+ *Make non-commercial use of the files* We designed Google Book Search for use by individuals, and we request that you use these files for personal, non-commercial purposes.
+ *Refrain from automated querying* Do not send automated queries of any sort to Google's system: If you are conducting research on machine translation, optical character recognition or other areas where access to a large amount of text is helpful, please contact us. We encourage the use of public domain materials for these purposes and may be able to help.
+ *Maintain attribution* The Google "watermark" you see on each file is essential for informing people about this project and helping them find additional materials through Google Book Search. Please do not remove it.
+ *Keep it legal* Whatever your use, remember that you are responsible for ensuring that what you are doing is legal. Do not assume that just because we believe a book is in the public domain for users in the United States, that the work is also in the public domain for users in other countries. Whether a book is still in copyright varies from country to country, and we can't offer guidance on whether any specific use of any specific book is allowed. Please do not assume that a book's appearance in Google Book Search means it can be used in any manner anywhere in the world. Copyright infringement liability can be quite severe.

About Google Book Search

Google's mission is to organize the world's information and to make it universally accessible and useful. Google Book Search helps readers discover the world's books while helping authors and publishers reach new audiences. You can search through the full text of this book on the web at `http://books.google.com/`

B 1,081,427

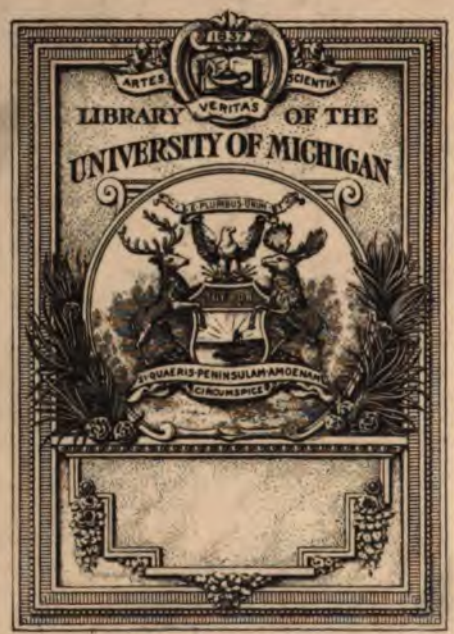
ARTES
VERITAS
SCIENTIA
LIBRARY OF THE
UNIVERSITY OF MICHIGAN
E PLURIBUS UNUM
TUEBOR
SI QUAERIS PENINSULAM AMOENAM
CIRCUMSPICE

973.7
.5
.U

UNITED STATES SHIP PORTSMOUTH.

OFFICIAL RECORDS

OF THE

UNION AND CONFEDERATE NAVIES

IN THE

WAR OF THE REBELLION.

PUBLISHED UNDER THE DIRECTION OF

The Hon. H. A. HERBERT, Secretary of the Navy,

BY

LIEUT. COMMANDER RICHARD RUSH, U. S. NAVY,

SUPERINTENDENT NAVAL WAR RECORDS,

AND

MR. ROBERT H. WOODS.

BY AUTHORITY OF AN ACT OF CONGRESS APPROVED JULY 31, 1894.

SERIES I—VOLUME 5.

OPERATIONS ON THE POTOMAC AND RAPPAHANNOCK RIVERS

FROM DECEMBER 7, 1861, TO JULY 31, 1865.

ATLANTIC BLOCKADING SQUADRON

FROM APRIL 4 TO JULY 15, 1861.

WASHINGTON:

GOVERNMENT PRINTING OFFICE.

1897.

CONTENTS OF PRECEDING VOLUMES.

VOLUME 1.

Operations of the cruisers from January 19, 1861, to December 31, 1862.

VOLUME 2.

Operations of the cruisers from January 1, 1863, to March 31, 1864.

VOLUME 3.

Operations of the cruisers from April 1, 1864, to December 30, 1865.

VOLUME 4.

Operations in the Gulf of Mexico from November 15, 1860, to June 7, 1861. Operations on the Atlantic Coast from January 1 to May 13, 1861. Operations on the Potomac and Rappahannock rivers from January 5 to December 7, 1861.

TABLE OF CONTENTS.

	Page.
List of illustrations	VII
Preface	IX–XI
Order of compilation of Series I	XIII, XIV
List of vessels of Potomac Flotilla and Atlantic Blockading Squadron	XV, XVI
Calendar, 1861 to 1865	XVII–XXI
Operations on the Potomac and Rappahannock rivers	3–613
Principal events:	
Union reports—	
Engagement at Cockpit Point, Va., January 3, 1862	15
Passage of the U. S. S. Pensacola by the batteries on the Potomac River, January 12, 1862	16–18
Passage of the U. S. S. Harriet Lane by the batteries on the Potomac River, February 15, 1862	22
Evacuation by Confederates of batteries on Potomac River, March 9, 1862	25
Expedition up the Rappahannock River to Tappahannock, Va., April 13–15, 1862	33–36
Expedition up the Rappahannock River to Fredericksburg, Va., April 20, 1862	37, 38
Reconnoissance of Mobjack Bay and Piankatank River, Virginia, April 29 and May 2, 1862	44, 45
Burning of the schooner Frances Elmor, October 8, 1862	118, 119
Burning of the ship Alleghanian, October 29, 1862	137–141
Expeditions to Gwynn's Island and Nomini Creek, Virginia, November 3 and 4, 1862	146–148
Engagement at Port Royal, Va., December 4, 1862	182–188
Engagement at Brandywine Hill, Rappahannock River, Virginia, December 10, 11, 1862	190–196
Destruction of salt works on Dividing Creek, Virginia, January 12, 1863	209
Destruction of Confederate stores at Tappahannock, Va., May 30, 1863	277
Transfer of Colonel Kilpatrick's command across the Rappahannock River, June 1, 1863	281
Attack upon transport George Peabody by Confederates at Mathias Point, Va., July 18, 1863	305
Receipt of news of a Confederate expedition to capture boats on the Rappahannock River, July 24, 1863	310
Capture of U. S. steamers Satellite and Reliance, August 16, 1863	322–346
Expedition to the Northern Neck of Virginia, January 12, 1864	388
Capture of the tug Titan by a party of Confederates, March 5, 1864	398–401
Expedition up the Rappahannock River, April 18–21, 1864	411
Expedition to Carter's Creek, Virginia, April 29, 1864	415
Expedition to Mill Creek, Virginia, May 12, 13, 1864	421–424
Expedition up the Rappahannock River, May 16–19, 1864	429, 436

Operations on the Potomac and Rappahannock rivers—Continued. Page.
Principal events:
Union reports—
Experiment with a Confederate torpedo taken from the Rappahannock River, May 18, 1864 431
Destruction of the light on Blakistone Island by Confederates, May 19, 1864 433
Expedition to the Northern Neck of Virginia, June 11–21, 1864 .. 442–451
Expedition to Milford Haven and Stutt's Creek, September 24, 1864 484
Capture of U. S. picket boat No. 2, October 8, 1864 486
Burning of the steamer Knickerbocker by Confederates, February 15, 1865 508
Expedition to Fredericksburg, Va., March 6–8, 1865 522
Expedition up the Rappahannock River, March 12–14, 1865 527–530
Operations in Mattox Creek, Va., March 16–18, 1865 534–536
Capture of the schooners St. Mary's and J. B. Spafford by a party of Confederates, March 31, 1865 540
Capture of the steamer Harriet De Ford by a party of Confederates, April 5, 1865 541–546
Confederate reports—
Letter from Warner T. Jones regarding burning of the ship Alleghanian 141
Reports of the engagement at Port Royal, Va., December 4, 1862. 186–188
Reports of the capture of the U. S. steamers Satellite and Reliance 344–346
Miscellaneous reports relating to affairs on the Rappahannock River 578, 579
Atlantic Blockading Squadron 617–813
Principal events:
Union reports—
Arrival of Flag-Officer Stringham at Hampton Roads, Va., May 13, 1861 629
Engagements with the Confederate battery at Sewell's Point, May 18, 19, 1861 644–648
Capture of the ship A. B. Thompson by the C. S. S. Lady Davis, May 19, 1861 649–658
Capture of the C. S. privateer schooner Savannah, June 3, 1861. 691
Engagement with the Confederate battery at Pig Point, Va., June 5, 1861 697–700
Affair on the Rappahannock River, June 24, 1861 738–741
Recapture of the prize brig Hannah Balch by the C. S. privateer Coffee, June 25, 1861 744
Exchange of shots with Confederate battery at Hatteras Inlet, N. C., July 10, 1861 791
Confederate reports—
Reports of the engagements at Sewell's Point, Va., May 18 and 19, 1861 646–648
Testimony regarding the capture of the ship A. B. Thompson ... 650–658
Letter of marque of the C. S. privateer Savannah 692
Reports of the engagement at Pig Point, Va., June 5, 1861 699
Report of the affair on the Rappahannock River, June 24, 1861. 740
Miscellaneous reports and correspondence relating to affairs on the Atlantic Coast 796–813

LIST OF ILLUSTRATIONS.

	Page.
United States Ship Portsmouth	Frontispiece.
Sketch of Fort Lowry, Va.	35
United States Steamer Jacob Bell	183
Drawing of a Confederate torpedo	433
United States Steamer Fuchsia	484
United States Steamer Minnesota	617
United States Steamer Quaker City	667
Great Seal of the Confederate States	693
United States Steamer Harriet Lane	697

PREFACE.

The publication of the Official Records of the Union and Confederate Navies in the war of the rebellion was begun November 1, 1894, by the Navy Department, under authority of an act of Congress approved July 31, 1894. The plan of publication adopted by the Department for the compilation includes only the use of such material as may be certified to be contemporaneous naval records of the war, which is divided into three series, in the following order of arrangement:

I. The first series embraces the reports, orders, and correspondence, both Union and Confederate, relating to all naval operations on the Atlantic and Gulf coasts and inland waters of the United States during the war of the rebellion, together with the operations of vessels acting singly, either as cruisers or privateers, in different parts of the world. These reports are accompanied by occasional maps and diagrams.

In this series the papers are arranged according to squadrons and flotillas, chronologically, and, as far as possible, the Union reports of any events are immediately followed by the Confederate reports.

II. The second series embraces the reports, orders, and correspondence relating to—

1. The condition of the Union Navy in 1861, before the commencement of hostilities, and to its increase during the progress of the war, including the annual and special reports of the Secretary of the Navy and chiefs of the various bureaus.

2. The construction and outfit of the Confederate Navy, including privateers, setting forth also the annual and special reports of the Confederate Secretary of the Navy and chiefs of bureaus.

3. Statistical data of all vessels, Union and Confederate, as far as can be obtained.

4. Returns of naval and military property captured by the navies of both sides during the war.

5. Correspondence relating to naval prisoners.

This series is also arranged chronologically in each of the above sections as far as practicable.

ORDER OF COMPILATION OF NAVAL WAR RECORDS.

SERIES I.

1. Operations of the Cruisers, 1861–1865.

Union cruisers.
West India (Flying) Squadron, under Acting Rear-Admiral Wilkes, U. S. N., 1862–1863.
West India (Flying) Squadron, under Acting Rear-Admiral Lardner, U. S. N., 1863–1864.
Confederate cruisers and privateers.

2. Operations in the Gulf of Mexico, January to June 7, 1861.

Surrender of the Pensacola Navy Yard.
Cooperation of the Navy in the relief of Fort Pickens.

3. Operations on the Atlantic Coast, January to May 13, 1861.

Cooperation of the Navy in the attempts to relieve Fort Sumter.
Abandonment and destruction of the Norfolk Navy Yard.
Home Squadron, under Flag-Officer Pendergrast, U. S. N.

4. Operations on the Potomac and Rappahannock rivers, 1861–1865.

Potomac Flotilla, under Commander Ward, U. S. N., 1861.
Potomac Flotilla, under Captain Craven, U. S. N., 1861.
Potomac Flotilla, under Lieutenant Wyman, U. S. N., 1861–1862.
Potomac Flotilla, under Commodore Harwood, U. S. N., 1862–1863.
Potomac Flotilla, under Commander Parker, U. S. N., 1863–1865.

5. Atlantic Blockading Squadrons, 1861–1865.

Atlantic Blockading Squadron, under Flag-Officer Stringham, U. S. N., May 13 to Sept. 23, 1861.
West India Squadron, under Flag-Officer Pendergrast, U. S. N., 1861.
Naval Defenses of Virginia and North Carolina, under Flag-Officer Barron, C. S. N.
Atlantic Blockading Squadron, under Flag Officer Goldsborough, U. S. N., 1861.
North Atlantic Blockading Squadron, under Rear-Admiral Goldsborough, U. S. N., 1861–1862.
Naval Defenses of Virginia and North Carolina, under Flag-Officer Lynch, C. S. N.
James River Squadron, under Flag-Officer Buchanan, C. S. N.
James River Squadron, under Flag-Officer Tattnall, C. S. N.
James River Flotilla, under Commodore Wilkes, U. S. N., 1862.
North Atlantic Blockading Squadron, under Acting Rear-Admiral Lee, U. S. N., 1862–1864.
James River Squadron, under Flag-Officers Forrest and Mitchell, C. S. N.
*Naval Defenses Inland Waters of North Carolina, under Commander Pinkney, C. S. N.
*Naval defenses Cape Fear River, North Carolina, under Flag-Officer Lynch, C. S. N.
North Atlantic Blockading Squadron, under Rear-Admiral Porter, U. S. N., 1864–1865.
James River Squadron, under Flag-Officers Mitchell and Semmes, C. S. N.
*Naval Defenses Cape Fear River, North Carolina, under Flag-Officer Pinkney, C. S. N.
North Atlantic Blockading Squadron, under Acting Rear-Admiral Radford, U. S. N., 1865.
South Atlantic Blockading Squadron, under Rear-Admiral Du Pont, U. S. N., 1861–1863.
*Naval Defenses of South Carolina and Georgia, under Flag-Officer Tattnall, C. S. N.
*Naval Defenses of Charleston Harbor, South Carolina, under Flag-Officer Ingraham, C. S. N.
South Atlantic Blockading Squadron, under Rear-Admiral Dahlgren, U. S. N., 1863–1865.
*Naval Defenses of Charleston Harbor, South Carolina, under Flag-Officer Tucker, C. S. N.
Naval Defenses of Savannah, Ga., under Flag-Officers Hunter and Tattnall, C. S. N.

*The Confederate material under this head is very scant. It is therefore hoped that those who have any Confederate naval documents upon the subject will communicate with the Office of Naval War Records, Navy Department, Washington, D. C.

6. Gulf Blockading Squadrons, 1861–1865.

Gulf Blockading Squadron, under Flag-Officer Mervine, U. S. N., 1861.
Gulf Blockading Squadron, under Flag-Officer McKean, U. S. N., 1861–1862.
* Mississippi River Defenses, under Flag-Officer Hollins, C. S. N.
East Gulf Blockading Squadron, under Flag-Officer McKean, U. S. N., 1862.
East Gulf Blockading Squadron, under Acting Rear-Admiral Lardner, U. S. N., 1862.
East Gulf Blockading Squadron, under Acting Rear-Admiral Bailey, U. S. N., 1862–1864.
East Gulf Blockading Squadron, under Captain Greene, U. S. N., 1864.
East Gulf Blockading Squadron, under Acting Rear-Admiral Stribling, U. S. N., 1864–1865.
West Gulf Blockading Squadron, under Flag-Officer Farragut, U. S. N., 1862–1863.
Mortar Flotilla, under Commander Porter, U. S. N., 1862.
Lower Mississippi River Defenses, under Commander J. K. Mitchell, C. S. N.
Mobile Defenses, under Flag-Officer Randolph, C. S. N.
Trans-Mississippi Marine Department, under Major Leon Smith, C. S. A.
West Gulf Blockading Squadron, under Commodore Bell, U. S. N. (ad interim), 1863.
West Gulf Blockading Squadron, under Rear-Admiral Farragut, U. S. N., 1864.
* Mobile Defenses, under Admiral Buchanan, C. S. N.
West Gulf Blockading Squadron, under Commodore Palmer, U. S. N., 1864–1865.
West Gulf Blockading Squadron, under Acting Rear-Admiral Thatcher, U. S. N., 1865.
* Mobile Defenses, under Flag-Officer Farrand, C. S. N.

7. Operations on the Western Rivers, 1861–1865.

Naval Forces on Western Waters, under Commander Rodgers, U. S. N., 1861.
Naval Forces on Western Waters, under Flag-Officer Foote, U. S. N., 1861–1862.
* Mississippi River Defenses, under Flag-Officer Hollins, C. S. N.
Naval Forces on Western Waters, under Flag-Officer Davis, U. S. N., 1862.
* Mississippi River Defense Fleet, under Captain Montgomery, C. S. A.
* Mississippi River Defenses, under Commander R. F. Pinkney, C. S. N
* Mississippi River Defenses, under Flag-Officer Lynch, C. S. N.
Mississippi Squadron, under Rear-Admiral Porter, U. S. N., 1862–1864.
Mississippi Squadron, under Acting Rear-Admiral Lee, U. S. N., 1864–1865.
* Naval Defenses of Red River, Louisiana, under Lieutenant J. H. Carter, C. S. N.

---

*The Confederate material under this head is very scant. It is therefore hoped that those who have any Confederate naval documents upon the subject will communicate with the Office of Naval War Records, Navy Department, Washington, D. C.

LIST OF UNITED STATES VESSELS OF WAR SERVING IN THE POTOMAC FLOTILLA AND ATLANTIC BLOCKADING SQUADRON DURING THE PERIODS COVERED BY THIS VOLUME.

NAME.	RATE.	TONNAGE.	CLASS.	CREW.	GUNS.
Adela	Fourth	583	Side-wheel steamer	70	7
Adolph Hugel	Fourth	269	Mortar schooner	34	3
Albatross	Fourth	378	Screw steamer	68	3
Anacostia	Fourth	217	....do	67	2
Arletta	Fourth	159	Mortar schooner	39	3
Aroostook	Fourth	507	Screw steamer.	94	4
Bailey			Coast Survey schooner	12	
Bainbridge	Fourth	259	Sailing brig	72	6
Baltimore	Fourth	500	Side-wheel steamer	18	1
Banshee	Fourth	533	do	60	3
Bibb			Coast Survey schooner		
Cactus	Fourth	176	Side-wheel steamer	39	1
Casco	Fourth	614	Ironclad	60	1
Chimo	Fourth	614	.....do	51	1
Cœur de Lion	Fourth	110	Side-wheel steamer	29	3
Commodore Barney	Fourth	513	.....do	108	7
Commodore Jones	Fourth	542	.....do	103	6
Commodore Morris	Fourth	532	.....do	83	6
Commodore Read	Fourth	650	.....do	84	6
Corwin			Coast Survey steamer		
Crusader	Fourth	545	Screw steamer	83	7
Cumberland	Second	1,726	Sailing sloop.	288	24
Currituck	Fourth	193	Screw steamer	52	5
Dale	Fourth	566	Sailing sloop	123	15
Dan Smith	Fourth	149	Mortar schooner	32	5
Dana			Coast Survey schooner	11	
Dawn	Fourth	399	Screw steamer	34	2
Daylight	Fourth		.....do	682	4
Delaware	Fourth	357	Side-wheel steamer	57	3
Don	Fourth	390	Screw steamer	94	8
Dragon	Fourth	118	.....do	42	2
Ella	Fourth	230	Side-wheel steamer	39	2
Eureka	Fourth	50	Screw steamer	19	1
Flag	Third	938	.....do	116	7
Fuchsia	Fourth	180	.....do	43	3
George Mangham	Fourth	274	Mortar schooner	26	3
Harriet Lane	Third	619	Side-wheel steamer	100	5
Heliotrope	Fourth	238	.....do	66	1
Howell Cobb			Coast Survey schooner		
Iroquois	Third	1,016	Screw sloop	154	8
Isaac N. Seymour	Fourth	133	Side-wheel steamer	30	2
Jacob Bell	Fourth	229	.....do	49	2
Jamestown	Third	985	Sailing sloop	186	22
Juniper	Fourth	116	Screw steamer	26	2
Keystone State	Third	1,364	Side-wheel steamer	133	6
King Philip	Fourth	500	.....do	14	1
Leslie	Fourth	100	Screw steamer	10	2
Little Ada	Fourth	196	.....do	53	2
Mahaska	Third	832	Side-wheel steamer	145	9

List of United States vessels of war serving in the Potomac Flotilla and Atlantic Blocking Squadron, etc.—Continued.

Name.	Rate.	Tonnage.	Class.	Crew.	Gu
Matthew Vassar	Fourth	182	Mortar schooner	29	
Mercury	Fourth	187	Side-wheel steamer	56	
Minnesota	First	3,307	Screw frigate	540	
Moccasin	Fourth	192	Screw steamer	31	
Monticello	Fourth	655	do	96	
Morse	Fourth	513	Side-wheel steamer	78	
Mount Vernon	Fourth	625	Screw steamer	50	
Nansemond	Fourth	340	Side-wheel steamer	55	
Niagara	First	4,582	Screw steamer	387	
Penguin	Fourth	389	do	69	
Periwinkle	Fourth	387	do	37	
Perry	Fourth	280	Sailing brig	77	
Picket boat No. 4		20	Screw steamer	9	
Picket boat No. 6		10	do	7	
Port Royal	Third	805	Side-wheel steamer	103	
Primrose	Fourth	94	Screw steamer	26	
Quaker City	Second	1,600	Side-wheel steamer	129	
Racer	Fourth	252	Mortar schooner	35	
Reliance	Fourth	90	Screw steamer	17	
Rescue	Fourth	111	do	20	
Resolute	Fourth	90	do	16	
Roanoke	First	3,435	Ironclad	347	
St. Lawrence	Second	1,726	Sailing frigate	374	
Sangamon	Third	844	Ironclad	85	
Satellite	Fourth	217	Side-wheel steamer	43	
Saugus	Fourth	1,034	Ironclad	78	
Savannah	Second	1,708	Sailing sloop	264	
Seminole	Third	801	Screw sloop	120	
Sophronia	Fourth	217	Mortar schooner	32	
Stepping Stones	Fourth	226	Side-wheel steamer	21	
Susquehanna	First	2,450	do	264	
T. A. Ward	Fourth	284	Mortar schooner	27	
Teaser	Fourth	90	Screw steamer	25	
Thomas Freeborn	Fourth	269	Side-wheel steamer	67	
Tulip	Fourth	183	Screw steamer	45	
Union	Fourth	1,114	do	75	
Vandalia	Fourth	783	Sailing sloop	179	
Verbena	Fourth	104	Screw steamer	20	
Wabash	First	3,274	Screw frigate	523	
Wachusett	Third	1,032	Screw sloop	167	
Watch	Fourth	65	Screw steamer	18	
Western World	Fourth	450	do	90	
William Bacon	Fourth	183	Mortar schooner	36	
William G. Putnam	Fourth	149	Side-wheel steamer	17	
Wyandank	Fourth	399	do	45	
Wyandotte	Fourth	458	Screw steamer	71	
Yankee	Fourth	328	Side-wheel steamer	48	
Young America	Fourth	173	Screw steamer	13	
Young Rover	Fourth	418	do	85	
Zeta	Fourth		do	10	

a No battery.

CALENDAR.

1861.

JANUARY.

Sun.	M.	T.	W.	T.	F.	Sat.
...	...	1	2	3	4	5
6	7	8	9	10	11	12
13	14	15	16	17	18	19
20	21	22	23	24	25	26
27	28	29	30	31	...	...
...	...	...	...	...	...	...

FEBRUARY.

Sun.	M.	T.	W.	T.	F.	Sat.
...	...	...	...	...	1	2
3	4	5	6	7	8	9
10	11	12	13	14	15	16
17	18	19	20	21	22	23
24	25	26	27	28	...	...
...	...	...	...	...	...	...

MARCH.

Sun.	M.	T.	W.	T.	F.	Sat.
...	...	...	...	...	1	2
3	4	5	6	7	8	9
10	11	12	13	14	15	16
17	18	19	20	21	22	23
24	25	26	27	28	29	30
31	...	...	...	...	...	...

APRIL.

Sun.	M.	T.	W.	T.	F.	Sat.
...	1	2	3	4	5	6
7	8	9	10	11	12	13
14	15	16	17	18	19	20
21	22	23	24	25	26	27
28	29	30	...	...	...	...
...	...	...	...	...	...	...

MAY.

Sun.	M.	T.	W.	T.	F.	Sat.
...	...	...	1	2	3	4
5	6	7	8	9	10	11
12	13	14	15	16	17	18
19	20	21	22	23	24	25
26	27	28	29	30	31	...
...	...	...	...	...	...	...

JUNE.

Sun.	M.	T.	W.	T.	F.	Sat.
...	...	...	...	...	...	1
2	3	4	5	6	7	8
9	10	11	12	13	14	15
16	17	18	19	20	21	22
23	24	25	26	27	28	29
30	...	...	...	...	...	...

JULY.

Sun.	M.	T.	W.	T.	F.	Sat.
...	1	2	3	4	5	6
7	8	9	10	11	12	13
14	15	16	17	18	19	20
21	22	23	24	25	26	27
28	29	30	31	...	...	...

AUGUST.

Sun.	M.	T.	W.	T.	F.	Sat.
...	...	...	...	1	2	3
4	5	6	7	8	9	10
11	12	13	14	15	16	17
18	19	20	21	22	23	24
25	26	27	28	29	30	31

SEPTEMBER.

Sun.	M.	T.	W.	T.	F.	Sat.
1	2	3	4	5	6	7
8	9	10	11	12	13	14
15	16	17	18	19	20	21
22	23	24	25	26	27	28
29	30	...	...	...	...	...

OCTOBER.

Sun.	M.	T.	W.	T.	F.	Sat.
...	...	1	2	3	4	5
6	7	8	9	10	11	12
13	14	15	16	17	18	19
20	21	22	23	24	25	26
27	28	29	30	31	...	...

NOVEMBER.

Sun.	M.	T.	W.	T.	F.	Sat.
...	...	...	...	...	1	2
3	4	5	6	7	8	9
10	11	12	13	14	15	16
17	18	19	20	21	22	23
24	25	26	27	28	29	30

DECEMBER.

Sun.	M.	T.	W.	T.	F.	Sat.
1	2	3	4	5	6	7
8	9	10	11	12	13	14
15	16	17	18	19	20	21
22	23	24	25	26	27	28
29	30	31	...	...	...	...

CALENDAR.

1862.

JANUARY.

Sun	M.	T.	W.	T.	F.	Sat.
...	...	...	1	2	3	4
5	6	7	8	9	10	11
12	13	14	15	16	17	18
19	20	21	22	23	24	25
26	27	28	29	30	31	...
...	...	...	...	...	...	...

FEBRUARY.

Sun.	M.	T.	W.	T.	F.	Sat.
...	...	...	...	...	...	1
2	3	4	5	6	7	8
9	10	11	12	13	14	15
16	17	18	19	20	21	22
23	24	25	26	27	28	...
...	...	...	...	...	...	...

MARCH.

Sun.	M.	T.	W.	T.	F.	Sat.
...	...	...	...	...	...	1
2	3	4	5	6	7	8
9	10	11	12	13	14	15
16	17	18	19	20	21	22
23	24	25	26	27	28	29
30	31	...	...	...	...	...

APRIL.

Sun.	M.	T.	W.	T.	F.	Sat.
...	...	1	2	3	4	5
6	7	8	9	10	11	12
13	14	15	16	17	18	19
20	21	22	23	24	25	26
27	28	29	30	...	...	...

MAY.

Sun.	M.	T.	W.	T.	F.	Sat.
...	...	...	...	1	2	3
4	5	6	7	8	9	10
11	12	13	14	15	16	17
18	19	20	21	22	23	24
25	26	27	28	29	30	31

JUNE.

Sun.	M.	T.	W.	T.	F.	Sat.
1	2	3	4	5	6	7
8	9	10	11	12	13	14
15	16	17	18	19	20	21
22	23	24	25	26	27	28
29	30	...	...	...	...	...

JULY.

Sun.	M.	T.	W.	T.	F.	Sat.
...	...	1	2	3	4	5
6	7	8	9	10	11	12
13	14	15	16	17	18	19
20	21	22	23	24	25	26
27	28	29	30	31	...	...
...	...	...	...	...	...	...

AUGUST.

Sun.	M.	T.	W.	T.	F.	Sat.
...	...	...	...	...	1	2
3	4	5	6	7	8	9
10	11	12	13	14	15	16
17	18	19	20	21	22	23
24	25	26	27	28	29	30
31	...	...	...	...	...	...

SEPTEMBER.

Sun.	M.	T.	W.	T.	F.	Sat.
...	1	2	3	4	5	6
7	8	9	10	11	12	13
14	15	16	17	18	19	20
21	22	23	24	25	26	27
28	29	30	...	...	...	...
...	...	...	...	...	...	...

OCTOBER.

Sun.	M.	T.	W.	T.	F.	Sat.
...	...	...	1	2	3	4
5	6	7	8	9	10	11
12	13	14	15	16	17	18
19	20	21	22	23	24	25
26	27	28	29	30	31	...
...	...	...	...	...	...	...

NOVEMBER.

Sun.	M.	T.	W.	T.	F.	Sat.
...	...	...	...	...	...	1
2	3	4	5	6	7	8
9	10	11	12	13	14	15
16	17	18	19	20	21	22
23	24	25	26	27	28	29
30	...	...	...	...	...	...

DECEMBER.

Sun.	M.	T.	W.	T.	F.	Sat.
...	1	2	3	4	5	6
7	8	9	10	11	12	13
14	15	16	17	18	19	20
21	22	23	24	25	26	27
28	29	30	31	...	...	...
...	...	...	...	...	...	...

CALENDAR.

1863.

JANUARY.

Sun.	M.	T.	W.	T.	F.	Sat.
...	...	...	...	1	2	3
4	5	6	7	8	9	10
11	12	13	14	15	16	17
18	19	20	21	22	23	24
25	26	27	28	29	30	31

FEBRUARY.

Sun.	M.	T.	W.	T.	F.	Sat.
1	2	3	4	5	6	7
8	9	10	11	12	13	14
15	16	17	18	19	20	21
22	23	24	25	26	27	28
...	...	...	...	...	...	...

MARCH.

Sun.	M.	T.	W.	T.	F.	Sat.
1	2	3	4	5	6	7
8	9	10	11	12	13	14
15	16	17	18	19	20	21
22	23	24	25	26	27	28
29	30	31	...	...	...	...

APRIL.

Sun.	M.	T.	W.	T.	F.	Sat.
...	...	...	1	2	3	4
5	6	7	8	9	10	11
12	13	14	15	16	17	18
19	20	21	22	23	24	25
26	27	28	29	30	...	...
...	...	...	...	...	...	...

MAY.

Sun.	M.	T.	W.	T.	F.	Sat.
...	...	...	...	...	1	2
3	4	5	6	7	8	9
10	11	12	13	14	15	16
17	18	19	20	21	22	23
24	25	26	27	28	29	30
31	...	...	...	...	...	...

JUNE.

Sun.	M.	T.	W.	T.	F.	Sat.
...	1	2	3	4	5	6
7	8	9	10	11	12	13
14	15	16	17	18	19	20
21	22	23	24	25	26	27
28	29	30	...	...	...	...
...	...	...	...	...	...	...

JULY.

Sun.	M	T.	W.	T.	F.	Sat.
...	...	...	1	2	3	4
5	6	7	8	9	10	11
12	13	14	15	16	17	18
19	20	21	22	23	24	25
26	27	28	29	30	31	...
...	...	...	...	...	...	...

AUGUST.

Sun.	M.	T.	W.	T.	F.	Sat.
...	...	...	...	...	...	1
2	3	4	5	6	7	8
9	10	11	12	13	14	15
16	17	18	19	20	21	22
23	24	25	26	27	28	29
30	31	...	...	...	...	...

SEPTEMBER.

Sun.	M.	T.	W.	T.	F.	Sat.
...	...	1	2	3	4	5
6	7	8	9	10	11	12
13	14	15	16	17	18	19
20	21	22	23	24	25	26
27	28	29	30	...	...	...
...	...	...	...	...	...	...

OCTOBER.

Sun.	M.	T.	W.	T.	F.	Sat.
...	...	...	...	1	2	3
4	5	6	7	8	9	10
11	12	13	14	15	16	17
18	19	20	21	22	23	24
25	26	27	28	29	30	31

NOVEMBER.

Sun.	M.	T.	W.	T.	F.	Sat.
1	2	3	4	5	6	7
8	9	10	11	12	13	14
15	16	17	18	19	20	21
22	23	24	25	26	27	28
29	30	...	...	...	...	...

DECEMBER.

Sun.	M.	T.	W.	T.	F.	Sat.
...	...	1	2	3	4	5
6	7	8	9	10	11	12
13	14	15	16	17	18	19
20	21	22	23	24	25	26
27	28	29	30	31	...	...

CALENDAR.

1864.

JANUARY.

Sun.	M.	T.	W.	T.	F.	Sat.
...	...	...	...	...	1	2
3	4	5	6	7	8	9
10	11	12	13	14	15	16
17	18	19	20	21	22	23
24	25	26	27	28	29	30
31	...	...	...	...	...	...

FEBRUARY.

Sun.	M.	T.	W.	T.	F.	Sat.
...	1	2	3	4	5	6
7	8	9	10	11	12	13
14	15	16	17	18	19	20
21	22	23	24	25	26	27
28	29	...	...	...	...	...
...	...	...	...	...	...	...

MARCH.

Sun.	M.	T.	W.	T.	F.	Sat.
...	...	1	2	3	4	5
6	7	8	9	10	11	12
13	14	15	16	17	18	19
20	21	22	23	24	25	26
27	28	29	30	31	...	...
...	...	...	...	...	...	...

APRIL.

Sun.	M.	T.	W.	T.	F.	Sat.
...	...	...	...	...	1	2
3	4	5	6	7	8	9
10	11	12	13	14	15	16
17	18	19	20	21	22	23
24	25	26	27	28	29	30

MAY.

Sun.	M.	T.	W.	T.	F.	Sat.
1	2	3	4	5	6	7
8	9	10	11	12	13	14
15	16	17	18	19	20	21
22	23	24	25	26	27	28
29	30	31	...	...	...	...

JUNE.

Sun.	M.	T.	W.	T.	F.	Sat.
...	...	...	1	2	3	4
5	6	7	8	9	10	11
12	13	14	15	16	17	18
19	20	21	22	23	24	25
26	27	28	29	30	...	...

JULY.

Sun.	M.	T.	W.	T.	F.	Sat.
...	...	...	...	...	1	2
3	4	5	6	7	8	9
10	11	12	13	14	15	16
17	18	19	20	21	22	23
24	25	26	27	28	29	30
31	...	...	...	...	...	...

AUGUST.

Sun.	M.	T.	W.	T.	F.	Sat.
...	1	2	3	4	5	6
7	8	9	10	11	12	13
14	15	16	17	18	19	20
21	22	23	24	25	26	27
28	29	30	31	...	...	...
...	...	...	...	...	...	...

SEPTEMBER.

Sun.	M.	T.	W.	T.	F.	Sat.
...	...	...	...	1	2	3
4	5	6	7	8	9	10
11	12	13	14	15	16	17
18	19	20	21	22	23	24
25	26	27	28	29	30	...
...	...	...	...	...	...	...

OCTOBER.

Sun.	M.	T.	W.	T.	F.	Sat.
...	...	...	...	...	...	1
2	3	4	5	6	7	8
9	10	11	12	13	14	15
16	17	18	19	20	21	22
23	24	25	26	27	28	29
30	31	...	...	...	...	...

NOVEMBER.

Sun.	M.	T.	W.	T.	F.	Sat.
...	...	1	2	3	4	5
6	7	8	9	10	11	12
13	14	15	16	17	18	19
20	21	22	23	24	25	26
27	28	29	30	...	...	...
...	...	...	...	...	...	...

DECEMBER.

Sun.	M.	T.	W.	T.	F.	Sat.
...	...	...	...	1	2	3
4	5	6	7	8	9	10
11	12	13	14	15	16	17
18	19	20	21	22	23	24
25	26	27	28	29	30	31
...	...	...	...	...	...	...

CALENDAR.

1865.

JANUARY.

Sun.	M.	T.	W.	T.	F.	Sat.
1	2	3	4	5	6	7
8	9	10	11	12	13	14
15	16	17	18	19	20	21
22	23	24	25	26	27	28
29	30	31	...	...	...	...

FEBRUARY.

Sun.	M.	T.	W.	T.	F.	Sat.
...	...	...	1	2	3	4
5	6	7	8	9	10	11
12	13	14	15	16	17	18
19	20	21	22	23	24	25
26	27	28	...	...	...	...

MARCH.

Sun.	M.	T.	W.	T.	F.	Sat.
...	...	...	1	2	3	4
5	6	7	8	9	10	11
12	13	14	15	16	17	18
19	20	21	22	23	24	25
26	27	28	29	30	31	...

APRIL.

Sun.	M.	T.	W.	T.	F.	Sat.
...	...	...	...	...	...	1
2	3	4	5	6	7	8
9	10	11	12	13	14	15
16	17	18	19	20	21	22
23	24	25	26	27	28	29
30	...	...	...	...	...	...

MAY.

Sun.	M.	T.	W.	T.	F.	Sat.
...	1	2	3	4	5	6
7	8	9	10	11	12	13
14	15	16	17	18	19	20
21	22	23	24	25	26	27
28	29	30	31	...	...	...
...	...	...	...	...	...	...

JUNE.

Sun.	M.	T.	W.	T.	F.	Sat.
...	...	...	...	1	2	3
4	5	6	7	8	9	10
11	12	13	14	15	16	17
18	19	20	21	22	23	24
25	26	27	28	29	30	...
...	...	...	...	...	...	...

JULY.

Sun.	M.	T.	W.	T.	F.	Sat.
...	...	...	...	...	...	1
2	3	4	5	6	7	8
9	10	11	12	13	14	15
16	17	18	19	20	21	22
23	24	25	26	27	28	29
30	31	...	...	...	...	...

AUGUST.

Sun.	M.	T.	W.	T.	F.	Sat.
...	...	1	2	3	4	5
6	7	8	9	10	11	12
13	14	15	16	17	18	19
20	21	22	23	24	25	26
27	28	29	30	31	...	...
...	...	...	...	...	...	...

SEPTEMBER.

Sun.	M.	T.	W.	T.	F.	Sat.
...	...	...	...	...	1	2
3	4	5	6	7	8	9
10	11	12	13	14	15	16
17	18	19	20	21	22	23
24	25	26	27	28	29	30
...	...	...	...	...	...	...

OCTOBER.

Sun.	M.	T.	W.	T.	F.	Sat.
1	2	3	4	5	6	7
8	9	10	11	12	13	14
15	16	17	18	19	20	21
22	23	24	25	26	27	28
29	30	31	...	...	...	...
...	...	...	...	...	...	...

NOVEMBER.

Sun.	M.	T.	W.	T.	F.	Sat.
...	...	...	1	2	3	4
5	6	7	8	9	10	11
12	13	14	15	16	17	18
19	20	21	22	23	24	25
26	27	28	29	30	...	...
...	...	...	...	...	...	...

DECEMBER.

Sun.	M.	T.	W.	T.	F.	Sat.
...	...	...	...	...	1	2
3	4	5	6	7	8	9
10	11	12	13	14	15	16
17	18	19	20	21	22	23
24	25	26	27	28	29	30
31	...	...	...	...	...	...

OPERATIONS ON THE POTOMAC AND RAPPAHANNOCK RIVERS.

FROM DECEMBER 7, 1861, TO JULY 31, 1865.

OPERATIONS ON THE POTOMAC AND RAPPAHANNOCK RIVERS.

FROM DECEMBER 7, 1861, TO JULY 31, 1865.

Report of Lieutenant Wyman, U. S. Navy, of having assumed command of the Potomac Flotilla.

U. S. S. HARRIET LANE,
Potomac River, December 7, 1861.

SIR: In obedience to your order of the 5th instant, I yesterday assumed command of the Potomac Flotilla.

I am, sir, very respectfully, your obedient servant,

R. H. WYMAN,
Lieutenant, Commanding Potomac Flotilla.

Hon. GIDEON WELLES,
Secretary of the Navy.

Report of Lieutenant Wyman, U. S. Navy, commanding Potomac Flotilla, of attack upon the enemy's pickets near Freestone Point, Va.

U. S. S. HARRIET LANE,
Off Mattawoman Creek, December 9, 1861.

SIR: I have the honor to report to you that this morning about 9:30 o'clock, seeing the enemy's pickets, three camp wagons, and a mounted officer coming down the road to the southward of Freestone Point and halting at some buildings near the beach, I directed the steamers *Jacob Bell* and *Anacostia* to shell and burn the buildings. I stood in with this vessel as far as her draft of water would admit to protect them, in event of the enemy bringing a field battery to Freestone Point.

After shelling the buildings and hill and driving back the pickets, Lieutenant-Commander McCrea landed with a few men and fired four houses, which have since burned to the ground. They contained sutler's stores, flour, etc. As eighteen hours elapsed before the fires subsided, I judge that the quantity of stores must have been considerable. The enemy fired but a few musket shot.

I am, sir, very respectfully, your obedient servant,

R. H. WYMAN,
Lieutenant, U. S. Navy, Commanding Potomac Flotilla.

Hon. GIDEON WELLES,
Secretary of the Navy.

Report of Lieutenant Wyman, U. S. Navy, commanding Potomac Flotilla, transmitting report of Acting Master Street, U. S. Navy, commanding U. S. schooner Dana, regarding affairs on the lower Potomac.

U. S. S. HARRIET LANE,
Potomac Flotilla, December 12, 1861.

SIR: I have the honor to report that the enemy have placed in battery several fieldpieces to the westward of Boyd's Hole and nearly opposite to Maryland Point. Means have been taken to direct all vessels to keep close to the Maryland shore in passing this battery.

At Potomac Creek some work is going on, sounding at night like the beating of boiler iron.

It has been reported to me that a contraband from the Lower Machodoc states that on Saturday night last a small steamer sheathed with sheet iron was brought from the Rappahannock to the Lower Machodoc on wheels, and is intended to carry goods across the Potomac; that she had a small gun (howitzer) and was supplied with small arms. I have taken all precautions at my command as regards her. I enclose herewith a copy of a report of Master's Mate W. T. Street, commanding schooner *Dana*, in which several persons are accused of being engaged in conveying goods, etc., from Maryland to Virginia.

On reconnoitering the banks of the river this morning, a foraging party with wagons was discovered on a farm about 2 miles above Occoquan Bay. Two shells were thrown amongst them, which only served to drive them out of range.

I neglected to mention that the new battery near Boyd's Hole is supported by a regiment encamped on the farm of Colonel Tayloe and the farm adjoining, out of the range of our guns.

I am, sir, very respectfully, your obedient servant,

R. H. WYMAN,
Lieutenant, U. S. Navy, Commanding Potomac Flotilla.

Hon. GIDEON WELLES,
Secretary of the Navy.

[Enclosure.]

U. S. CUTTER DANA,
Off Blakistone Island, December 11, 1861.

SIR: Yesterday morning I left Blakistone Island to search the creeks between Breton's Bay and Piney Island [Point?] for boats that I had received information had been in the habit of crossing to Virginia. I anchored off Poplar Hill Creek, took my small boat, and proceeded up the creek, but found nothing but a small flatboat that was entirely worthless. I again got underway and dropped down to Bley Creek, immediately opposite to Ragged Point. This creek is a much larger one than Poplar Hill and better suited as a place of embarking, there being a road down to the beach, which had been evidently used lately for that purpose. I was told on shore that the boats that cross here come from Virginia. I did not find any boats in this creek, nor who the parties were who are engaged in the business. It being calm, I could not proceed any farther. I concluded to lie there all night. At 8 p. m. I saw a white light down the river. Supposing it to be the U. S. schooner *Bailey* signaling for me, I sent my boat to her, as I could not get underway. While absent the wind sprang up and ran the vessel up to me. She proved to be the *Bailey*, which came to anchor close by. Captain Gray came on board and reported that he had five contraband

negroes on board from Lower Machodoc, Va. He wished me to go on board and question them, as they had some important information from there. I accordingly went on board and saw Henry Lewis, belonging to Dr. Brown; Parker Smith, belonging to Mr. Dailey, of Kinsale; Frederick Johnson and Robert Mealy, belonging to Mr. Bailey, and John Smith, who stated that last Saturday night a small steamboat was hauled on wheels from the Rappahannock to Machodoc Creek, on the Potomac, and that it has a small cannon on board and a hundred muskets. Smith says it is built of wood and sheathed with sheet iron and is intended to carry goods across the Potomac, but I received information about a month ago from a contraband that they intended to come out and try to take my vessel; he also states that they have pickets on Ragged Point and that [at] the church near Kinsale there are 500 men camped with four cannon; all of the contrabands confirmed the above. Mr. Gray also received information at Piney Point that there were goods in a fish house at the mouth of Floods Creek to be taken to Virginia. The place being on my station, I proceeded thither in company with the *Bailey*, arriving off the creek at 12 o'clock at night, but not thinking it advisable to land until daylight. After getting an early breakfast we went on shore with a boat's crew from each vessel and were met by John Hanson (colored), belonging to Mr. Able, who gave us the following information: That there were two boats at the head of the creek, one belonging [to] Mr. T. W. Gough and the other to Mr. Matingly, and that they went over to Virginia last Friday night, rowed by William Dims, belonging to T. W. Gough; John Gordon (colored), Wat Barnes, John Bradmar, Ned Downs, and Ned Owens, all negroes. I accordingly took four of my men with four from the *Bailey* and went up the creek for the boats. I found them as stated. The oars were hidden in the woods; the rowlocks are muffled with sheepskins. I sent the boats up by Captain Gray, who will give you any information you may desire. The parties who are engaged in conveying the goods to Virginia are T. W. Gough, Mr. Matingly, John Blackiston [Blakistone?], jr., N. Ford, Mr. Phinick, Mr. Dills, George Simms and brother, and Mr. Moore. Mr. T. W. Gough also uses his teams to haul the goods from Leonardtown. This information is from William Lawrence (colored) and confirmed by all the colored people in the neighborhood.

Waiting for further instructions,

I remain, most respectfully, your obedient servant,

WM. T. STREET,
Acting Master's Mate, Commanding Dana.

[Lieutenant R. H. WYMAN,
Commanding Potomac Flotilla.]

[Telegram.]

NAVY YARD [WASHINGTON, D. C.], *December 12, 1861—8 a. m.*

The *Stepping Stones* is up from below; went into the Occoquan yesterday to reconnoiter; was fired at with musketry and some fieldpieces, which was returned from a howitzer. Vessel hit by two or three musket balls only; got 3 miles up the creek, and when fired at sent a shell over the village; got 4½ feet water.

J. A. DAHLGREN.

NAVY DEPARTMENT.

Report of commandant navy yard, Washington, transmitting report from Lieutenant Wyman, U. S. Navy, commanding Potomac Flotilla, regard- the cutting out of steamer George Page.

COMMANDANT'S OFFICE, NAVY YARD,
Washington, December 16, 1861.

SIR: I have the honor to acknowledge the reference to me by the Department of a volunteer on the part of certain seamen to cut out the *Page*.

Not being possessed of the information necessary to form a judgment as to the practicability of such an attempt, I referred the paper to the commander of the flotilla. His answer is herewith enclosed, which I respectfully submit. I also return the letter of the seamen, and have the honor to be,

Very respectfully, your obedient servant,
JNO. A. DALGHREN,
Commandant.

Hon. GIDEON WELLES,
Secretary of the Navy.

[Enclosures.]

U. S. S. HARRIET LANE,
Potomac Flotilla, December 15, 1861.

SIR: In answer to your reference for my opinion in regard to the practicability of cutting out the *Page*, I will first give you her present position as nearly as I have been able to acquaint myself with it.

The enemy, considering that the *Page* was unsafe in Quantico Creek, have recently taken her to Chopawamsic Creek, just below the Shipping Point, where she can lay farther up and be better protected. From the statement of a deserter, it appears that they have anticipated an attack upon her and have thrown up an earthwork and planted a field battery to resist such, should it be attempted, and that quite a large body of men have been stationed in her immediate vicinity. The Shipping Point batteries are on the right, and I have every reason to know that they are very vigilant in these. The steamer's own guns must command the approach. The creek being perhaps 150 yards wide where I suppose the *Page* lays, could be well protected by musketry on each bank. There is also a small island at the entrance, or just within the entrance of the creek.

From the above, and placed as she is in the immediate vicinity of a large force, it appears to me that the chances would be very much against success, and therefore that it would be impracticable to attempt it.

I am, sir, very respectfully, your obedient servant,
R. H. WYMAN,
Lieutenant, U. S. Navy, Commanding Potomac Flotilla.

Captain J. A. DAHLGREN,
Commandant Navy Yard, Washington.

U. S. NAVY YARD, WASHINGTON,
December 9, 1861.

SIR: We, the men composing Lieutenant Foxhall A. Parker's howitzer brigade at the Washington navy yard, respectfully ask of you to give Lieutenant Parker permission to take us down the river and cut out the pirate *George Page*, now lying in the mouth of Quantico Creek.

We have every confidence in our ability to do so, and also in Lieutenant Parker's skill and bravery, and are willing in a body to follow wherever he leads.

Hoping that your honor will take the foregoing humble request into due consideration, meanwhile we anxiously await a favorable reply,

We are, respectfully, your obedient servants,

PETER THOMPSON,
HENRY A. DAVIS,
W. ALLEN,
EDWARD DIRHAM,
Captains of the Guns for their Respective Crews.

Hon. GIDEON WELLES,
Secretary of the Navy.

Letter from the Secretary of the Navy to Lieutenant Wyman, U. S. Navy, commanding Potomac Flotilla, regarding reported infringement of blockade.

NAVY DEPARTMENT, *December 16, 1861.*

SIR: Captain Shore, of the steamer *Chamberlin*, called at the Department to-day and made the following verbal statement, viz:

I was coming up the river on Wednesday last; a flag was raised on Piney Point light-house, and I went in. Mrs. Marshall, the keeper of the light, wished me to report that five or six boat loads of rebels crossed over every night into Virginia with provisions, etc.; that there was $10,000 worth of goods, ammunition, clothing, etc., in the woods just above the light-house to be carried over. Men came to her every day and asked her if any of the United States cutters were about, and told her she had better keep away as they intended to destroy the light-house. The rebels have a small steamer in the creek just above Ragged Point which they brought from Fredericksburg.

Captain Shore also states that a small boat with provisions crossed over at Ragged Point at 12 o'clock, m.

Two of our vessels were lying at Blakistone Island and could have seen this boat.

I am, respectfully, etc.,

GIDEON WELLES.

Lieutenant R. H. WYMAN,
Commanding Potomac Flotilla.

Report of Lieutenant Wyman, U. S. Navy, commanding Potomac Flotilla, regarding Confederate batteries at Boyd's Hole and Lower Shipping Point, Va.

U. S. S. HARRIET LANE,
Potomac Flotilla, December 18, 1861.

SIR: I have the honor to report that last evening the enemy opened a battery of two heavy guns at Boyd's Hole, the field battery which I before reported having been withdrawn. Their range extends well inside the Maryland shore. I have also reason to believe that another battery is in course of construction in the vicinity of Hoar's [Hoe's?] house, across the neck of land which forms the Chopawamsic Creek. A reconnoissance has been made, but no response to our fire. The enemy have placed an additional gun on the southern face of the Lower Shipping Point battery, which has exploded a shell over Sandy Point,

a distance of 2¾ miles. From what information I can gather I am led to believe that the greater part (if not all) of the goods, etc., carried into Virginia are brought from Baltimore to the Patuxent.

I am, sir, very respectfully, your obedient servant,

R. H. WYMAN,
U. S. Navy, Commanding Potomac Flotilla.

Hon. GIDEON WELLES,
Secretary of the Navy.

Report of Lieutenant Wyman, U. S. Navy, commanding Potomac Flotilla, regarding reported location of the enemy's force.

POTOMAC FLOTILLA, *December 20, 1861.*

SIR: The country in the neighborhood of Piney Point and Point Lookout has been overhauled, and as yet nothing of a suspicious nature found. There are rumors there that the enemy are collecting quite a force at Currioman Bay and its branches, intending to cross in boats. Though I look upon this as mere talk, there will be a lookout kept on them. The enemy's cavalry scout frequently as far as Pohick Creek, and show themselves on Hallowing Point, but have not lately been on the farms below. I have been informed by slaves that a gunning sloop has been in the habit of passing around into the Occoquan, and selling whisky, etc. Her name I could not ascertain, but the names of the men in her were said to be Thomas Hewitt and ——— Pearson. Should she slip by me, information respecting her might be obtained by those on board the *Perry*, off Alexandria.

From the same source, I am informed that the enemy's force does not extend on this side of the Occoquan River, but that they have built a fort a short distance below the Occoquan Mills (this I have seen myself some little distance from the road), and also that they are still working at fortifications.

Their firing from the batteries is constantly kept up, but no damage done as yet. Last night a schooner was becalmed for nearly two hours off the Shipping Point batteries, and the damage she sustained amounted to two holes through her mainsail.

I this moment see by a newspaper that the man Hewitt has been arrested by the *Perry*.

I applied a short time since for an assistant surgeon for the lower portion of the flotilla; he is much needed. At Blakistone Island it was found necessary to place one of the *Jacob Bell's* crew under charge of a physician on shore, there being no surgeon below on the *Freeborn*, and neither surgeon nor medicine below Mathias Point.

I am, sir, very respectfully, your obedient servant,

R. H. WYMAN,
Lieutenant, Commanding Potomac Flotilla.

Hon. G. V. FOX,
Assistant Secretary of the Navy.

Report of Lieutenant Wyman, U. S. Navy, commanding Potomac Flotilla, regarding transportation of supplies for his command.

U. S. S. HARRIET LANE,
Potomac Flotilla, December 20, 1861.

SIR: I would respectfully suggest to the Department that the provisions, clothing, etc., for the use of the vessels of this flotilla stationed

below the batteries opposite Budd's Ferry be sent from Baltimore and that one of the schooners (without armament), now stationed below, be anchored at Liverpool Point, and used as a store vessel.

This arrangement, I judge, will not only be more economical as regards transportation, but most convenient, and will save the risk of running these stores past the rebel batteries, as also that of the communication by water being cut off by the freezing of the river above.

I am, sir, very respectfully, your obedient servant,

R. H. WYMAN,
Lieutenant, U. S. Navy, Commanding Potomac Flotilla.

Hon. GIDEON WELLES,
Secretary of the Navy.

Report of Lieutenant Wyman, U. S. Navy, commanding Potomac Flotilla, regarding the detention of a party of ladies and children.

U. S. S. HARRIET LANE,
Potomac Flotilla, December 20, 1861.

SIR: I have the honor to inform you that three ladies and two children were taken on the night of the 18th in the middle of the river (below Mathias Point) on their way to Virginia. They assert that they were on their way to join their husbands in Virginia. Their names are as follows: Mrs. Ellery and child, Mrs. Cantatore, Mrs. E. Piper and child. Their baggage has been searched and no letters, papers, or contraband of war found in it. I enclose also their certificate to that effect, as also to nothing being concealed about their persons. They are at present detained on board the schooner *Cobb* at Piney Point, where they will remain until I receive your instructions regarding them.

I am, very respectfully, your obedient servant,

R. H. WYMAN,
Lieutenant, U. S. Navy, Commanding Potomac Flotilla.

Hon. GIDEON WELLES,
Secretary of the Navy.

[Enclosure.]

Certificate.

U. S. S. JACOB BELL,
Piney Point, December 19, 1861.

We, the undersigned, do give our most solemn word and honor that nothing contained in our trunks, boxes, or parcels contain any letters, papers, or articles intended for the use or comfort of the enemy, and nothing contraband of war, or about our persons.

S. M. CANTATORE,
JULIA ELLERY,
E. PIPER,
Ladies.

Witnesses:
E. P. MCCREA,
Lieutenant, Commanding.
A. J. FRANK,
Acting Master, U. S. Navy.

Order of the Secretary of the Navy to Lieutenant Wyman, U. S. Navy, commanding Potomac Flotilla, to release ladies and children detained on board U. S. schooner Howell Cobb.

NAVY DEPARTMENT, *December 21, 1861.*

SIR: Your communication of the 20th instant, reporting the arrest of certain ladies and children while attempting to pass into Virginia, has been received. You will release the parties, cautioning them that if they are again taken in a like attempt they will be held and treated as prisoners.

I am, respectfully, your obedient servant,

GIDEON WELLES,
Secretary of the Navy.

Lieutenant R. H. WYMAN,
Commanding Potomac Flotilla.

Order of the Secretary of the Navy to Lieutenant Wyman, U. S. Navy, commanding Potomac Flotilla, relative to protection of building at Freestone Point, Va., enclosing letter from Samuel Cropley, esq.

NAVY DEPARTMENT, *December 21, 1861.*

SIR: I enclose herewith a copy of a communication from Mr. Samuel Cropley, of Georgetown, D. C., relative to a building at Freestone Point containing his fishing outfit and asking the Department's protection of the same, which it is desired you will do, so far as the flotilla is concerned.

I am, respectfully, your obedient servant,

GIDEON WELLES,
Secretary of the Navy.

Lieutenant R. H. WYMAN,
Commanding Potomac Flotilla.

[Enclosure.]

GEORGETOWN, D. C., *December 17, 1861.*

DEAR SIR: My attention was called to the published report of Lieutenant Commanding R. H. Wyman, of the Potomac Flotilla, who sent Lieutenant McCrea ashore at the Freestone Point fishing landing, who set fire to some buildings on said fishing shore.

I immediately went down the river in sight of the landing, to ascertain whether all the buildings were burned. I found one still standing, and that fortunately contains my entire outfit of seine, rope, etc., of a value to me of some thousands of dollars. My object in troubling you with this note is to ask the favor of you to shield with your protection that building, which is filled, as stated, with my seine, rope, barrels, salt vats, etc.

I, for some years, have been the lessee of the Freestone Point fishery; am a resident and merchant of this town.

I remain, very respectfully, your obedient servant,

SAM'L CROPLEY.

Hon. GIDEON WELLES,
Secretary of the Navy, Washington City.

Letter from Caleb S. Wright, esq., to the Assistant Secretary of the Navy, offering free transportation to troops for the capture of a battery at Hallowing Point.

WILLARD'S HOTEL,
Washington City, December 25, 1861.

DEAR SIR: I am the owner of steamers *Volunteer* and *Reindeer*, running daily from foot of Eleventh street to Rum Point, on Mattawoman Creek, but am in dread constantly of a rebel battery now or about to be erected at Hallowell [Hallowing] Point, 6 or 8 miles below Mount Vernon, they having possession there, as rebel cavalry and soldiers are seen there daily. It is the most dangerous point on the river, and would be a complete blockade of the river, as vessels drawing 6 feet are obliged to pass within a quarter of a mile of the shore. If the Government desires to land 1,000 men there to protect it, I will transport them from here or General Hooker's division for nothing, immediately, if they require it.

CALEB S. WRIGHT.

Mr. FOX.

Report of Lieutenant Wyman, U. S. Navy, commanding Potomac Flotilla, requesting the presence of an armed launch in Chicomuxen Creek.

POTOMAC FLOTILLA, *December 27, 1861.*

SIR: To guard against the boats belonging to the enemy coming out of the creeks near their batteries and attacking any of our schooners which may be passing within their reach (as I have no steamer suitable to place in the Chicomuxen Creek), I would respectfully request that I may be furnished from the navy yard a light launch, with gun, with gun crew, and competent officer, and a rough board house with stove for their accommodation. My plan would be to place the boat and crew permanently in Chicomuxen Creek, out of range of the enemy's guns, moving her out at night to protect our vessels in passing.

I am, sir, very respectfully, your obedient servant,

R. H. WYMAN,
Lieutenant, Commanding Potomac Flotilla.

Hon. GIDEON WELLES,
Secretary of the Navy.

[Endorsement.]

DECEMBER 28.

There will be no difficulty in providing the launch, gun, and little house, but there are so few seamen left in the yard that a pressing emergency can hardly be met to man a gun.

Very respectfully,

J. A. DAHLGREN.

Report of Captain Morris, U. S. Navy, commanding U. S. S. Pensacola, suggesting means for the safe passage of that vessel by the river batteries.

U. S. [STEAM] SLOOP PENSACOLA,
Off Alexandria, Va., December 28, 1861.

SIR: I am of the opinion that it will be necessary for me to have two large scows loaded with wet hay to lash alongside of my ship to protect her machinery going down the river from the batteries. I am

informed that the Army have suitable scows. If we could procure the loan of two of them, of about 75 or 100 feet in length each, they would be of great service to us for that purpose.

Very respectfully, your obedient servant,

HENRY W. MORRIS,
Captain.

Hon. GIDEON WELLES,
Secretary of the Navy, Washington, D. C.

Letter from the Assistant Secretary of the Navy to the Quartermaster-General of the Army, requesting the use of two scows.

NAVY DEPARTMENT, *December 28, 1861.*

I have to request that you will loan the Department two scows belonging to your Department, and a quantity of hay to fill them for the purpose of lashing the scows to the steamer *Pensacola* to protect her machinery in passing the batteries on the Potomac.

I am, respectfully, etc.,

G. V. FOX,
Assistant Secretary.

Brigadier-General M. C. MEIGS.

Order of Lieutenant McCrea, U. S. Navy, commanding U. S. S. Jacob Bell, to Acting Master's Mate Street, U. S. Navy, commanding U. S. schooner Dana, to proceed to Nanjemoy for assistance.

U. S. S. JACOB BELL, *December 28, 1861.*

SIR: You will get underway, if possible, and go as near Nanjemoy shores as possible, and proceed to said shores and inform the officer commanding the guard that the dispatches must be sent immediately to Commander Magaw. I am on shore and need assistance.

Should you pass any steamer on the way, you will send her back to Captain Magaw. If they protest, tell them a military necessity demands it. If they still persist, make her go.

Yours,

E. P. MCCREA.

Master's Mate W. T. STREET,
Commanding Dana.

Letter from the Secretary of the Navy to Lieutenant Wyman, U. S. Navy, commanding Potomac Flotilla, relative to the chasing of the steamer Chamberlin by a steamer below Ragged Point, Potomac River.

NAVY DEPARTMENT, *December 28, 1861.*

SIR: I enclose herewith for your information a letter* addressed to the Department by Captain E. Shore, of the *Chamberlin*, in which he states he was chased by a steamer that came out from the Virginia shore below Ragged Point on the Potomac.

I am, respectfully, your obedient servant,

GIDEON WELLES.

Lieutenant R. H. WYMAN,
Commanding U. S. Potomac Flotilla.

---

*Not found.

Letter from the Secretary of the Navy to Lieutenant Wyman, U. S. Navy, commanding Potomac Flotilla, transmitting enclosure regarding steamer George Page.

NAVY DEPARTMENT, *December 28, 1861.*

SIR: I herewith transmit for your information a copy of a letter from Assistant Adjutant-General S. Williams and also a copy of its enclosure from Brigadier-General Hooker, in relation to affairs on the Potomac.

I am, respectfully, your obedient servant,

GIDEON WELLES.

Lieutenant R. H. WYMAN,
Commanding Potomac Flotilla.

[Enclosure.]

HEADQUARTERS ARMY OF THE POTOMAC,
Washington, December 27, 1861.

SIR: By direction of the commanding general, I have the honor to enclose an extract from a letter received from Brigadier-General Hooker, commanding our forces on the lower Potomac, which is respectfully furnished for the information of the honorable Secretary of the Navy.

I am, very respectfully, your obedient servant,

S. WILLIAMS,
Assistant Adjutant-General.

Captain G. V. FOX,
Assistant Secretary of the Navy.

[Subenclosure.]

HEADQUARTERS HOOKER'S DIVISION,
Camp Baker [Md.], December 22, 1861.

GENERAL: * * * I have nothing to apprehend in the passage of stores from one to the other from the batteries. From the steamer *Page* I have more. She has removed to her old anchorage in the Quantico, and on any dark night may slip out and pick up some of our boats. I shall, of course, take every precaution in my power to prevent it, but if some of the vessels of the flotilla would take a proper position above and below the mouth of the Quantico, and near it (which they can do with impunity any night when the moon is not shining), they might cut off her retreat.

It has been reported to me since dark that a schooner has been damaged to-day in ascending the river, opposite to Boyd's Hole. If so, it must have been from the field battery on that shore. Vessels should arrange to pass along here at night. When last seen [line cut off] not be true.

I am, very respectfully, your obedient servant,

JOSEPH HOOKER,
Brigadier-General, Commanding Division.

Brigadier-General S. WILLIAMS,
Assistant Adjutant-General, Washington, D. C.

Report of Lieutenant Wyman, U. S. Navy, commanding Potomac Flotilla, responding to letters received from the Department.

U. S. S. HARRIET LANE,
Potomac Flotilla, December 31, 1861.

SIR: I have the honor to acknowledge the receipt of letters from the Department of the 27th and 28th instant, enclosing an extract of a letter

from Brigadier-General Hooker and a letter from Captain Shore, of steamer *Chamberlin*. With regard to the former I would state that the rebel steamer *Page* is closely watched by the vessels of the flotilla, that every protection has been given to army transports, and in some instances their schooners have been towed by the batteries, and those vessels without arms furnished with them for the trip. The schooner *Mary Willis*, loaded with wood, was struck below the water line on the 22d, by shot from the field battery at Boyd's Hole, and was run on the flats. I made no report of it to the Department, being in hopes of succeeding in getting her afloat. This vessel was hailed and warned not to attempt to pass the battery by day—by the scouts or pickets at Nanjemoy—but paid no attention to the warning. Captain [Wm. S.] McClure, of the Indiana pickets in that vicinity, states that when the captain of this vessel came on shore he said he wondered why they (the enemy) should fire at him; he was no damned Yankee.

The report of Captain Shore I am inclined to discredit entirely (but have instituted an investigation), and believe that he was running away from one of our steamers, as about that time the *Jacob Bell* visited Ragged Point and the Lower Machodoc, where she could discover nothing, or it might have been the *Murray* with two launches in tow, which his fears transformed into the rebel steamer. The *Herbert* and *Murray* have been sent below on their way out of the river. The letters of discharge will be dated by Lieutenant-Commander McCrea on his delivering them to them below, and I will inform the Department as soon as I receive notice of their date of leaving.

I find that the only safe ice harbor below White House is Mattawoman Creek. Vessels drawing 9 feet can go far enough up that creek to be perfectly secure from drift ice or the possibility of being carried away by the ice.

I am, sir, very respectfully, your obedient servant,

R. H. WYMAN,
Lieutenant, Commanding Potomac Flotilla.

Hon. G. V. FOX,
Assistant Secretary of the Navy.

Report of Lieutenant Wyman, U. S. Navy, commanding Potomac Flotilla, regarding tugs hired by the Department.

POTOMAC FLOTILLA, *January 2, 1862.*

SIR: I have the honor to report to the Department that the hired steam tugs *Herbert* and *Murray* were discharged and left the Potomac River on the 30th of December. I would call the attention of the Department to Mr. Charles Bentrick, the master of the *Herbert*, having been appointed and still holding the appointment of master's mate.

I am, sir, very respectfully, your obedient servant,

R. H. WYMAN,
Lieutenant, Commanding Potomac Flotilla.

Hon. GIDEON WELLES,
Secretary of the Navy.

Report of Lieutenant Wyman, U. S. Navy, commanding Potomac Flotilla, of attack by U. S. steamers Anacostia and Yankee, upon Cockpit Point battery.

POTOMAC FLOTILLA, *January 3, 1862.*

SIR: Judging that the battery on Cockpit Point could be enfiladed, and wishing to obtain a more complete knowledge of the extent of the enemy's works in that vicinity, I directed the *Anacostia*, Lieutenant Commanding Badger, with the *Yankee*, Lieutenant Commanding Eastman, to stand inside Cockpit Point to the northward and throw their shells into the battery.

In this they were entirely successful, their shells falling directly in the battery, those of the *Anacostia* being planted with the most admirable precision; the guns on the extreme point of the battery were at once abandoned. The only guns which the enemy could at any time bring to bear were an 80-pounder rifle gun and a rifle 12-pounder. Four shots were fired from these as the vessels passed inside of the battery, one of which, from the 80-pounder rifle, passed through the port bow of the *Yankee* and lodged in a berth on the starboard side in the forecastle, doing no damage except very slightly wounding one of the crew (Alexander Mitchell, ordinary seaman) by a piece of lead from the shell being thrown inboard over the rail. On the enemy firing their fourth shot, a 9-inch shell from the *Anacostia* and a 6-inch shell from the *Yankee* were exploded under their gun; almost simultaneously with its flash their gun was dismounted and they abandoned the battery. After firing a few more shell the vessels retired.

On Cockpit Point the enemy have now four or five guns in battery. Their heavy gun has been remounted and moved to the northern face of the battery to prevent another attempt at flanking them. A breastwork for another battery has been thrown up, which will entirely protect them to the northward.

I am, sir, very respectfully, your obedient servant,

R. H. WYMAN,
Lieutenant, Commanding Potomac Flotilla.

Hon. GIDEON WELLES,
Secretary of the Navy.

Order of the Secretary of the Navy to Captain Morris, U. S. Navy, commanding U. S. S. Pensacola, to proceed with that vessel to Hampton Roads.

NAVY DEPARTMENT, *January 9, 1862.*

SIR: As soon as the U. S. steam sloop *Pensacola* is in all respects ready, proceed with her to Hampton Roads and there await further instructions from the Department.

It is important that every precaution should be used to pass the rebel batteries on the Potomac with safety to the vessel and those under your command. The Department relies upon your skill and upon such means as your judgment may dictate to accomplish this object.

I am, respectfully, your obedient servant,

GIDEON WELLES.

Captain H. W. MORRIS,
Commanding U. S. S. Pensacola, off Alexandria, Va.

Report of Lieutenant Wyman, U. S. Navy, commanding Potomac Flotilla, of the capture of three men.

POTOMAC FLOTILLA, *January* [*11*], *1862.*

SIR: I have the honor to report to the Department that I have sent to the navy yard three gentlemen, who were taken on the night of the 9th instant by Lieutenant Commanding McCrea, in attempting to cross from Maryland into Virginia below Mathias Point. Their names are as follows: Rev. Bennet Smedes, of Raleigh, N. C.; John E. Rea, of Baltimore, Md.; George M. Gormly, of Norfolk, Va.

I am, sir, very respectfully, your obedient servant,

R. H. WYMAN,
Lieutenant, Commanding Potomac Flotilla.

Hon. GIDEON WELLES,
Secretary of the Navy.

[Telegram.]

NAVY DEPARTMENT, *January 11, 1862.*

Send a vessel to ascertain if the *Pensacola* has passed the batteries, or any of them.

GIDEON WELLES,
Secretary of the Navy.

Commander J. A. DAHLGREN,
Commandant Navy Yard, Washington.

Report of Captain Morris, U. S. Navy, commanding U. S. S. Pensacola, regarding measures for the safe passage of the batteries on the Potomac.

Unofficial.] U. S. [STEAM] SLOOP PENSACOLA,
At Anchor off White House Point, January 11, 1862—2 p. m.

SIR: I left Alexandria at daylight this morning, as the pilots did not wish to run her down at night on account of the tortuous channel, and anchored here at nearly low water. It will be necessary for us to pass over the shoal of Mattawoman mud at high water,

I shall leave this anchorage to-night at 1 a. m., so as to pass the rebel batteries at moon down.

I have communicated with Lieutenant Commanding R. H. Wyman, of the Potomac Flotilla, and made arrangements with him to anchor some of his vessls at the buoys on the Mattawoman mud, with colored lights up, to enable me to steer by, and also for others to attack the batteries whilst I am passing them, to distract their attention from me.

Very respectfully, your obedient servant

HENRY W. MORRIS,
Captain.

G. V. FOX, Esq.,
Assistant Secretary, Navy Department, Washington, D. C.

Report of commandant navy yard, Washington, regarding the safety of U. S. S. Pensacola.

NAVY YARD, WASHINGON, *January 12, 1862.*

SIR: The steamer which I sent down to the flotilla has returned with news that the *Pensacola* passed the batteries this morning about 5:30

o'clock. Only two guns were fired from Shipping Point and about twenty shot from the lower batteries. Captain Wyman, with his usual forethought, had his steamers at hand to indicate the channel and was prepared to open his guns if needed. The *Pensacola*, however, made no return, and it is believed passed without injury.

I have dispatched another steamer for information, and have the honor to be, very respectfully, your obedient servant,

JNO. A. DAHLGREN.

Hon. GIDEON WELLES,
Secretary of the Navy.

[Telegram.]

U. S. [STEAM] SLOOP PENSACOLA,
At Anchor off Liverpool Point, Sunday Morning, January 12, 1862—6 a. m.

We passed the batteries at Cockpit and Shipping points at 5:45 a. m. without being hit. They fired about fifteen shells at us from the two. Nearly all of them passed over the ship. Their firing was very good, but aimed too high.

HENRY W. MORRIS,
Captain.

Hon. GIDEON WELLES,
Secretary of the Navy.

Report of Captain Morris, U. S. Navy, commanding U. S. S. Pensacola, regarding the safe passage of batteries on Cockpit and Shipping points.

U. S. [STEAM] SLOOP PENSACOLA,
At Anchor off Liverpool Point, January 12, 1862—5:45 a. m.

DEAR SIR: We got abreast of Cockpit Point about 4:30 a. m. That battery fired three shells; the first passed directly over our smoke-stack, and only a little above it. None of their shot or shell struck us.

In passing the batteries of Shipping Point they fired about fifteen shot and shells at us, chiefly shells; most of them passed over the ship in a line from the starboard quarter to the after part of the fore rigging, and little above the tops. None of our rigging was injured or cut away. We did not return their fire at all, as we did not wish to indicate our position.

I have written a short telegraph to the Secretary of the Navy and given it to Lieutenant Commanding Magaw, who will send it to General Hooker to transmit.

Please send this letter to him immediately.

Very respectfully,

HENRY W. MORRIS,
Captain.

Commander J. A. DAHLGREN,
Commandant Navy Yard, Washington, D. C.

[Telegram.]

NAVY YARD [WASHINGTON, D. C.], *January 12, 1861 [1862].*

The *Pensacola* passed Lower Sandy Point, below Mathias Point, at 10 a. m. all right.

F. A. PARKER.

Hon. G. WELLES.

Report of Captain Morris, U. S. Navy, commanding U. S. S. Pensacola, regarding the passage of that vessel down the Potomac.

U. S. [STEAM] SLOOP PENSACOLA,
Past Kettle Bottom Shoals, January 12, 1862.

SIR: After passing below Cockpit and Shipping Point batteries, which I did at a quarter before 5 o'clock this morning, safely, without being struck by the enemy's shot, I anchored at Liverpool Point to wait for daylight to proceed on.

I availed myself of this opportunity to write you a short telegram, which I gave to Lieutenant Commanding Magaw, of the flotilla, to send on shore to Colonel [Charles K.] Graham, of the Army, to forward, informing you that we had passed the enemy's batteries and that we had been fired at fifteen or twenty times, most of their shot passing directly over us, but none hitting us. We were very much favored by the weather, the sky being slightly obscured by the clouds so that after the moon had set, which was at 4:30 a. m., the darkness made us indistinct to them, whilst it was not too dark for us to see the shores of the river and enable us to steer by them and to keep in the channel.

I did not return the enemy's fire, as it would only have exposed my position to them without enabling me to do them any damage, on account of the darkness of the night.

I am very much indebted to Lieutenant Commanding R. H. Wyman for the efficient assistance rendered by him to me, in anchoring some of his vessels at certain points with lights up, which enabled me to steer down the channel with safety, and accompanying me past the batteries with his whole flotilla, ready to open his fire on them if I did mine.

I beg leave to recommend to the favorable notice of the Department my two pilots, Mr. Walters and Mr. Price, for their skillful pilotage of this large ship at night, drawing as she does 19 feet. I hope that a suitable recompense will be made to them.

I am, very respectfully, your obedient servant,

HENRY W. MORRIS,
Captain.

Hon. GIDEON WELLES,
Secretary of the Navy, Washington, D. C.

Report of Captain Morris, U. S. Navy, commanding U. S. S. Pensacola, of the safe arrival of that vessel at Hampton Roads.

U. S. [STEAM] SLOOP PENSACOLA,
At Anchor, Hampton Roads, January 14, 1862.

SIR: I have the honor to report my arrival at this anchorage yesterday afternoon at 3 o'clock.

I regret that I had not this report written in time to send it by the pilots who left the ship to return to Washington very shortly after we anchored. I presume the Department heard of our arrival here through them.

I communicated to the Department our having safely passed the batteries, which dispatch I sent up to the navy yard by the steam tug *Pusey*.

I am, very respectfully, your obedient servant,

HENRY W. MORRIS,
Captain.

Hon. GIDEON WELLES,
Secretary of the Navy, Washington, D. C.

Order of the Secretary of the Navy to Lieutenant Wyman, U. S. Navy, commanding Potomac Flotilla, regarding U. S. S. Harriet Lane.

NAVY DEPARTMENT, *January 18, 1862.*

SIR: You will please have the *Harriet Lane* brought to the Washington navy yard within a week from this time, for the purpose of being repaired and fitted up for the service on which she is to be engaged in the Gulf [of Mexico].

I am, respectfully, your obedient servant,

GIDEON WELLES.

R. H. WYMAN,
Lieutenant, Commanding U. S. Potomac Flotilla.

Report of Lieutenant Wyman, U. S. Navy, commanding Potomac Flotilla, suggesting additions to the force under his command.

POTOMAC FLOTILLA, *February 1, 1862.*

SIR: There was at Annapolis, belonging to the Naval Academy, a cutter fitted with an engine and propeller, and also a convenient light-draft schooner, *Rainbow*. Are these still there and not in use? They would be particularly serviceable in this flotilla; more especially the steam cutter.

I am, sir, very respectfully, your obedient servant,

R. H. WYMAN,
Lieutenant, Commanding Potomac Flotilla.

Hon. G. V. FOX,
Assistant Secretary of the Navy.

Report of Lieutenant Wyman, U. S. Navy, commanding Potomac Flotilla, regarding the examination of schooner Dorothy Haynes.

POTOMAC FLOTILLA, *February 6, 1862.*

SIR: I have the honor to enclose the report of the schooner *Dorothy Haynes*, which succeeded in entering Aquia Creek. She was thoroughly overhauled, and her clearance papers, etc., found to be correct.

I have the honor to be, very respectfully, your obedient servant,

R. H. WYMAN,
Lieutenant, Commanding Potomac Flotilla.

Hon. GIDEON WELLES,
Secretary of the Navy.

[Enclosure.]

Report of schooner Dorothy Haynes, of Baltimore.

JANUARY 26, 1862.

Copy of boarding book.—J. T. Gilley, master; number of enrollment, 153; number of license, 490; date of license, December 27, 1861; tonnage, 60 tons; date of clearance, January 17, 1862. Shippers, E. M. Rosley, Baltimore; William Rogers, Baltimore; Robert Turner, Baltimore. Consignees, S. W. Clankins, Washington, D. C.; Q. F. Crabbles & Co., Washington, D. C. Cargo, whisky, oil, hay, as per manifest.

E. L. ROBBINS,
Boarding Officer.

[Endorsement.]

It will be seen by the above that the consignees were in all probability fictitious, and this should have been seen at the custom-house.

R. H. WYMAN,
Lieutenant.

[Telegram.]

WASHINGTON NAVY YARD, *February 8, 1862—9 a. m.*

The *Pinola* passed the batteries about 3 this morning. Was not fired at. She went no faster than 8 knots, with 80 revolutions without sail. Water smooth.

JOHN A. DAHLGREN,
Commandant.

NAVY DEPARTMENT.

Report of Lieutenant Wyman, U. S. Navy, commanding Potomac Flotilla, proposing operations against the enemy's batteries.

POTOMAC FLOTILLA, *February 10, 1862.*

SIR: From more recent observation I have reason to believe that the reports of the force of the enemy and their position in the neighborhood of Aquia and Potomac creeks, as reported by me to the Department a few days since, are correct; also that the center and strongest force of their right wing on the river is at and around Dumfries, which is by road 12 miles from the crossing of the road over Potomac Creek and 17 miles to Fookes Landing.

Between Fookes Landing and Boyd's Hole troops can be landed and with but little opposition. Can the embarkation and movements of the troops be conducted in such manner as to conceal their intention from the enemy? I judge that the batteries at Potomac Creek could be taken and the bridge over that creek destroyed before any material reenforcement could arrive from or about Dumfries. On the road from Belle Plain the distance is 7 miles to Fredericksburg. From where the railroad crosses Potomac Creek it is about 5 miles to Fredericksburg; on these roads (as I before stated) are reported to be four or five regiments. I have no information as to what numbers of troops may be concentrated at Fredericksburg.

The greatest difficulty I can foresee in a movement of this kind is the concealing the movement from the enemy while embarking in steamers and boats, with their artillery, in the vicinity of Liverpool, Smith's, and Maryland points, but I believe it can be done, and the flotilla will clear the way for the landing and protect the shore 1½ to 2 miles back.

Again, a feint of landing at Boyd's Hole might be made, and the troops of the enemy being drawn from Dumfries to protect this place, the great body of our troops having been previously on the march to Glymont wharf (where such steamers as the *Baltimore*, etc., can go), could be landed at Freestone Point, thus dividing the right wing of their army, with the option of marching on Occoquan and forming a junction with the left wing of our army, or on Dumfries. Landing can easily be effected above the Occoquan, but that would merely reenforce our left wing and leave the right of the enemy unbroken.

I enclose a rough tracing* of these points, and offer these remarks merely in connection with the points most favorably situated for landing.

At General Hooker's request I shall have an interview with him on Wednesday next.

I am, sir, very respectfully, your obedient servant,

R. H. WYMAN,
Lieutenant, Commanding Potomac Flotilla.

Hon. G. V. FOX,
Assistant Secretary of the Navy.

Letter from the Secretary of the Navy to J. B. Harris, esq., regarding the granting of permits to fishing vessels.

NAVY DEPARTMENT, *February 11, 1862.*

[SIR:] In answer to yours of the 8th instant the Department is willing to grant permits to boats for fishing purposes upon the same conditions as they are granted to other vessels on the Potomac, viz, upon the execution of a bond for each boat of from $500 to $1,000. If you find it necessary to land on the Virginia shore you must get your permission from the Army for that purpose.

This Department can not grant that permission.

Very respectfully,

GIDEON WELLES.

J. B. HARRIS,
Piscataway, Md.

Report of Lieutenant Wyman, U. S. Navy, commanding Potomac Flotilla, of protection extended to loyal citizens.

POTOMAC FLOTILLA, *February 15, 1862.*

SIR: I have forwarded Mr. Philip Otterback, jr., and his wife to Washington from their farm in Virginia, he having claimed our protection. Mr. Otterback states that both himself and wife are Union people, as also both their families; that he has remained as long as possible on his mother's farm in order to protect their property; that he has not aided or assisted the rebels in any manner. Now the rebels threaten his life, having burned some of his outbuildings a few nights since. I have directed Lieutenant Commanding Eastman to go to the Department with Mr. Otterback and to report to yourself.

I am, sir, very respectfully, your obedient servant,

R. H. WYMAN,
Lieutenant, Commanding.

Hon. G. V. FOX,
Assistant Secretary of the Navy.

---

*Not found.

[Telegram.]

NAVY YARD [WASHINGTON, D. C.], *February 15, 1862.*

The *Harriet Lane* passed the batteries about 2 p. m.; also the yard steamer, with ordnance stores for Hatteras.

J. A. DAHLGREN.

NAVY DEPARTMENT.

Report of Acting Master Street, U. S. Navy, U. S. S. Jacob Bell, of the passage of that vessel, with U. S. S. Harriet Lane, by the batteries on the Potomac River.

U. S. S. JACOB BELL,
Potomac Flotilla, February 15, 1862.

SIR: Agreeably to your instruction, I proceeded up to Washington navy yard for repairs. Our new boiler not being ready, it was necessary to have the old one repaired. After blowing off the boiler, it was found requisite to patch it in five places, which was finished on Tuesday, the 11th instant, and at 4 p. m. had steam on and started down, arriving at the upper division at 7 p. m., where I lay until this morning, the night being too light to insure us in passing with safety. While lying below Indian Head the U. S. S. *Harriet Lane* came down. I received orders from Lieutenant Commanding Wyman to follow her when she attempted to run by the batteries, keeping about 600 yards astern. At 10 a. m., during a heavy snowstorm from N. E., the *Harriet Lane* got underway, followed by the *Jacob Bell* and *Baltimore*. We passed the upper battery without being fired upon, but on the approach of the *Lane* to Shipping Point battery the enemy opened fire. I immediately replied with the 68-pounder, with 10-second shell, also with the 32-pounder forward. A number of shell fell around us, but none hitting the *Bell;* the *Harriet Lane*, however, was not so fortunate. She was hit on the port wheelhouse, forcing out the iron rim of the wheel, causing her to stop her engine. Signaling for us to come alongside, we took her in tow to Liverpool Point, where we arrived at 11:30 a. m.

I am, sir, very respectfully, your most obedient servant,

WM. T. STREET,
Executive Officer.

Lieutenant-Commander E. P. MCCREA,
Commanding Second Division Potomac Flotilla.

[Telegram.]

NAVY YARD [WASHINGTON, D. C.], *February 17, 1862.*

The *Baltimore* went down all right; the [*Harriet*] *Lane* got a shot in her wheelhouse, but not much damage. Her iron wheel was bent; she was towed into Liverpool Point by the [*Jacob*] *Bell*, but is right now.

R. H. WYMAN.

NAVY DEPARTMENT.

[Telegram.]

NAVY YARD [WASHINGTON, D. C.], *February 17, 1862.*

The *Pinola* left yesterday at 2 p. m.

J. A. DAHLGREN.

NAVY DEPARTMENT.

[Telegram.]

NAVY YARD [WASHINGTON, D. C.], *February 18, 1862.*

The *Pinola* is reported to have passed the batteries last night.

J. A. DAHLGREN.

NAVY DEPARTMENT.

Report of Lieutenant Wyman, U. S. Navy, commanding Potomac Flotilla, regarding protection extended to three men.

POTOMAC FLOTILLA, *February 23, 1862.*

SIR: Three laboring men, who reside in the vicinity of Hallowing Point, in Virginia, came off to-day, and claimed an asylum, which I have given them. They represent that they are hunted by a body of Texan Rangers on account of their having given information which led to the capture of two men by our pickets a few days since.

I am, sir, very respectfully, your obedient servant,

R. H. WYMAN,
Lieutenant, Commanding Potomac Flotilla.

Hon. GIDEON WELLES,
Secretary of the Navy.

[Telegram.]

POTOMAC FLOTILLA, *March 9, 1862—4 p. m.*

SIR: The Cockpit Point and Shipping Point batteries are abandoned. They have been shelled for an hour without a reply from them. Large fires at Shipping Point and Evansport make it apparent that they are destroying their material there.

The *Page*, also, I believe to have been burned and blown up. Many explosions have occurred.

Very respectfully,

R. H. WYMAN,
Lieutenant, Commanding Potomac Flotilla.

Hon. SECRETARY NAVY.

Report of Lieutenant Wyman, U. S. Navy, commanding Potomac Flotilla, of the abandonment by Confederates of batteries on Cockpit and Shipping points.

POTOMAC FLOTILLA, *March 9, 1862—4 p. m.*

SIR: The information which I forwarded to you by telegraph is, I consider, confirmed. The Cockpit and Shipping Point batteries have been abandoned; they have been shelled for an hour without reply. The enemy have set fire to everything at Shipping Point, and frequent explosions give evidence of the destruction of that ammunition. The fires and explosions extend some distance back between Cockpit and Shipping points.

The *Page* I believe to have been set fire to and blown up.

I am, sir, very respectfully, your obedient servant,

R. H. WYMAN,
Lieutenant, Commanding Potomac Flotilla.

Hon. GIDEON WELLES,
Secretary of the Navy.

[Telegram.]

WASHINGTON NAVY YARD, *March 9, 1862.*
(Received 9 p. m.)

The proposed measures for guarding the Potomac are in progress. I am informed from the Quartermaster's Department that eight canal boats loaded with stone were about to leave, and eight more would leave during the night. I have sent instructions to the commandant of flotilla as to their disposition and use at the three places where the channel has the least depth of water. The only 11-inch gun and 50-pounder which I have will be landed on Giesboro Point before midnight. The platforms will be laid and the guns in position to-morrow morning. The mortars will also be placed. Shot is being cast for all of them, and a full supply will be ready to-morrow. The Secretary of War has visited the defensive points and given me authority to draw on any of the regiments or forts for men, guns, or munitions. He has also authorized me to take for the while the private steamers plying on the river for present use of the Government, and I have sent round for them. If there should be any use at all for a battery on Giesboro there ought to be twenty of the heaviest cannon; shot of 170 pounds at 50 or 100 yards will be apt to do something. A smart steamer has been dispatched to the mouth of the Potomac to observe it.

JOHN A. DAHLGREN,
Commandant.

Hon. GIDEON WELLES,
Secretary Navy.

[Telegram.]

NAVY YARD [WASHINGTON, D. C.], *March 10, 1862.*

The following communication has been received from Lieutenant Commanding McCrea, of the lower flotilla:

POINT LOOKOUT, *March 10—9:20 a. m.*

From appearances the *Merrimack* is off the point.

I send Master [A. B.] Pierson with this communication to the Department.

F. A. PARKER,
Lieutenant.

Hon. G. WELLES.

[Telegram.]

NAVY YARD [WASHINGTON, D. C.], *March 10, 1862.*

Nothing was done after receiving your note of 10 o'clock last night. The placing of guns in position was also suspended on learning that the *Merrimack* had retired before the *Monitor*, and that the telegraph from Fort Monroe was in action.

J. A. DAHLGREN.

Hon. GIDEON WELLES,
Secretary Navy.

Report of Lieutenant Wyman, U. S. Navy, commanding Potomac Flotilla, of the occupation of Confederate batteries by force from United States vessels.

POTOMAC FLOTILLA, *March 11, 1862.*

SIR: Having received information on the 9th instant that the enemy were abandoning the line of the Potomac, after making a reconnoissance, I directed the steamer *Anacostia*, Lieutenant Commanding Badger, to shell the Cockpit battery, and found it deserted. Small parties were then landed from the *Yankee* and *Anacostia*, our flag was hoisted over the works, and the guns (which were not spiked) spiked. On the 10th instant, with the assistance of a regiment from General Hooker's division, the guns at Cockpit were thrown over the embankment and the gun back of Evansport disabled and some of the ammunition removed.

Immediately on the enemy's discovering that we were aware of their evacuation, they fired everything at the Evansport batteries. Many of their magazines were blown up. The landing parties saved some by removing the slow matches and trains of powder. The gun carriages were fired and rendered useless. The guns were loaded for bursting and exploded as they became heated, dismounting many; but those which have burst appear to me to have burst some time since. Very large quantities of shot and shell have been found in the magazines. The enemy appears to have been entirely deficient in means of transportation. Many tents, camp fixtures, and clothes were left.

These batteries are of a much more formidable nature than I had supposed, and great labor has been expended in their construction. The country around is lined with rifle pits and breastworks thrown up (but no guns mounted) on a hill back commanding the rear of the Shipping Point batteries. The guns are of the best description, mostly United States guns; one an English rifle gun. From the direction on the boxes of ammunition I find that the Evansport batteries were commanded by Frederick Chatard, formerly a commander in the U. S. Navy. The steamer *Page* was blown up and entirely destroyed.

I am, sir, very respectfully, your obedient servant,

R. H. WYMAN,
Lieutenant, Commanding Potomac Flotilla.

Hon. GIDEON WELLES,
Secretary of the Navy.

Report of Lieutenant Wyman, U. S. Navy, commanding Potomac Flotilla, regarding rumored operations of the enemy.

POTOMAC FLOTILLA, *March 13, 1862.*

SIR: I have obtained information through contrabands that the enemy are fortifying Fredericksburg and are building gunboats on the Rappahannock under the superintendence of Mr. Matthew F. Maury.

I am, sir, very respectfully, your obedient servant,

R. H. WYMAN,
Lieutenant, Commanding Potomac Flotilla.

Hon. GIDEON WELLES,
Secretary of the Navy.

Report of Lieutenant Wyman, U. S. Navy, commanding Potomac Flotilla, regarding proposed operations of the enemy.

POTOMAC FLOTILLA, *March 14, 1862.*

SIR: I have received information through our spies, landed the night before last, that there are about forty regiments of the enemy at Fredericksburg; that they are still in force at Aquia, but making all preparations to leave. The enemy expect to make a determined stand at Fredericksburg. They are working fast on their gunboats. The *St. Nicholas* and *Virginia* are moving from Lowry's Point to Fredericksburg; there is a battery at the former place. Mr. Henry [H.] Lewis has charge of the battery and boats.

I am, sir, very respectfully, your obedient servant,

R. H. WYMAN,
Lieutenant, Commanding Potomac Flotilla.

Hon. GIDEON WELLES,
Secretary of the Navy.

[Telegram.]

NAVY YARD [WASHINGTON, D. C.], *March 15, 1862.*
(Received 10:20 a. m.)

I have no certain information of the *St. Lawrence*, but believe from what I have heard that she and the *Brandywine* were to be off the Potomac.

J. A. DAHLGREN.

Hon. GIDEON WELLES,
Secretary Navy.

Order of the Secretary of the Navy to Joseph Bryan, regarding steamer George Page.

NAVY DEPARTMENT, *March 17, 1862.*

[SIR:] In compliance with your request of this date you are hereby authorized to proceed to Quantico Creek, with such force as may be necessary, and bring away what may be left of the machinery of the steamer *George Page.*

Very respectfully,

GIDEON WELLES.

JOSEPH BRYAN,
Washington.

[Telegram—Received March 18, 1862.]

POTOMAC FLOTILLA—5 p. m.

SIR: From two deserters from Aquia Creek I learn that there are there about 1,800 men, Second North Carolina, Third North Carolina, and Third Arkansas; at Brooke's Station, 800, all infantry; near the town of Aquia, 700 cavalry; at Stafford Court-House, three regiments con-

taining 2,000 infantry, and also seven pieces of artillery, 24-pounder rifles. About 3 miles above Aquia are ten pieces [of] artillery, called Walker's Battery. At Fredericksburg are known to be 20,000 troops; more are coming in fast. The encampment at Potomac Creek has gone [to] Fredericksburg. The railroad at Aquia Creek destroyed for about 2 miles; more is destroyed each day; the buildings and railroad track at Aquia Creek are now burning. The first division of the *corps d'armée* has passed safely below Boyd's Hole, under convoy of three of this flotilla, to its destination.

Very respectfully, yours,

R. H. WYMAN,
Lieutenant, Commanding Potomac Flotilla.

Hon. SECRETARY OF NAVY.

Report of Lieutenant Wyman, U. S. Navy, commanding Potomac Flotilla, regarding vessels employed in convoy duty.

POTOMAC FLOTILLA, *March 19, 1862.*

SIR: In compliance with your verbal order I have sent three of the steamers of this flotilla to convoy the army transports to Hampton Roads and report for further orders to Flag-Officer L. M. Goldsborough.

The vessels sent are the *Anacostia*, *Freeborn*, and *Island Belle*. The boilers of two of the most efficient steamers here now are so much worn that they may give out at any moment. New boilers for these vessels are making.

I am, sir, very respectfully, your obedient servant,

R. H. WYMAN,
Lieutenant, Commanding Potomac Flotilla.

Hon. GIDEON WELLES,
Secretary of the Navy.

Report of Lieutenant Wyman, U. S. Navy, commanding Potomac Flotilla, regarding blocking the channel of the river.

POTOMAC FLOTILLA, *March 19, 1862.*

SIR: Doubts have arisen in my mind regarding the practicability of blocking the channel at the Kettle Bottoms. I have had it sounded, as also the channel in the narrowest point at Nanjemoy, both of which are wider and have much more water than the chart gives (which throughout is incorrect). I now think that Smith's Point and Mattawoman Muds are the best points for blocking, and that the frigates had better come up to Smith's Point and the barges which are at present at Kettle Bottoms removed to that point.

Very respectfully,

R. H. WYMAN,
Lieutenant, Commanding Potomac Flotilla.

[Hon. GIDEON WELLES,
Secretary of the Navy.]

[Telegram.]

SEMINARY, *March 20, 1862.*
(Received at Washington 12 m.)

I request that instructions may be given to Commodore Goldsborough to send back at once to the Potomac Wyman's vessels that conveyed Heintzelman. They will be needed to convoy another large detachment.

G. B. MCCLELLAN,
Major-General.

Hon. GIDEON WELLES,
Secretary Navy.

Report of Lieutenant Wyman, U. S. Navy, commanding Potomac Flotilla. regarding U. S. frigate Brandywine.

POTOMAC FLOTILLA, *March 21, 1862.*

SIR: On the last information which I received from below, the *Brandywine* had not arrived.

I shall inform the Department immediately on her arrival.

I am, sir, very respectfully, your obedient servant,

R. H. WYMAN,
Lieutenant, Commanding Potomac Flotilla.

Hon. G. V. FOX,
Assistant Secretary of the Navy.

[Telegram.]

POTOMAC FLOTILLA, *via Budd's Ferry, March 22* [*1862.*]

SIR: The *Anacostia* has arrived, but with her machinery in such a condition as will require seven hours for repairs. The *Freeborn* and [*Island*] *Belle* not in yet. The *Brandywine* not yet arrived. The troops of the enemy at Kinsale, Yeocomico [River], are said to have gone to Fredericksburg. There were there about 400.

Respectfully, yours,

R. H. WYMAN,
Lieutenant, Commanding Flotilla.

Hon. G. V. FOX.

Report of Lieutenant Wyman, U. S. Navy, commanding Potomac Flotilla, regarding convoy duty.

POTOMAC FLOTILLA, *March 23, 1862.*

SIR: In consequence of the necessity of repairs on the engines of the steamers *Anacostia* and *Freeborn*, after their return from Hampton Roads, I dispatched the *Satellite*, *Cœur de Lion*, and *Island Belle* to act as convoy to the second division of transports, with orders to return immediately on the performance of their service. The *Anacostia* is now in good order. The *Freeborn* ran aground at Hampton Roads, which

has strained her much and twisted her steam pipes. I fear that it may be found necessary to send her to the navy yard for repairs.

I am, sir, very respectfully, your obedient servant,

R. H. WYMAN,
Lieutenant, Commanding Flotilla.

Hon. GIDEON WELLES,
Secretary of the Navy.

Report of Lieutenant Wyman, U. S. Navy, commanding Potomac Flotilla, regarding condition of U. S. S. Yankee.

POTOMAC FLOTILLA, *March 24, 1862.*

SIR: The main guide of the engine of the steamer *Yankee* having broken she is rendered entirely useless. It will require at least six days to repair her, and place the shaft in line. Having no accommodations for myself in any other vessel, I shall be obliged to retain her here until all the divisions of the Army (that are moving by the river) have gone, or until I can procure a vessel from the navy yard.

I would respectfully request information from the Department as to whether the vessels going as convoy to the divisions of transports are to remain at Hampton Roads after convoying the last division.

I am, sir, very respectfully, your obedient servant,

R. H. WYMAN,
Lieutenant, Commanding Potomac Flotilla.

Hon. GIDEON WELLES,
Secretary of the Navy.

Order of the Secretary of the Navy to Lieutenant Wyman, U. S. Navy, commanding Potomac Flotilla, regarding the obstructing of the river.

NAVY DEPARTMENT, *March 25, 1862.*

SIR: Yours of the 24th instant is received. The *Brandywine* will not come into the river. Nets and hawsers stretched across the narrowest part of the channel will foul the *Merrimack's* propeller, and you are authorized to prepare such for obstructing her progress. The vessels of the flotilla sent by you to Hampton Roads are ordered to return at once, though by and by the heaviest armed may be required to cooperate at that point. Due notice will be given to you.

I am, respectfully, etc.,

GIDEON WELLES.

R. H. WYMAN,
Lieutenant, Commanding Potomac Flotilla.

Report of Lieutenant Wyman, U. S. Navy, commanding Potomac Flotilla, of information received regarding movements of the enemy.

POTOMAC FLOTILLA, *March 24, 1862.*

SIR: I send to the navy yard two men who came off from Virginia this evening claiming protection. They are named William Talbot and William Maddox, and were employed to take care of the farm of Mrs.

Otterback (of Washington) at Quantico Creek, until the farm was destroyed by the rebels. The man Talbot seems very intelligent. He states that it was not known until Friday by the rebels that they were to fall back. They commenced falling back on Saturday, arriving in Dumfries that night. We discovered it on Sunday. He was in Fredericksburg the Tuesday before, and it was only known there on that day that the whole line of the enemy was to fall back from Manassas and the Potomac. It was told him by a black man, who was in Fredericksburg a week ago, that the enemy had fallen back to 7 miles beyond Fredericksburg. He speaks of great dissatisfaction existing among their troops, and of their pressing every one into service.

I am, sir, very respectfully, your obedient servant,

R. H. WYMAN,
Lieutenant, Commanding Potomac Flotilla.

Hon. G. V. FOX,
Assistant Secretary of the Navy.

Report of Lieutenant Wyman, U. S. Navy, commanding Potomac Flotilla, forwarding statements of captured men.

POTOMAC FLOTILLA, *March 25, 1862.*

SIR: I forward to the navy yard two men, natives of Baltimore, who have very recently made their escape from Fredericksburg. One has not been in military service; the other is a deserter from the First Maryland Regiment. I enclose herewith their statements as questioned by myself.

I am, sir, very respectfully, your obedient servant,

R. H. WYMAN,
Lieutenant, Commanding Potomac Flotilla.

Hon. G. V. FOX,
Assistant Secretary of the Navy.

[Enclosure.]

Statement of Charles H. Johnson (butcher).

Was born in Baltimore; have been living in Virginia two years; left Fredericksburg on Monday, the 24th instant, at 9 o'clock. The troops there are encamped 1½ miles beyond Fredericksburg; there are nineteen or twenty thousand; do not know that there are any besides those who were withdrawn from the Potomac. I believe that they intend to make a stand between Fredericksburg and Richmond. Fredericksburg is not fortified. I saw three guns which were taken from Aquia Creek lying on the cars as I came through the depot at Fredericksburg. Have seen the steamers *St. Nicholas* and *Virginia*; they have no guns; they are enlisting men at Richmond for the Navy. Men were detailed about six weeks since to work on gunboats on the Rappahannock. The cargo of a schooner from Baltimore, consisting of cloth and powder, was taken overland to Fredericksburg last Saturday; this schooner probably entered some of the inlets between the Potomac and Rappahannock rivers.

Statement of John S. League.

Was born in Baltimore; have been in Virginia ten months; have been in the army—First Maryland Regiment; was stationed at Manassas; this regiment contains about 750 men, and is now at Gordonsville. Left

Manassas the day after it was evacuated; preparations were making to evacuate Manassas about a week before it was abandoned; the troops at Manassas were in a tolerably good condition. I arrived from Fredericksburg after the troops came in from the river; believe that the whole line was abandoned at the same time; the troops are 1½ miles beyond Fredericksburg, about 20,000. Fredericksburg is not fortified; there are no guns on steamers *Virginia* and *St. Nicholas*; the bridges across to Fredericksburg are standing. Came along the railroad track to Aquia Creek; saw no troops, but a few pickets at Aquia Creek who fired at us. The railroad track was not torn up.

Report of Lieutenant Wyman, U. S. Navy, commanding Potomac Flotilla, regarding existence of Union sentiment in Virginia.

POTOMAC FLOTILLA, *March 29, 1862.*

SIR: There is a strong Union feeling in the country about the Lower Machodoc, Va. The white flag is flying from every house and the people say that they are willing to take the oath of allegiance, if the Government will protect them afterwards. Three thousand men left that vicinity about ten days since for Fredericksburg. These are the men who have been stationed along the river from Machodoc to the southward.

I am, sir, very respectfully, your obedient servant,

R. H. WYMAN,
Lieutenant, Commanding Potomac Flotilla.

Hon. G. V. FOX,
Assistant Secretary of the Navy.

[Telegram.]

BUDD'S FERRY, *March 31, 1862.*
(Received 12 m.)

SIR: The frigate *St. Lawrence* was at St. George's Island at 5 p. m. yesterday.

Very respectfully,

R. H. WYMAN,
Lieutenant, Commanding Potomac Flotilla.

Hon. G. V. FOX,
Assistant Secretary Navy.

[Telegram.]

POTOMAC FLOTILLA, *March 31, 1862.*

SIR: I have information from Fredericksburg to Saturday last. The camp is about 3 miles beyond Fredericksburg; about thirty regiments; five have gone toward Richmond; no guns at Fredericksburg; those taken from Aquia Creek have been moved on to Richmond. General Holmes has left; many people are moving out [of] Fredericksburg. Railroad is complete to Brooke's Station; from there to Aquia Creek it

is torn up. Two companies of cavalry are at Stafford Court-House; scouts are on the road.

One artillery company detained in Fredericksburg.

Respectfully,

R. H. WYMAN,
Commanding Flotilla.

Hon. G. V. FOX,
Assistant Secretary.

Report of Captain Purviance, U. S. Navy, commanding U. S. frigate St. Lawrence, of arrival of that vessel in Potomac River.

U. S. FRIGATE ST. LAWRENCE,
Off Ragged Point, April 1, 1862.

SIR: I have the honor to report the arrival of this ship in Potomac River, having been windbound for three days.

Very respectfully, your obedient servant,

H. Y. PURVIANCE,
Captain.

Hon. GIDEON WELLES,
Secretary Navy.

Report of Captain Purviance, U. S. Navy, commanding U. S. frigate St. Lawrence, of arrival of that vessel at Kettle Bottom Shoals, Potomac River.

U. S. FRIGATE ST. LAWRENCE,
Kettle Bottom Shoals, April 2, 1862.

SIR: I have the honor to report the arrival of this ship at this place, and await further orders.

Very respectfully, your obedient servant,

H. Y. PURVIANCE,
Captain.

Hon. GIDEON WELLES,
Secretary of Navy.

Report of Lieutenant Wyman, U. S. Navy, commanding Potomac Flotilla, forwarding information received from refugees.

POTOMAC FLOTILLA, *April 2, 1862.*

SIR: I have forwarded to the navy yard, Washington, four refugees from Virginia—Mr. Jacob Gardy, Mr. George Sadler, Mr. Albert R. Swisher, Mr. Richard C. Fedderman.

These men represent that those of their vicinity who are implicated in the rebellion are moving south; some to the other side of the Rappahannock River, others to the more southern States; that there is much suffering among the poorer classes and a general discontent. From hearsay, that there are two forts on the Rappahannock, one at Lowry's Point mounting eight guns, another about 5 miles below Fredericksburg at the ship yard, where they have been for the last seven

weeks making preparations to build gunboats, but they think with little success. The militia of Richmond County was ordered to report at Fredericksburg; they heard that the bridges over the Rappahannock were mined, ready to be blown up, if necessary. Mr. Fedderman has a letter signed by Mr. Benjamin refusing him permission to pass our lines.

I am, sir, very respectfully, your obedient servant,

R. H. WYMAN,
Lieutenant, Commanding Potomac Flotilla.

Hon. GIDEON WELLES,
Secretary of the Navy.

[Telegram.]

POTOMAC FLOTILLA, *April 3, 1862.*

I have information saying that Fort Lowry, at Lowry's Point on the Rappahannock, has been abandoned and there are now no fortifications until just below the city of Fredericksburg.

Respectfully,

R. H. WYMAN,
Commanding Flotilla.

G. V. FOX,
Assistant Secretary Navy.

Report of Lieutenant Wyman, U. S. Navy, commanding Potomac Flotilla, regarding refugees.

POTOMAC FLOTILLA, *April 6, 1862.*

SIR: I forward to the navy yard, Washington, three refugees from Virginia—Carolus W. Rollins, a resident of King George County; James W. Keys, a resident of Prince William County, and a deserter from the rebel Army at Fredericksburg, March 17, and James Treakle, a resident of Alexandria, a pilot on the Potomac River, who left Alexandria at the commencement of the rebellion to join his sons in King George County.

I am, sir, very respectfully, your obedient servant,

R. H. WYMAN,
Lieutenant, Commanding Potomac Flotilla.

Hon. GIDEON WELLES,
Secretary of the Navy.

Report of Lieutenant McCrea, U. S. Navy, commanding U. S. S. Jacob Bell, of expedition up the Rappahannock River.

U. S. S. JACOB BELL,
Rappahannock River, April 15, 1862.

SIR: Immediately upon the receipt of your telegram,* by order of the President I proceeded at once to carry out the instructions therein contained.

* Not found.

I could get no pilot or I should have gone up farther. At this point the channel is 2 fathoms deep, crooked, and varies, and I could not devote the time to survey and pass up. I heard from a negro that 5 schooners were sunk in the channel 7 miles this side of Fredericksburg.

There are no obstructions of any kind in the channel so far. Off Fort Lowry the light-ship is sunk, though her masts are visible still, a perfect mark in daytime. Tappahannock is 50 miles from Richmond and the same from Fredericksburg by land, the latter 75 miles by water. Troops can be landed here with perfect ease, but pilots must be had.

I laid off Tappahannock all night, hoping I might secure something passing down; at daylight I was rewarded by capturing a sloop from Fredericksburg with shad, oysters, and letters containing valuable information. I enclose them for your perusal.*

I immediately got underway and stood down the river. I had decided not to go to Fredericksburg from the nature of the river. My vessels could have been sunk by rocks and stones from the banks, which are at least 200 feet high, and I was advised not to go by a man at Tappahannock, who said he gave me the intelligence out of gratitude for sparing the town, as they thought I would destroy it, as I had the barracks, etc., at Fort Lowry.

The men from the captured sloop gave way in their little boat as soon as they saw us and landed on the starboard side of the river. They had too good a start for us to catch them.

I captured coming down the river two schooners from out a creek (Totouskey Creek).

At Union Wharf I saw a lot of men. I made a hurried landing and captured two Confederates belonging to Captain Jeffers's company and Hardin's; they were to go into camp to-morrow; they have been impressed and would stand by the Union if they dared, so they say; being in uniform, I retained them as prisoners. At the store on the said wharf I took all contraband articles, salt, coffee, etc., scuttled the whisky and rum. The feeling is Union if they could be protected. At Heathsville there are 90 cavalry without arms or accouterments and are to go into camp to-morrow at 3 p. m.; two-thirds of them are impressed Unionists and wish to be captured.

Very respectfully, your obedient servant,

E. P. McCREA,
Lieutenant, Commanding Expedition.

Hon. GIDEON WELLES,
Secretary of the Navy, Washington, D. C.

Order of the Secretary of the Navy to Acting Master Studley, U. S. Navy, commanding U. S. S. Young Rover.

NAVY DEPARTMENT, *April 17, 1862.*

SIR: You will report with your vessel to Lieutenant Commanding R. H. Wyman for duty in the Potomac Flotilla under his command.

I am, respectfully, your obedient servant,

GIDEON WELLES.

Acting Master IRA B. STUDLEY,
Commanding Young Rover, off York River, Va.

---

*Irrelevant matter.

[Enclosure.]

Fort Lowry—Pierced for five guns.
A. Light-boat, sunk.
B. Schooner, with guns taken from fort (sunk).
C. Picket station and headquarters.
D. New barracks, just finished.
E. Old barracks, destroyed by expedition.

Schooner *Monterey*, Tappahannock.—Sails, etc., complete; no cargo.

Schooner *Lookout*, of Baltimore.—Sails, rigging, etc., complete; cargo, corn for Confederate Government.

Schooner *Sarah Ann*, of New Berne.—Sails, etc., complete; cargo, corn; abandoned.

Schooner *Sydney Jones*, of Baltimore.—Sails, furniture, etc., complete; no cargo; abandoned.

Sloop *Reindeer*, of Tappahannock.—Sails, etc., complete; no cargo; abandoned.

Schooner *Falcon*, Tappahannock.—Sails, etc., complete; no cargo; abandoned.

Schooner *Sea Flower*.—Abandoned; secreted in a creek and masts cut away to prevent detection; cargo, 4 barrels bone dust, 60 pounds shoe thread, 5,400 pounds copperas, 40 pounds shoe thread (colored), 600 pounds saltpeter, 176 gallons castor oil, 20 pounds indigo, 8 gross essence coffee, 672 pounds carbonate soda, 4 dozen cans solidified lye, 500 pounds alum, 2 small compasses, 2 large cases of assorted dry goods, clothes, hosiery, and notions.

Steamer *Roundout*, side wheel.—No cargo.

No papers were found in any of the above-mentioned vessels.

I am, sir, very respectfully, your obedient servant,

R. H. WYMAN,
Lieutenant, Commanding Flotilla.

Hon. GIDEON WELLES,
Secretary of the Navy.

Further report of Lieutenant Wyman, U. S. Navy, commanding Potomac Flotilla, regarding expedition up the Rappahannock River to Fredericksburg.

FLOTILLA, POTOMAC AND RAPPAHANNOCK, *April 22, 1862.*

SIR: Your telegram of the 21st has just been received. I yesterday forwarded my report to the Navy Department. The day before yesterday I was at Fredericksburg. The river is perfectly clear of obstructions excepting about 7 miles below the city, where some schooners loaded with stone are sunk. There is a channel left, however, through which vessels can pass. There are but few of the enemy's pickets on the river; a few shots were fired at us by them; the people seemed disposed to remain quiet.

I am, sir, very respectfully, your obedient servant,

R. H. WYMAN,
Lieutenant, Commanding Flotilla.

Hon. G. V. FOX,
Assistant Secretary of the Navy.

Report of Lieutenant Wyman, U. S. Navy, commanding Potomac Flotilla, regarding means for preventing Confederate communication.

FLOTILLA, POTOMAC AND RAPPAHANNOCK, *April 23, 1862.*

SIR: I have ascertained that a constant communication has been carried on with the rebels (both in freight, passengers, and mails) for some months, by vessels from Baltimore running into the Great Wicomico, which lies between the Potomac and the Rappahannock rivers.

The cargoes were landed there and reshipped at Deep Creek, on the Rappahannock. There is another river, the Piankatank, below the Rappahannock, which I have no doubt has been used for the same purpose; but the force at my command has been so occupied that I have not as yet been able to search the river. To guard all these points properly I would require two or three more light steamers. Those which I have are constantly breaking down and requiring repairs at times when I can least spare them.

The auxiliary propeller *Young Rover* is a vessel well adapted to blockading on the coast, and a lighter draft steamer would be more serviceable in the rivers.

The stone barges on the Potomac require the constant attention of two of the vessels of this flotilla to keep them from sinking at their anchors.

I am, sir, very respectfully, your obedient servant,

R. H. WYMAN,
Lieutenant, Commanding Flotilla.

Hon. GIDEON WELLES,
Secretary of the Navy.

Order of the Secretary of the Navy to Lieutenant Wyman, U. S. Navy, commanding Potomac Flotilla, regarding U. S. S. Young Rover.

NAVY DEPARTMENT, *April 25, 1862.*

SIR: You will give directions to the U. S. bark *Young Rover*, recently transferred to your command, to proceed to Key West and report to Flag-Officer Wm. W. McKean, or the senior commanding officer present, for duty in the Eastern Gulf Blockading squadron. Should it be necessary to have any repairs put on her before leaving for the Gulf, you will send her to Washington for that purpose.

I am, respectfully, your obedient servant,

GIDEON WELLES.

Lieutenant R. H. WYMAN,
Commanding Potomac Flotilla, Potomac River.

Report of Lieutenant Wyman, U. S. Navy, commanding Potomac Flotilla, regarding U. S. S. Young Rover.

FLOTILLA, POTOMAC AND RAPPAHANNOCK, *April 28, 1862.*

SIR: I have the honor to inform the Department that in obedience to your order of the 25th instant (received to-day), I have directed the U. S. S. *Young Rover*, to report at Key West to Flag-Officer W. W. McKean, or senior officer present.

She requires no repairs and will sail immediately on being filled with water.

I am, sir, very respectfully, your obedient servant,

R. H. WYMAN,
Lieutenant, Commanding Flotilla.

Hon. GIDEON WELLES,
Secretary of the Navy.

Report of Lieutenant Wyman, U. S. Navy, commanding Potomac Flotilla, of the capture of smugglers.

FLOTILLA, POTOMAC AND RAPPAHANNOCK, *April 28, 1862.*

SIR: I forward to the charge of the commandant of the navy yard, Washington, five prisoners, taken in the act of smuggling goods from Accomac to the western shore of Virginia. Their names are as follows: W. B. Chum, Accomac County; John R. Bowles, Amherst County, Va.; Isaac Smith, Accomac County; Revel Evans, Accomac County; John W. Burton, Accomac County. The amount of goods is but small and will be sent to the district marshal.

I am making a thorough examination of the Piankatank River. Yesterday our boat's crew was fired upon quite sharply from the shore in the vicinity, but no one was injured.

The communications of the rebels being now cut off by way of the Peninsula, I judge it will be attempted by way of the Piankatank and Mobjack Bay. The former I shall blockade effectively.

I am, sir, very respectfully, your obedient servant,

R. H. WYMAN,
Lieutenant, Commanding Flotilla.

Hon. GIDEON WELLES,
Secretary of the Navy.

Report of Lieutenant Wyman, U. S. Navy, commanding Potomac Flotilla, transmitting letters regarding escaped negroes.

FLOTILLA, POTOMAC AND RAPPAHANNOCK, *May 2, 1862.*

SIR: I enclose herewith several letters from persons in Lancaster County, Va., regarding negroes who have escaped and been taken on board the U. S. S. *Young Rover*.

I am. sir, very respectfully, your obedient servant,

R. H. WYMAN,
Lieutenant, Commanding Flotilla.

Hon. GIDEON WELLES,
Secretary of the Navy.

[Enclosures.]

LANCASTER COUNTY, VA., *April 28, 1862.*

DEAR SIR: I take the privilege of addressing to you this letter, the object of which is to recover my property that has been taken from me without any provocation on my part. Sir, on the 7th of April, 1862, seven of my slaves left me and went on board the ship *Young Rover*, then lying in the mouth of Rappahannock River, and have since been sent to Fortress Monroe. Sir, I am a private and peaceable citizen. I have never borne arms against the United States, nor have I any child or near friend who has. In the commencement of these troubles I voted for the Union candidate and labored hard for that cause, and made many enemies by it. The 2d day of April we had a meeting and passed a resolution (unanimous) that we would offer no military defense to the Northern Army. With these considerations, I appeal to you to have my property returned. I am a farmer, and have been in the business of wood cutting for five years, and have a large contract with Oliver H. Booth, of New York, at this time. I have 1,200 cords of wood on hand all ready for market, but must lose it if my servants are not returned. I have seen the captain of the *Rover*, Captain John

B. Studnall [Ira B. Studley]. He is a gentleman of fine feelings, and I think if this property is returned he is calculated to make many friends to the Union. He is perfectly in possession of my views. The servants I lost, the names are as follows:

Charlotte, woman, 23 years old.
Isaac, young man, 21 years old.
Dennis, 18 years old.
Emma, 16 years old.
Laurinda, 15 years old.
Margaret, 13 years old.
Charles, a blind boy, of 23 years.

A woman I hired from A olfin [an orphan] child and two small children—Isabella, Minnie, Moses—and a man I hired from Mrs. Cundip named Mack Kelly.

Sir, your compliments [compliance] will greatly oblige,

Your obedient servant,

B. B. McKENNEY.

Commodore WYMAN.

P. S.—I think my negroes should be returned, because they were taken after the order was issued to take no more, and at the time there was not a man in Lancaster in arms against the Federal Army. I hope, sir, if you can, you will return my negroes; if you can't, please forward this to the proper authorities.

B. B. McKENNEY.

APRIL 30, 1862.

SIR: On the morning of the 7th of April, 1862, five of my negroes deserted me and went on board of the steamer *Young Rover*, then lying at the mouth of the Rappahannock River. The said steamer was commanded by Captain Studnall [Studley]. The names and ages of the negroes are as follows:

Lucinda, aged 45; Thomas, aged 25; Jesse, 24; Davy, 20; Edward, 17.

I understood from several officers who were stationed aboard the blockading steamer that they, two days after the reception of the above-mentioned negroes, received orders from Washington not to take any more slaves aboard. This order had probably been issued three or four days previous to its reception and had become a law at the very moment it was issued, subsequent to which time my negroes absconded. The said negroes have never been engaged in any work of public defense since the war began. If the said negroes are to be delivered up you will greatly oblige me by information of the time when and place where.

Your compliance with the above will greatly oblige,

Yours, very respectfully,

GEORGE G. LEE,
White Stone, Lancaster County, Va.

Commodore WYMAN,
Of the Steamer Yankee,
Lying at the Mouth of the Rappahannock River.

LANCASTER COUNTY, VA., *May 1, 1862.*

DEAR SIR: The object of my letter is informing you that on the 7th of April, 1862, my servant man, named George, 20 years old, left and went off in company with Mr. McKenney's negroes on board of the blockading steamer *Young Rover*, then lying in the Rappahannock River. Sir, *I am an old man* of 59 years. This servant has never

been engaged in any work or any public works for any army service. Any assistance you can give me in returning my property will be gratefully received.

Please forward to proper authorities.

Respectfully,

WILLIAM DOGGETT.

Commander WYMAN.

LANCASTER COUNTY, STATE OF VIRGINIA, *May 1, 1862.*

DEAR SIR: The object of this communication is to respectfully ask your aid in recovering a servant woman, Mary, who left me on the night of the 6th of April and went on board of the steamer *Young Rover* on the morning of the 7th of April, which vessel was, at the time specified, lying in the mouth of the Rappahannock River. The said woman is tall and quite dark color, and is about 35 years of age. I learn the said vessel was at the time commanded by Captain Studnall [Studley]. I am a widow in small circumstances, and as the said Mary was the only woman I had, her loss to me is very great. I ask that you will be kind enough to forward this to the proper Department of the United States, and all aid you afford in this matter will be thankfully received and duly appreciated.

Respectfully,

LOUISA DUNTON.

Commander WYMAN.

GLEBE FARM, LANCASTER COUNTY, VA., *May 1, 1862.*

SIR: On the 7th of April, 1862, three of my negro men, viz, Dick, William, and Daniel, left my farm, and I have every reason to believe that they went on board of blockading steamer *Young Rover*, Captain I. B. Studnall [Studley], then lying at the mouth of the Rappahannock River. These servants have never been engaged in working on any public works or fortifications of any kind. I am a farmer and peaceable citizen, and have never borne arms against any government, and am now 52 years of age. I think it but just and right that these servants should be returned, and have every reason to believe that the Government at Washington has no intention of depriving me of my property.

I am very sorry you could not call upon me according to promise. Was my health not so feeble I would do myself the honor of visiting you on board of your steamer. As this can not be, I hope you will be so kind as to use your influence for the restoration of my property.

I remain, dear sir, your obedient servant,

JAMES W. GRESHAM.

Commodore WYMAN.

MAY 1, 1862.

SIR: On the morning of the 7th of April, 1862, four of my servants deserted me and went on board of the steamer *Young Rover*, then lying at the mouth of the Rappahannock River. The said steamer was commanded by Captain Studnall [Studley]. The names and ages of the servants are as follows:

Louisa, very light color, age 18 years.
Winney, tawny color, age 18 years.
Maria, dark color, age 16 years.
Winney's child, infant, 4 months.

I understood from several officers who were stationed aboard the blockading steamer, that they, two days after the reception of the above-mentioned servants, received orders from Washington not to take any more slaves aboard. This order had probably been issued three or four days previous to its reception, and had become a law at the very moment it was issued, subsequent to which time my servants absconded. The said servants had never been engaged in any work of public defense since the war began. If the said servants are to be delivered up you will greatly oblige me by information of the time when and place where.

Your compliance with the above will greatly oblige,

Yours, very respectfully,

GRIFFIN WILLIAMS,
Lancaster County, Va.

Commodore WYMAN,
Of the Steamer Yankee,
Lying at the Mouth of the Rappahannock River.

WHITE STONE, LANCASTER COUNTY, STATE OF VIRGINIA,
May 1, 1862.

DEAR SIR: The object of this communication is to respectfully ask your aid in recovering five servants who left me on the night of the 6th of April, 1862, and went on board of the steamer *Young Rover* on the morning of the 7th April, 1862, which vessel was, at the time specified, lying at the mouth of the Rappahannock River. The names and ages of the said servants are as follows:

Robert Layton, dark tawny color, 38 years old.
Henry Robinson, dark tawny color, 35 years old.
Lettie, the wife of Henry Robinson, light tawny color, 26 years old.
William Candy Lettie, child, between 3 and 4 years.
Mary Jane Lettie, child, between 2 and 3 years.

I learn that the said steamer was at the time commanded by Captain Studnall [Studley].

Sir, I can assure you that none of the above servants have ever been engaged in any work of public defense since the war began. Sir, I ask that you will be kind enough to forward this communication to the proper Department of the United States, and all aid you can afford in this matter will be thankfully received and duly appreciated.

Yours, very respectfully,

A. M. SANDERS.

Commander WYMAN.

RAPPAHANNOCK RIVER,
Near Carter's Creek, May 2, 1862.

SIR: On the 7th of April, two of my servants, a woman and boy, ran away, and were taken on board the U. S. S. *Young Rover*, then lying off the mouth of the Rappahannock.

These servants, Roxy and Isaac, were taken to Fortress Monroe and there landed.

It is my earnest request that they should be returned to me, as they have not been employed for any military purpose against the Government of the United States.

Very respectfully, etc.,

MARIETTA E. LELAN.

Hon. GIDEON WELLES,
Secretary Navy.

Request of Lieutenant Wyman, U. S. Navy, commanding Potomac Flotilla for the U. S. S. Stepping Stones.

FLOTILLA, POTOMAC AND RAPPAHANNOCK, *May 6, 1862.*

SIR: I respectfully request that the steamer *Stepping Stones* may be returned to my command if her services are no longer necessary on the Poquosin River.

I am, sir, very respectfully, your obedient servant,

R. H. WYMAN,
Lieutenant, Commanding Flotilla.

Hon. G. V. FOX,
Assistant Secretary of the Navy.

Report of Lieutenant Wyman, U. S. Navy, commanding Potomac Flotilla, transmitting reports regarding reconnoissance of Mobjack Bay and Piankatank River.

FLOTILLA, POTOMAC AND RAPPAHANNOCK, *May 8, 1862.*

SIR: I have the honor to enclose herewith the reports of Lieutenant Commanding Badger, steamer *Anacostia*, and of Lieutenant Commanding Magaw, steamer *Freeborn*, of their examination of Mobjack Bay and the Piankatank River. I have since learned that the light-boat taken from Windmill Point [Rappahannock] Spit is anchored inside Gwynn's Island, and have some clew to where the lighting apparatus is. These I shall make every effort to obtain. I have found it necessary to take and destroy all vessels and boats of any size on the Rappahannock, as they were being used to cross men from the Peninsula, and I am convinced that there is hardly a man with Union sentiments on the southern bank of the river. It is now rumored among the negroes that the enemy intend placing batteries on the Rappahannock, and the points selected have been pointed out by them, but as yet no step has been taken toward it. Should they do so I think it will be merely for the purpose of protecting a crossing nearly opposite the Brisco [Bristoe?] mines, from which point a field battery could be brought to command entirely their position (selected by report). The river is so narrow above Tappahannock as to render it almost impossible for vessels to act against even a field battery. At present there are but a few pickets on the southern bank of the river, and they generally keep well out of range.

I am, sir, very respectfully, your obedient servant,

R. H. WYMAN,
Lieutenant, Commanding Flotilla.

Hon. GIDEON WELLES,
Secretary of the Navy.

[Enclosures.]

U. S. S. ANACOSTIA,
Flotilla, Potomac and Rappahannock, May 2, 1862.

SIR: I have the honor to report that in obedience to your order I have examined Mobjack Bay and the creeks and rivers connected therewith, as far as practicable without a pilot.

I took the *Anacostia* a short distance up the Severn, Ware, and North rivers. In each we saw some schooners on shore without sails, having the appearance of being some time out of use. Some distance up the Severn there is a schooner in good order, moored close under the bank,

no doubt well protected by the pickets of the enemy, as it is but a short distance from Gloucester Point. To penetrate this river, we should be supplied with a pilot, and at least three steamers; no doubt we should have to contend with field artillery.

I am of the opinion that a small steamer should be stationed in Mobjack Bay, as there is nothing to prevent access to it for contraband trade or for other purposes. The steamer in the bay might also occasionally take a cruise up as far as the mouth of the Piankatank at night. I observe that vessels frequently anchor in the Chesapeake Bay near the Virginia shore, and boats we know cross from the eastern to the western shore.

Very respectfully, your obedient servant, etc.,

O. C. BADGER,
Lieutenant, Commanding.

Lieutenant Commanding R. H. WYMAN,
Commanding Flotilla, Potomac and Rappahannock.

U. S. S. FREEBORN,
Piankatank, Va., April 29, 1862.

SIR: I have the honor to report that, in obedience to your order, I have examined the Piankatank River and found (about 20 miles up) three schooners scuttled. On our return with the *Island Belle* and prize steamer *Eureka*, we were attacked by a battery of light artillery from a bluff and thicket; no damage was done us by the enemy of any importance. Our rifles prevented them from loading and discharging rapidly.

Proceeding about two-thirds of a mile below the point of attack we stopped and shelled out the party, firing seven shells into the woods without a response. Upon reaching Fishing Bay I found the *Freeborn*, Master's Mate Brice in charge, had been attacked during my absence, and had shelled the enemy until they ceased firing. The *Island Belle* received two rifle shell and some musket balls; the *Eureka* received three rifles, one through her pilot house, one through her smokestack, and one on her after deck, cutting away the steering gear. I am pleased to say that Acting Master Harris, Master's Mate Newton, and Third Assistant Engineer Magaw behaved with great coolness and gallantry. The pilot of the *Freeborn*, Mr. Harden, and Peter Nash, seaman, were slightly wounded, but both are now on duty. The *Eureka* has been repaired; in fact, her efficiency was not impaired for more than fifteen minutes.

Yours, faithfully,

SAMUEL MAGAW,
Lieutenant, Commanding.

Commodore WYMAN,
Commanding Flotilla.

[Subenclosure.]

U. S. S. FREEBORN,
Piankatank River, April 29, 1862.

SIR: I have the honor to submit the following report of the attack of the enemy upon this vessel during your absence up the Piankatank River on a reconnoissance of 29th instant:

While lying at anchor in the same position you left me in the morning, the enemy opened fire upon us from a masked battery of three or more guns (rifled), situated on an elevated position of 500 or 600 yards distant.

I immediately got underway and returned their fire with such accuracy as to silence their guns.

Respectfully submitted.

J. J. BRICE,
[Acting] Master's Mate.

Lieutenant SAMUEL MAGAW,
Commanding Freeborn.

Report of Lieutenant Wyman, U. S. Navy, commanding Potomac Flotilla, regarding protection for loyal citizens of Virginia.

FLOTILLA, POTOMAC AND RAPPAHANNOCK, *May 15, 1862.*

SIR: The citizens of Mathews County, Va., whom I have met state that two-thirds of the population of that county are loyal. Out of 500 militia from that county drafted to the rebel ranks, all but eighteen have deserted and returned to their homes.

They have claimed through myself the protection of the Government. I have answered them that on giving up their arms, and affording me the assistance which may be in their power in obtaining possession of any Government property which may be in that county, I will give them all the protection in my power against the rebels, and have made arrangements to that effect, in case there should be any attempt made by the rebels to capture those who have deserted.

I have been informed that a letter was received in Mathews County from a person in Magruder's division, dated from Hanover Court-House, stating that the division was on the march to Gordonsville.

I have received applications from Lancaster, Richmond, and Westmoreland counties, Va., requesting permission to ship their grain and receive in return many of the necessities of life, of which they are now entirely destitute. I have directed that their applications be addressed in form to the Government—one to the honorable Secretary of State I herewith enclose.

In the above-named counties (as also in Northumberland County) there is a large amount of grain; in some instances the crops of the last two years. At present there are no rebels in arms in the northern peninsula. There has been occasional crossing from the northern banks of the Rappahannock, to prevent which I have removed their boats. I ascertain that during the last winter goods have been taken into Virginia, entering the Great Wicomico, and thence transported to Carter's wharf, below the Brisco [Bristoe?] mines by a Mr. J. Hiland, of and in business in Baltimore, and that he had a store, or depot, about 7 miles back of the Brisco [Bristoe?] mines. Some of his goods brought over for reshipment, I have already secured.

There are about 200 deserters from the rebel ranks on the northern peninsula. From intercepted letters I ascertain that there are 1,000 troops at Bowling Green, and that the cavalry, which have been doing picket duty on the southern bank of the Rappahannock, have removed to that station.

Many of the owners of plantations on the southern bank of the Rappahannock have directed their overseers to have all their youngest slaves in readiness to move south.

I am, sir, very respectfully, your obedient servant,

R. H. WYMAN,
Lieutenant, Commanding Flotilla

Hon. GIDEON WELLES,
Secretary of the Navy.

Report of Lieutenant Wyman, U. S. Navy, commanding Potomac Flotilla, regarding dispatch of United States vessels to Hampton Roads.

FLOTILLA, RAPPAHANNOCK AND POTOMAC, *May 22, 1862.*

SIR: In obedience to your order of the 19th instant I have dispatched the steamers *Stepping Stones*, *Island Belle*, and *Cœur de Lion* to Hampton Roads, with orders to report to Flag-Officer Goldsborough. The steamer *Jacob Bell* will proceed immediately on her repairs being completed.

I am, sir, very respectfully, your obedient servant,

R. H. WYMAN,
Lieutenant, Commanding Flotilla.

Hon. GIDEON WELLES,
Secretary of the Navy.

Report of Lieutenant Wyman, U. S. Navy, commanding Potomac Flotilla, of reconnoissance in East River, Va., by steamers Island Belle and Stepping Stones.

FLOTILLA, POTOMAC AND RAPPAHANNOCK, *May 22, 1862.*

SIR: On examination of East River by the steamers *Island Belle* and *Stepping Stones*, I find that the light-boat secreted there has been burned. A party was sent to Mathews Court-House, where the lighting apparatus was reported to be; it was not there. Nine Springfield muskets were taken from the armory at the Court-House, and twenty-three have been delivered up by deserters from the rebels. Considerable numbers of deserters from the rebel Army are crossing the Rappahannock to their homes in Richmond and Lancaster counties; but as yet none have been detected.

I am, sir, very respectfully, your obedient servant,

R. H. WYMAN,
Lieutenant, Commanding Flotilla.

Hon. GIDEON WELLES,
Secretary of the Navy.

Letter from the Secretary of War to the Assistant Secretary of the Navy, regarding the President's order relative to gunboats in the Rappahannock River.

WAR DEPARTMENT, *May 24, 1862.*

DEAR SIR: You remember that on Sunday evening last the President desired that a force of two or three gunboats should be sent up the Rappahannock to Fredericksburg, there to remain in cooperation with General McDowell's force.

Will you be so good as to inform me whether any arrangement or order has been made by your Department to the above effect?

Your obedient servant,

EDWIN M. STANTON.

ASSISTANT SECRETARY OF THE NAVY.

Letter from the Assistant Secretary of the Navy to the Secretary of War, regarding the President's order relative to gunboats in the Rappahannock River.

NAVY DEPARTMENT, *May 24, 1862.*

SIR: I have received your note of this date in reference to the President's order of Sunday last, relative to the gunboats on the Rappahannock.

The President desired that one vessel should be sent to Fredericksburg to defend the bridge there. Captain Wyman, commanding the flotilla, was here this morning and reports one vessel stationed as directed and two or three others below plying up and down the river. Captain Wyman leaves this afternoon for the flotilla, and I beg leave to ask if any arrangement different from the above is desired?

I am, very respectfully, your obedient servant,

G. V. FOX,
Assistant Secretary.

Hon. E. M. STANTON,
Secretary of War.

Letter from the Assistant Secretary of War to the Assistant Secretary of the Navy, relative to arrangement of gunboats in Rappahannock River.

WAR DEPARTMENT,
Washington City, D. C., May 24, 1862.

SIR: I am directed by the Secretary of War to acknowledge the receipt of your communication of this date, and to inform you, in reply, that the arrangement of the gunboats on the Rappahannock, as therein stated, is entirely satisfactory to this Department.

Very respectfully, your obedient servant,

P. H. WATSON,
Assistant Secretary of War.

Hon. G. V. FOX,
Assistant Secretary of the Navy.

Report of Lieutenant Wyman, U. S. Navy, commanding Potomac Flotilla, regarding capture of muskets on Rappahannock River.

FLOTILLA, POTOMAC AND RAPPAHANNOCK,
May 27, 1862.

SIR: I have the honor to forward to the Department through the navy yard two boxes containing muskets, etc., taken on the Rappahannock River, from the pickets at Tappahannock, delivered up by deserters from the rebels on the Piankatank, and taken from Mathews Court-House armory.

I am, sir, very respectfully, your obedient servant,

R. H. WYMAN,
Lieutenant, Commanding Flotilla.

Hon. GIDEON WELLES,
Secretary of the Navy.

Report of Lieutenant Wyman, U. S. Navy, commanding Potomac Flotilla, regarding prize sloop Monitor.

FLOTILLA, POTOMAC AND RAPPAHANNOCK, *June 7, 1862.*

SIR: I have forwarded to the charge of the district marshal the sloop *Monitor*, of Baltimore, taken in the act of leaving the Piankatank River by the U. S. S. *Anacostia*. Her papers, etc., have been forwarded to the district judge.

Those entitled to a share in the capture are the officers and crew of the U. S. S. *Anacostia*.

I am, sir, very respectfully, your obedient servant,

R. H. WYMAN,
Lieutenant, Commanding Flotilla.

Hon. GIDEON WELLES,
Secretary of the Navy.

Report of Lieutenant Wyman, U. S. Navy, commanding Potomac Flotilla, regarding recapture of reflectors belonging to light-boats in Chesapeake Bay, and transmitting copy of notice issued to persons holding military arms.

FLOTILLA, POTOMAC AND RAPPAHANNOCK, *June 11, 1862.*

SIR: I have sent to the navy yard at Washington the reflectors belonging to one of the light-boats on the Chesapeake, seized by the rebels, and have informed the secretary of the Light-House Board that they are subject to his order. These were retaken several miles inland, in Mathews County, Va., by a party from the U. S. S. *Anacostia*.

Upon the retrogade movement of General Banks, many of the rebel deserters on the northern peninsula attempted to cross to rejoin the rebel forces, but were prevented from so doing by the previous destruction or removal of all boats. From the foresight and good management of her commanding officer the steamer [*Thomas*] *Freeborn* sustained no damage when the bridges at Fredericksburg (below which she was anchored) were swept away.

With my approval, the commanding officer of the steamer *Anacostia* issued a notice in Mathews County, Va., a copy of which I enclose. Several stands of arms have since been returned, and I hope to obtain the greater part of them in a short time.

I am, sir, very respectfully, your obedient servant,

R. H. WYMAN,
Lieutenant, Commanding Flotilla.

Hon. GIDEON WELLES,
Secretary of the Navy.

[Enclosure.]

NOTICE.

To all whom it may concern:

It is known to the undersigned that certain persons, residents of the county of Mathews and vicinity, in the State of Virginia, have in their possession arms, placed in their hands for the purpose of opposing the forces of the United States in the lawful discharge of their duties.

All such persons are hereby enjoined and directed to deliver to me, or to other officers that may be appointed hereafter for such purpose, all arms and military accouterments as aforesaid, on pain of being considered and treated as enemies to the United States of America.

Given under my hand, on board the U. S. S. *Anacostia*, near Gwynn's Island, this 27th day of May, 1862.

O. C. BADGER,
Lieutenant, Commanding.

Approved:
R. H. WYMAN,
Lieutenant, Commanding Flotilla.

The above was posted up at Mathews Court-House and at Bell's Mills.

Report of Lieutenant Wyman, U. S. Navy, commanding Potomac Flotilla, regarding the arrest of three men for firing upon boat belonging to U. S. S. Resolute.

FLOTILLA, POTOMAC AND RAPPAHANNOCK, *June 15, 1862.*

SIR: Three men who belonged to a party of Virginia militia, who fired on a boat of the steamer *Resolute* during the last summer, were arrested by order of the commanding officer of the U. S. S. *Anacostia*. As these men are now living at their homes, were but about a month serving under arms, and in this case acting under orders, I have disapproved of the arrest until such time as it may be ordered by the Department.

I am, sir, very respectfully, your obedient servant,

R. H. WYMAN,
Lieutenant, Commanding Flotilla.

Hon. GIDEON WELLES,
Secretary of the Navy.

Report of Lieutenant Wyman, U. S. Navy, commanding Potomac Flotilla, relative to the U. S. steamers Yankee and Powell.

FLOTILLA, POTOMAC AND RAPPAHANNOCK, *June 30, 1862.*

SIR: In obedience to your telegraphic order of this date the U. S. steamers *Yankee* and *Powell* have proceeded with orders to report to Flag-Officer L. M. Goldsborough.

I am, sir, very respectfully, your obedient servant,

R. H. WYMAN,
Lieutenant, Commanding Flotilla.

Hon. GIDEON WELLES,
Secretary of the Navy.

Order of the Secretary of the Navy to Lieutenant Wyman, U. S. Navy, detaching him from command of the Potomac Flotilla.

NAVY DEPARTMENT, *June 30, 1862.*

SIR: You are hereby detached from the command of the Potomac Flotilla, and you will proceed to Portsmouth, N. H., without delay, and report to Captain Pearson for the command of the U. S. steam gunboat *Sonoma*.

I am, respectfully,

GIDEON WELLES,
[*Secretary of the Navy.*]

Lieutenant Commanding R. H. WYMAN, U. S. Navy,
Washington, D. C.

Report of Acting Master's Mate Turner, U. S. Navy, commanding U. S. schooner Dana, of arrival at Philadelphia, Pa.

U. S. SCHOONER DANA,
Philadelphia, July 5, 1862.

SIR: I have the honor to inform you that in accordance with orders received from R. H. Wyman, esq., commanding the Potomac and Rappahannock Flotilla, I have this day arrived at the navy yard, Philadelphia, and reported to the commander in chief.

Most respectfully, your obedient servant,

JAMES W. TURNER,
[*Acting*] *Master's Mate, Commanding.*

Hon. GIDEON WELLES,
Secretary of the Navy.

Report of Acting Master Pierson, U. S. Navy, commanding U. S. schooner Howell Cobb, of arrival at Philadelphia, Pa.

U. S. SCHOONER HOWELL COBB,
Philadelphia Navy Yard, July 9, 1862.

SIR: I make the following report, by orders from Lieutenant Commanding R. H. Wyman:

I have brought this vessel here and reported to the commanding officer.

Very respectfully, your obedient servant,

A. B. PIERSON,
Acting Master, Commanding Schooner Cobb.

Hon. GIDEON WELLES,
Secretary Navy.

Report of Lieutenant Magaw, U. S. Navy, commanding U. S. S. Thomas Freeborn, of arrival at Fredericksburg, Va.

U. S. S. FREEBORN,
Fredericksburg, Va., July 14, 1862.

SIR: I have the honor to report the arrival of the *Anacostia* at this port and inform you that I shall go into the Potomac for a week or ten days.

If Lieutenant Commanding Gibson did not require coal, to be sent to the mouth of the Rappahannock, I beg you will consider the enclosed requisition. The *Anacostia* and *Reliance* have been burning wood.

Very respectfully, your obedient servant,

SAMUEL MAGAW,
Lieutenant, Commanding, and Senior Officer.

Hon. SECRETARY OF THE NAVY,
Washington, D. C.

Order of the Secretary of the Navy to the senior officer Potomac Flotilla, regarding suppression of intercourse between Maryland and Virginia.

NAVY DEPARTMENT, *July 18, 1862.*

SIR: Information has been received that there is a regular night line of communication between Leonard Sound [Breton's Bay?], Maryland,

and the Virginia shore. It is said that bacon, coffee, sugar, whisky, and other articles are carried to Virginia, and corn and wheat brought back. It is not unlikely that mail communication is also carried on. This proceeding should be immediately checked, and the Department directs you to adopt such measures as will accomplish the object.

I am, respectfully, etc.,

GIDEON WELLES.

SENIOR OFFICER POTOMAC FLOTILLA.

Order of the Secretary of the Navy to Lieutenant-Commander Magaw, U. S. Navy, senior officer Potomac Flotilla, regarding matters pertaining to that command.

NAVY DEPARTMENT, *July 22, 1862.*

SIR: The Department desires you to furnish it weekly with a statement of the positions of the several vessels comprising the Potomac and Rappahannock Flotilla, and also to keep it advised of your movements and of matters pertaining to the flotilla.

I am, respectfully, your obedient servant,

GIDEON WELLES.

Lieutenant [Commander] SAMUEL MAGAW, U. S. Navy,
Senior Officer Potomac and Rappahannock Flotilla.

Order of the Secretary of the Navy to Lieutenant-Commander Magaw, U. S. Navy, senior officer Potomac Flotilla, regarding protection for loyal citizens of Mathews County, Va.

NAVY DEPARTMENT, *July 22, 1862.*

SIR: Mr. William L. Walker, at present in Boston, a worthy and loyal man, who was driven from Gwynn's Island, Virginia, by the rebels in April, 1861, has written to the President, who has referred his letter to this Department, asking protection for his family and other Union persons in Mathews County, Va. He has information that, during an absence of three weeks from that locality of the steamer *Anacostia*, a marauding party of cavalry came there and carried off Union men and committed other acts of violence. He said that the lives of many Union men are depending upon the protection of our gunboats. The Department desires you to give this locality attention, and to send a vessel to Milford Haven as often as it can be done without neglecting other important points, and to give all the protection in your power to the loyal citizens who are liable to violence from those engaged in the rebellion.

I am, respectfully, your obedient servant,

GIDEON WELLES.

Lieutenant [Commander] SAMUEL MAGAW,
Senior Officer Potomac Flotilla.

Report of Lieutenant-Commander Magaw, U. S. Navy, senior officer Potomac Flotilla, of arrest of blockade runners.

U. S. S. FREEBORN, *July 29, 1862.*

SIR: I have the honor to report the arrest of three men and capture of some salt (off Corn [Horn] Harbor, Mathews County, Va.) which they

were attempting to run into Virginia; also four others on the Potomac, off Leonardtown, with a small quantity of salt.

I enclose a letter addressed to his Excellency the President from a citizen of Richmond County, Va.

I have the honor to be, your obedient servant, etc.,

SAMUEL MAGAW,
Lieutenant-Commander and Senior Officer.

Hon. GIDEON WELLES,
Secretary of the Navy, Washington, D. C.

Report of Lieutenant-Commander Magaw, U. S. Navy, senior officer Potomac Flotilla, regarding protection to loyal citizens of Virginia.

U. S. S. FREEBORN, *July 30, 1862.*

SIR: I have the honor to acknowledge the receipt of your letter of the 22d.

I have communicated with the relatives of Mr. William L. Walker; they do not require assistance or protection.

In relation to affairs in Mathews, Middlesex, and Gloucester counties, Va., I can not give any positive information as to Union men being oppressed or carried to Richmond. Partisan rangers are constantly making forays in these counties, and I can hear of no arrests being made except those of men who deserted the enemy's ranks after the battle of Williamsburg. If these men remain upon their farms it is impossible to protect them with the vessels of the flotilla. If they go on to Gwynn's Island they have there no means of subsistence.

Mr. Walker (from your letter) implies that the Piankatank had been neglected by the flotilla; it is true the *Anacostia* was absent, but I do not think there has occurred an interval since April of more than four days that some vessel has not been in those waters.

All the residents of that vicinity I have met are bitter, and I have not seen a Union man, except a deserter, in the three counties above mentioned.

I have the honor to be, your obedient servant, etc.,

SAMUEL MAGAW,
Lieutenant-Commander and Senior Officer.

Hon. GIDEON WELLES,
Secretary of the Navy, Washington, D. C.

Report of commandant navy yard, Washington, regarding continued breach of blockade.

NAVY YARD, WASHINGTON, *July 30, 1862.*

SIR: I have the honor to inform you that Mr. William Bailey, a Government pilot, brings information that, from St. George's up to this city, boats are running at all hours of the night. He reports also that boats, laden with provisions and bound to Virginia, are continually crossing from Leonardtown and various other points along the river. He reports that he saw at least fifty of these boats in sight at one time.

I am also informed that permission was given by Lieutenant Commanding Wyman to the storekeeper to cross the river, and other persons have taken advantage of it. A regular business appears to be established and is carried on at all times from the mouth of the Potomac to Maryland Point.

Should the Department think proper to adopt measures to put a stop to the communication referred to, which is apparently increasing in consequence of the withdrawal of part of the Potomac Flotilla, I beg leave to say that the only vessel at my disposal is the *Resolute*, which will be ready on Monday. Acting Master Tole, who commands her, is represented to me as an active and efficient officer.

I have just received the further information, which appears well grounded, that $50 were offered (or paid) to carry over a case of surgical instruments.

I do not doubt that there is a regular mail communication between Baltimore and the rebel lines through the channel indicated, which may and ought to be promptly stopped.

I have the honor to be, with great respect, your obedient servant,

ANDREW A. HARWOOD,
Captain.

Hon. GIDEON WELLES,
Secretary of the Navy.

Order of the Secretary of the Navy to commandant navy yard, Washington, regarding distribution of vessels for suppression of illegal traffic.

NAVY DEPARTMENT, *July 31, 1862.*

SIR: Your letter of the 30th instant, in reference to communication and traffic carried on between Maryland and Virginia, has been received.

Enclosed is an order to Lieutenant Magaw to proceed to Washington and report to you for the purpose of receiving instructions as to the best mode of arresting the evil referred to.

There are four steamers in the flotilla, *Anacostia*, *Thomas Freeborn*, *Reliance*, and *Resolute*. The Department wishes one of them kept at Fredericksburg, one employed from that point to the mouth of the Rappahannock, and the other two employed in the Potomac, for the purpose of preventing improper communication and traffic between Maryland and Virginia shores.

Craft that may be caught in this service should be destroyed, if not of sufficient value to be sent to Washington, and the parties engaged or implicated in it should be arrested and turned over to the proper authorities.

You will give Lieutenant Magaw such instructions as will be most likely to accomplish the object in view.

I am respectfully, your obedient servant,

GIDEON WELLES,
Secretary of the Navy.

Captain A. A. HARWOOD,
Commandant Navy Yard, Washington.

Report of Lieutenant-Commander Magaw, U. S. Navy, senior officer Potomac Flotilla, transmitting report of Acting Master Plunkett, U. S. Navy, U. S. S. Thomas Freeborn, of the seizure of the schooner Mail.

U. S. S. FREEBORN,
Coan River, Va., August [1], 1862.

SIR: I have the honor to report that I seized the schooner *Mail*, trading in Virginia, with salt, bacon, etc., and enclose the report of Acting Master Plunkett.

The master and one of the owners of the *Mail* I send under charge of Acting Master McGowan to Washington, and will await your orders as to the disposition of the vessel. The captain claims to be trading in Virginia under authority of the Treasury Department.

Very respectfully, your obedient servant,

SAMUEL MAGAW,
Lieutenant-Commander and Senior Officer.

Hon. GIDEON WELLES,
Secretary of the Navy, Washington, D. C.

[Enclosure.]

U. S. S. THOMAS FREEBORN,
Potomac Flotilla, August 1, 1862.

SIR: In obedience to your orders, I took the launch with an armed crew and proceeded up Coan River in search of a schooner reported to have violated the blockade of this river. After having pulled about 6 miles I discovered the schooner discharging her cargo at a small wharf, assisted by a number of men and teams, who were apparently using every exertion to discharge her before we reached the wharf.

After firing several shots at them they desisted and retired to the woods. I then ran alongside and took the schooner in tow, and proceeded down the river without any molestation. I found on board the schooner about 75 bags of salt, a large quantity of wheat and groceries, together with some whisky, and 1 box of musket balls.

The crew, of whom there are six, two of whom claim to be owners, which consists of five men and a boy, are still on board.

I am, sir, very respectfully, your obedient servant,

JAMES L. PLUNKETT,
Acting Master and Executive Officer.

Lieutenant-Commander SAMUEL MAGAW,
Senior Officer Potomac Flotilla.

Order of the Secretary of the Navy to commandant navy yard, Washington, for the release of schooner Mail.

NAVY DEPARTMENT, *August 7, 1862.*

SIR: Upon the request of the honorable Secretary of the Treasury, you are hereby directed to release the schooner *Mail*.

I am, respectfully, your obedient servant,

GIDEON WELLES,
Secretary of the Navy.

Captain A. A. HARWOOD,
Commandant Navy Yard, Washington, D. C.

Report of Lieutenant-Commander Magaw, U. S. Navy, senior officer Potomac Flotilla, regarding distribution of vessels.

NAVY YARD, WASHINGTON, *August 3, 1862.*

SIR: I have the honor to acknowledge the receipt of your letter of 22d ultimo, although not until to-day. The *Anacostia* remains at Fredericksburg, Va. The *Reliance* cruises in the Rappahannock and Piankatank. The *Freeborn* has been for the past week from Piankatank to the Lower Machodoc, in the Potomac. *Resolute* and *Wyandank* are at the yard.

I have the honor to be, yours respectfully, etc.,

SAMUEL MAGAW,
Lieutenant-Commander and Senior Officer.

Hon. SECRETARY OF THE NAVY,
Washington, D. C.

Letter from the Secretary of the Navy to commandant navy yard, Washington, transmitting information regarding breach of blockade in Potomac River.

NAVY DEPARTMENT, *August 5, 1862.*

SIR: I transmit herewith for your information a copy of a letter and enclosure received from Governor Hicks, in reference to communication carried on by the rebels across the lower Potomac.

Very respectfully, etc.,

GIDEON WELLES,
Secretary of the Navy.

Captain A. A. HARWOOD,
Commandant Navy Yard, Washington.

[Enclosure.]

CAMBRIDGE, [MD.], *August 1, 1862.*

DEAR SIR: I herewith enclose a letter from J. M. Frazier, esq., whom I know well. He is a respectable, reliable Union man. Mr. Needham I know nothing of. That an extensive carrying of clothing, provisions, etc., is going on upon and across the lower Potomac I am thoroughly satisfied, as I am in the receipt of a letter from a man that I had employed for six or eight months as a spy on the Potomac, and until the Government put forces on the river. This man is entirely reliable and has been down to St. Mary's County, and assures me by letter that a constant going and coming over the Potomac is kept up by Confederate persons coming, letters brought and carried, etc.

I feel it my duty to advise of these things.

I am, very respectfully, yours, etc.,

THOS. H. HICKS.

Hon. GIDEON WELLES,
Secretary of the Navy.

[Subenclosure.]

BALTIMORE, *July 29, 1862.*

DEAR SIR: My friend George F. Needham, esq., of the old and well-established firm of Needham & Sons, has suggested to many persons here a plan for suppressing communication between the Maryland rebels and those in Virginia. This communication, as you are aware,

is kept up by the rebels in the counties bordering on the Potomac. Mr. Needham suggests that the Government shall fit up a steam tug, to be placed somewhere near the mouth of the Potomac, to have a number of smaller boats attached to it for the purpose of sending them out on the river as a night police. He is well acquainted with the locality named, and is willing to leave a large and profitable business for the purpose of commanding the tug. He is well satisfied that he can put a stop to the communication that is daily going on and by means of which the rebels are receiving information of all our movements. * * *

Very respectfully,

JOHN M. FRAZIER.

Governor THOS. H. HICKS,
Cambridge, Md.

Report of commandant navy yard, Washington, regarding measures for suppression of communication between Maryland and Virginia.

COMMANDANT'S OFFICE, NAVY YARD,
Washington, August 6, 1862.

SIR: I have received your letter of yesterday, together with its enclosures from Governor Hicks, in relation to the communication carried on by vessels between the Maryland and Virginia shores.

In consequence of information from another source of the same character, and your recent order to me, Lieutenant Magaw left the yard furnished with all the information in my possession and such instructions and appliances as seemed most likely to put a stop to the communication between the enemies of the Union on both sides the river. Only one barge was sent, to avoid delay, but I have given directions for the preparation of several others to be kept in readiness for this and similar occasions and shall avail myself of every opportunity to keep the commanding officer of the flotilla informed and provided in every respect in my power, in the hope of effectually putting a stop to the transmission of information and supplies to the enemy.

I have the honor to be, very respectfully, your obedient servant,

ANDREW A. HARWOOD,
Commandant.

Hon. GIDEON WELLES,
Secretary of the Navy.

Letter from commandant navy yard, Washington, to the Assistant Secretary of the Navy, suggesting measures for a more effective blockade in the Potomac River.

NAVY YARD, WASHINGTON, *August 8, 1862.*

MY DEAR SIR: I mentioned that I had provided Mr. Magaw with a boat for the preventive service upon which the flotilla is employed and intended to fit out one or two more; but the boats we have here are all too large. There should be at least two whaleboats or light cutters that could easily be run up by the vessels.

It would take at least three weeks to build such boats here, and we ought to have them at once.

Will you not direct one 6 and one 8 oared boat to be sent here, if there are any such at Norfolk, Baltimore, or Philadelphia?

To break up the unlawful communication between the Union side and rebeldom speedily and effectually will require the services of a peculiarly active and ambitious officer.

From what I hear and know of young Selfridge, whose submarine experiments are not very promising, I am under the impression he would bring about good results if he could be placed in command of the flotilla.

Yours, very truly,

AND. A. HARWOOD.

Hon. GUSTAVUS V. FOX,
Assistant Secretary of the Navy.

P. S.—*Wyandank* will be ready to sail to-morrow morning; please send any instructions you may have respecting her to-day.

Report of Lieutenant-Commander Magaw, U. S. Navy, senior officer Potomac Flotilla, regarding disposition of vessels and seizures made.

U. S. S. FREEBORN, *August 10, 1862.*

SIR: I respectfully beg leave to submit the following statement of the position and doings of the vessels of the Potomac, etc., Flotilla, during the past week:

The *Anacostia* remains at Fredericksburg, the *Resolute* is cruising on the Rappahannock, and the *Freeborn* and *Reliance* on the Potomac. Sixteen white and nine colored men have been arrested in the Potomac and turned over to the provost-marshal at Washington. Two hundred and three bushels of wheat, 10 sacks of salt, 30,000 cigars (about), 28 ounces of quinine, 12 ounces of morphine, 4 pounds of opium, and a quantity of tea, coffee, medicines, etc., which none of the prisoners would own, have been seized.

These men were arrested on charge of violating the blockade.

I have the honor to be, your obedient servant,

SAMUEL MAGAW,
Lieutenant-Commander.

Hon. GIDEON WELLES,
Secretary of the Navy.

Report of Lieutenant-Commander Magaw, U. S. Navy, senior officer Potomac Flotilla, requesting information regarding authority of revenue steamers.

U. S. S. FREEBORN, *August 10, 1862.*

SIR: I respectfully request information in relation to the instructions of certain revenue vessels cruising in the Potomac River and Chesapeake Bay. Several men I have arrested have said they had the permission of the revenue steamer *Hercules* to cross into Maryland and return to Virginia.

I have the honor to be, yours, faithfully,

SAMUEL MAGAW,
Lieutenant-Commander, etc.

Hon. GIDEON WELLES,
Secretary of the Navy.

Order of the Secretary of the Navy to Lieutenant-Commander Magaw, U. S. Navy, senior officer Potomac Flotilla, regarding permits to vessels in the Potomac River.

NAVY DEPARTMENT, *August 11, 1862.*

SIR: I have received your letter of the 10th instant reporting your proceedings; also your letter of the same date asking instructions in relation to certain revenue vessels cruising in the Potomac River and Chesapeake Bay.

No vessels except such as are in the Government service will be permitted to pass in or out of the waters of Virginia without the special permit of the Secretary of the Treasury or of the War or Navy Departments.

I am respectfully, etc.,

GIDEON WELLES.

Lieutenant-Commander SAMUEL MAGAW,
Senior Officer, etc., Potomac Flotilla, etc.

[Telegram.]

NAVY YARD [WASHINGTON, D. C.], *August 11, 1862.*
(Received 9:40 p. m.)

The *Freeborn* arrived yesterday with twenty-odd prisoners captured in the vicinity of Leonardtown, three large boats, a quantity of quinine, percussion caps, bags of wheat, etc. Particulars will be forwarded as soon as Lieutenant [Commander] Magaw's report is received. He is now engaged with the provost-marshal.

A. A. HARWOOD,
Commandant.

SECRETARY OF NAVY.

Report of Lieutenant-Commander Magaw, U. S. Navy, senior officer Potomac Flotilla, of seizure of men and contraband stores.

U. S. S. FREEBORN,
Potomac Flotilla, August 11, 1862.

SIR: In obedience to your instructions of August 4, I beg to report the arrest of sixteen white and nine colored men on the Potomac River for engaging in improper communication and traffic between Maryland and Virginia. With these parties I seized a quantity of stores, or articles contraband. The prisoners have been turned over to the proper authorities.

Very respectfully, your obedient servant,

SAMUEL MAGAW,
Lieutenant-Commander, etc.

Commodore A. A. HARWOOD,
Commanding Navy Yard, Washington, D. C.

Order of commandant navy yard, Washington, to Lieutenant-Commander Magaw, U. S. Navy, senior officer Potomac Flotilla, regarding suppression of trade in the Rappahannock River.

NAVY YARD, WASHINGTON, *August 12, 1862.*

SIR: You are hereby directed to permit no trade up the Rappahannock, unless by army chartered vessels. You will also see that no

towing is done by any vessel of the flotilla under your command, except on an emergency, which must be immediately reported.

Very respectfully, your obedient servant,

ANDW. A. HARWOOD,
Commodore.

Lieutenant-Commander SAMUEL MAGAW,
Potomac Flotilla.

Order of the Secretary of the Navy to commandant navy yard, Washington, for the suppression of illicit trade between the York and Potomac rivers.

NAVY DEPARTMENT, *August 14, 1862.*

SIR: It is represented that considerable smuggling is carried on between the York River and the Potomac River, and as Rear Admiral Goldsborough has not at present a steamer to spare for the purpose of making an examination of the coast and streams between those rivers, you will please direct Lieutenant-Commander Magaw to do so as early as practicable.

I am, respectfully, your obedient servant,

GIDEON WELLES.

Commodore A. A. HARWOOD,
Commandant Navy Yard, Washington, D. C.

Report of commandant navy yard, Washington, transmitting report of Lieutenant-Commander Phelps, U. S. Navy, commanding U. S. S. Corwin, of extensive illicit trade.

NAVY YARD, WASHINGTON, *August 14, 1862.*

SIR: Herewith you will find a report of Lieutenant-Commander Thomas S. Phelps, giving further information of the illicit intercourse between the shores of Maryland and Virginia.

I have made a careful memorandum of all the points covered by this letter, and will send the commanding officer of the flotilla such information and instructions as the case seems to require.

Permit me to draw your attention to that clause in the letter in which Captain Phelps states that he has been informed that permission is obtained from the military governor of the district to touch at certain creeks in Virginia, and that this permission is abused. I feel quite convinced that the mere love of gain induces many persons on the border to "blow hot and cold" in the matter of allegiance, and therefore feel anxious that the authorities who are empowered to grant passes should be made aware that not only contraband goods, but spies, have free circulation by these means.

I have the honor to be, with great respect, your obedient servant,

ANDREW A. HARWOOD,
Commodore, Commanding Navy Yard.

Hon. GIDEON WELLES,
Secretary of the Navy.

[Enclosure.]

U. S. S. CORWIN,
Off Washington, August 13, 1862.

SIR: I respectfully report that while prosecuting the survey of the middle Potomac I have learned the following in regard to the extensive

trade between Maryland and Virginia, viz: Although to a certain degree extending from St. Mary's River to Swan Point, the principal depots appear to be Leonardtown and Wicomico Bay [Md.]. I am positive the trade is larger from the latter place.

Articles of almost every description are exchanged for wheat, corn, fruits, and Virginia money, at a discount of from 40 to 50 per cent, and are carried in flatboats or small schooners (frequently manned entirely by negroes), often by daylight, but principally at night. Nomini River, Pope's, Bridge, Mattox, Rosier's, and Upper Machodoc creeks are the most prominent places where the goods are landed, and from thence they find their way to the Rappahannock, the York, Richmond, and beyond. Nearly all the grain bound to the Maryland shore is exchanged for articles to be sent South.

A Mr. C. C. Spalding, of Chaptico, St. Mary's County, Md., is the principal furnisher in Wicomico Bay.

Fishing schooners, or vessels passing for such, are much engaged in this traffic. As a general rule all boats and small schooners bound to the Virginia shore may be considered as being engaged in trading or in carrying mails or passengers.

I have been informed of another method pursued, viz: A Virginian or other person, owning or commanding a small schooner or sloop, takes the oath of allegiance to the United States, clears from Alexandria or Georgetown for Baltimore, Md., and from thence back; but before leaving the former place procures from the military governor of the district permission to touch at certain creeks in Virginia to carry away grain which he happens to own. This class of people, if I credit the testimony of their neighbors, is frequently loyal to both Governments, and the grain is either purchased from rebels or owned wholly by them, and in removing the grain they often carry violent rebels with it to Baltimore, who return through Maryland.

I am, very respectfully, your obedient servant,

THOS. S. PHELPS,
Lieutenant, Commanding, U. S. Navy.

Captain A. A. HARWOOD, U. S. Navy,
Commanding Navy Yard, Washington, D. C.

Instructions from commandant navy yard, Washington, to Lieutenant-Commander Magaw, U. S. Navy, senior officer Potomac Flotilla, for suppression of contraband trade.

NAVY YARD, WASHINGTON, *August 14, 1862.*

SIR: Upon receipt of this you will dispatch one of the steamers under your command to make a close examination of the coast and streams between the York River and the Potomac River as early as practicable. Smuggling to a considerable extent is represented as being carried on between these rivers, and you will instruct the officer detailed for this service to use every effort to break up contraband operations and to obtain as much information as he can as to the nature and extent of such operations in this quarter and the localities from which they are conducted.

You will report the result fully and promptly.

Further information has been received with relation to these illicit operations in the Potomac River.

I note briefly the prominent points furnished by Lieutenant-Commander Phelps, of the Coast Survey steamer *Corwin*:

To a certain degree this trade extends from St. Mary's River to Swan Point, but the principal depots appear to be Leonardtown and Wicomico Bay, from which place the trade is greater.

It is carried on in flatboats or small schooners (frequently manned entirely by negroes), often by daylight, but principally at night. Nomini River, Pope's, Bridge, Mattox, Rosier's, and Upper Machodoc creeks are the most prominent places where the goods are landed, and thence they find their way to the Rappahannock and the York rivers, to Richmond and beyond.

Nearly all the grain bound to the Maryland shore is exchanged for articles to be sent South.

A Mr. C. C. Spalding, of Chaptico, St. Mary's County, Md., is the principal furnisher in Wicomico Bay.

Fishing schooners, or vessels passing for such, are much engaged in this traffic.

As a general rule all boats and small schooners bound to the Virginia shore may be considered as either engaged in trading illicitly or in carrying mails and passengers.

From Pope's Creek and the creek above it, and the inlet on the opposite shore in the neighborhood of Cobb's Point, there is much of this traffic going on.

If you have any of the ordinary bateaux or flat-bottomed boats with sliding keels in your possession, or can get hold of any, by putting an armed crew properly disguised in the rough dress of the country on board of them and visiting these localities at night, you will be able to capture a number of these traders.

I rely upon your activity and discretion, and hope soon to hear of further results of your efforts.

Very respectfully, your obedient servant,

ANDW. A. HARWOOD,
Commodore.

Lieutenant-Commander SAMUEL MAGAW.

Order of the Secretary of the Navy to commandant navy yard, Washington, for the rigid enforcement of blockade.

NAVY DEPARTMENT, *August 16, 1862.*

SIR: I have received your letter of the 14th instant, enclosing report of Lieutenant-Commander T. S. Phelps.

General Wadsworth assures me that he gives no permits. There must be an entire interdiction of all traffic until the blockade is raised. The flotilla will be vigilant to enforce the blockade and seize all vessels that violate it.

I am, respectfully, etc.,

GIDEON WELLES.

Commodore A. A. HARWOOD,
Commandant Navy Yard, Washington.

Report of commandant navy yard, Washington, regarding capture of prize sloop Blossom, and skirmish in Sturgeon Creek, Virginia.

COMMANDANT'S OFFICE, NAVY YARD,
Washington, August 16, 1862.

SIR: I have the honor to inform you that the steam tug *Leslie* arrived here last night, bringing with her the sloop *Blossom*, a prize to the *Reliance*, captured by Acting Master Josselyn, on the 12th, off Currioman Bay.

There were eight persons on board of the *Blossom*, one of whom, named Bagley, is reported as having been engaged in traffic between Virginia and Maryland for upward of a year. There were also 30 sacks of wheat on board this vessel.

On the 11th instant, Acting Master Josselyn chased and ran on shore a small sloop which was attempting to cross to Virginia from Breton's Bay. The crew escaped, destroying or carrying with them everything except some salt and 2 hogsheads of sugar.

The prisoners, vessel, and prize goods are secure and will be handed over to the provost-marshal according to instructions.

On the 12th instant Acting Master Tole endeavored to bring out of Sturgeon Creek [Virginia] a schooner and sloop which had been running the blockade. These vessels were both aground. The sloop was got afloat, but, in towing her down the creek, the boat was fired upon from the woods and a skirmish ensued, in which three of the boat's crew were slightly wounded and the enemy driven off. The sloop, however, got aground, and Mr. Tole abandoned her, to use his own expression, not wishing to burn her up.

This is the substance of the events reported by Lieutenant Commanding Magaw, further particulars of which will be communicated more at leisure.

He calls my attention to the activity and diligence of Acting Master Josselyn, commanding the *Reliance*, who, from all I hear, is worthy of commendation.

Lieutenant Commanding Magaw has been obliged to beach the prize schooner *Sabine*, loaded with coal. She leaked badly and her pumps were choked. The coal can be saved.

I have the honor to be, with great respect, your obedient servant,

ANDREW A. HARWOOD,
Commandant.

Hon. GIDEON WELLES,
Secretary of the Navy.

Letter from commandant navy yard, Washington, to Lieutenant-Commander Magaw, U. S. Navy, senior officer Potomac Flotilla, regarding the skirmish in Sturgeon Creek and other matters.

COMMANDANT'S OFFICE, NAVY YARD,
Washington, August 18, 1862.

SIR: I have received your letter of the 15th instant with the enclosed reports* of Acting Master J. C. Tole and Francis Josselyn. With reference to the skirmish in Sturgeon Creek, [Virginia], I have to remark that it is never proper to risk the lives of men for an inadequate object.

Whether that object is adequate or not can best be decided by those who are on the spot and have the work to do. Consequently, a wide margin of discretion must be allowed to the officer in command, upon whom the responsibility rests.

In making attempts to cut vessels out in open boats, reliable information as to the probability of resistance being made and the extent of the means of resistance should be obtained, and the force sent should be regulated accordingly.

---

*Not found.

These precautions are absolutely obligatory on the officer in command.

I do not intend to censure Acting Master Tole without knowing more of the circumstances connected with the affair, but I wish you to explain these general principles to him and ask him why, after his party had been attacked and had driven off the assailants, he did not destroy the vessel to prevent her from being used for the purposes to prevent which he attempted to take her out.

The boat's crew are worthy of commendation for their good conduct, and I hope you will take such notice of them in the way of advancement as may be in your power.

The prisoners taken in Breton's Bay by the *Reliance* were all delivered to the provost-marshal, the woman sent up with them only was discharged, and coming upon our hands at the navy yard, I send her back in the *Leslie* to be restored to her home. In all similar cases for the future you will please avoid sending women here unless you have positive proof of their disloyalty, as, if dismissed by the authorities, they come back at once upon those who have no accommodation for them.

I wish you to write me freely in semiofficial form, if you prefer it and think it would further the service.

With regard to the arrest of certain citizens of Maryland and Virginia, the Department could not delegate the power to you; but you are particularly enjoined discreetly and diligently to obtain sufficient evidence against them, and the arrest will be made by authority of the War Department.

I have mentioned to the Department the necessity of increasing your force, and the Secretary expressed himself disposed to do so. I will see if the Department will bid for the *Eureka*, which is to be sold on Thursday, and if possible have her fitted for you.

A couple of whaleboats are on their way from New York, which I will place at your disposal if you think they will be of service.

I have not seen the paymaster's clerk, though enquiry has been made for him, but will send him down by the first opportunity after his return. I enclose a copy of the letter from the Secretary of the Navy in relation to the blockade of the river.

It seems that permits were shown by some of the vessels said to be from General Wadsworth and you will put the officers under your command on their guard against forgeries, and give them each a written order that there must be an entire interdiction of all traffic until the blockade is raised.

Very respectfully, your obedient servant,

ANDW. A. HARWOOD,
Commodore, Commanding.

Lieutenant-Commander SAMUEL MAGAW,
Potomac Flotilla.

Report of commandant navy yard, Washington, of seizure, by U. S. S. Resolute, of schooner S. S. Jones, and of expedition to Sturgeon Creek, Virginia.

COMMANDANT'S OFFICE, NAVY YARD,
Washington, August 23, 1862.

SIR: The *Resolute* arrived here this morning with the schooner *S. S. Jones*, which was taken possession of by Acting Master James C. Tole on the 11th instant.

The *Jones* had on board of her the dead body of Mr. Gersham, attended by Mrs. Gersham, two other ladies, and a gentleman, all belonging to Virginia. This party was permitted to land.

The schooner had a conditional clearance from the custom-house at Baltimore; a few articles, however, did not appear on her manifest.

On the 21st instant Mr. Tole, accompanied by Acting Master Josselyn, of the *Reliance*, in a launch manned from that vessel and the *Resolute*, went into Sturgeon Creek to cut out or destroy two vessels; they found these vessels had been scuttled and destroyed them by fire. On the return of the launch it was fired on by a party from the bushes and Michael Ryan, landsman, was instantly killed by a shot through the head; Mr. Newton, master's mate, was wounded in the leg, and two of the crew of the *Reliance* were slightly hurt. The enemy was driven off, it is supposed with some loss, but to what extent was not ascertained, the care of the wounded preventing our men from landing.

Our men are described as behaving with their accustomed coolness and bravery.

The body of Michael Ryan has been brought to the yard, and measures have been taken to bury it, according to the request of his friends, in the Catholic cemetery this afternoon.

The *Resolute* brings also two refugees.

On the night of the 13th instant all possible assistance was rendered by Acting Master Josselyn and Master's Mate Crandall to the passengers, invalid soldiers, and crew of the West Point army transport which was run into by the *George Peabody*. Many persons were saved, among them Colonel Scott and several other officers, by the exertion of the officers and the men of the flotilla who were present at the scene of the disaster.

I am informed that the contraband trade is still going on, even by daylight, whenever the vessels of the flotilla are absent, and that horses and recruits for the rebel Army are transported in large scows and flat-bottomed boats, which are kept concealed in the bushes. A thorough scouring of this section is absolutely necessary in order to put a stop to these operations, and for that purpose a reenforcement of vessels and men is required.

I can only supply three of the five men Mr. Tole requires to take the place of the wounded men of his crew.

I have the honor to be, very respectfully, your obedient servant,

ANDREW A. HARWOOD,
Commandant.

Hon. GIDEON WELLES, *Secretary of the Navy.*

[Telegram.]

FALMOUTH, VA., *August 23, 1862—10:44 a. m.*
(Received at Washington 11 a. m.)

The schooner *Active* lies here loaded with furniture for Mr. Clarke; wants to be towed down. Steamer *Reliance* is here. Shall I have the schooner towed down by her? Steamer *Reliance* goes down this afternoon, she having come up here with some wounded men by order General Burnside.

NELSON PROVOST,
Acting Master, Commanding U. S. S. Anacostia.

Hon. GIDEON WELLES, *Secretary of the Navy.*

Report of commandant navy yard, Washington, transmitting reports relative to expedition to Port Royal, Va., and other matters.

COMMANDANT'S OFFICE, NAVY YARD,
Washington, August 25, 1862.

SIR: Enclosed you will find a report in relation to some operations which have taken place near Port Royal Ferry [Va.], by a party from the *Anacostia*, Acting Master Provost, and a detachment from the Army.

In the letter from the lieutenant-commander, Magaw, in which this enclosure was forwarded, I find two points to which I beg leave to call the attention of the Department:

First. The traffic between Maryland and Virginia is much diminished, but large numbers of men from Charles and St. Mary's counties, it is said, have crossed to escape drafting. That Lieutenant-Commander Magaw has been correctly informed in this particular is evident from the list of persons reported by Mr. Provost, in which the names of well-known Maryland families occur.

Second. Lieutenant-Commander Magaw requires more men, having none to man the launches sent him.

He also asks for two additional master's mates, and remarks that he has no one to recommend from the flotilla.

I have the honor to be, with great respect, your obedient servant,

ANDREW A. HARWOOD,
Commandant.

Hon. GIDEON WELLES,
Secretary of the Navy.

[Enclosure.]

U. S. S. FREEBORN,
Potomac Flotilla, August 23, 1862.

SIR: I have the honor to report the positions of the vessels under my command for the past two weeks. The *Freeborn* has been in the Rappahannock for a day, the rest of the time between Lower Cedar Point and St. Mary's River, in the Potomac, the *Reliance* and *Resolute* relieving each other from the Rappahannock to the Potomac. The *Anacostia* remains at Fredericksburg. I enclose the report of Acting Master Provost, commanding the *Anacostia*, of an expedition (by order of General Burnside) to Port Royal (on the Rappahannock). I have instructed Mr. Provost to comply with any request the commanding officer of the land forces may make. The traffic between Maryland and Virginia is much diminished, but large numbers of men from Charles and St. Mary's counties, I learn, have crossed to escape drafting.

I am obliged for the launches, Nos. 1 and 2, but without men and officers they are useless.

I intended going to Washington in person, but the absence of the *Resolute* will not permit my leaving until she returns.

I will require two additional acting master's mates, and I have no one to recommend from the flotilla.

Very respectfully, your obedient servant,

SAMUEL MAGAW,
Lieutenant-Commander.

Commodore A. A. HARWOOD,
Commanding Navy Yard, Washington, D. C.

[Subenclosure.]

U. S. S. ANACOSTIA,
Fredericksburg, August 16, 1862.

SIR: In pursuance of orders from Major-General Burnside, I went on board the steamboat *Cooper's Point*, Captain O. Lachemeyer, with a detachment of six men of the crew of the U. S. gunboat *Anacostia* and twenty-five of the Ninth New York Volunteers (Hawkins Zouaves), in command of Lieutenant [Geo. H.] Herbert. The whole force was armed and we also had the two brass howitzers which are attached to Lieutenant Herbert's company.

Our point of destination was Port Royal, a small town, some 35 miles below Fredericksburg on the Rappahannock River, where we were credibly informed that regular communication was had with Richmond and Baltimore.

On the way down I landed at several plantations and found them deserted by the proprietors. From information received from contrabands I was led to believe that recruits for the rebel Army were being ferried across the river to Port Royal, and passed thence to Richmond, and that arms, goods, and stores of various kinds were also safely sent by the same route.

Accordingly, I hauled my vessel up the stream and waited for night. About midnight a negro named Richard Parker brought me word that a wagonload of goods had arrived and was waiting transportation across the river. Taking Captain Lachemeyer and ten men I ascended the bank and a short distance from the ferry found and arrested three young men, who acknowledged that they were on their way to Richmond to join the rebel Army. About half an hour later a party of ten more in a four-horse wagon came up and were met and held in talk by Captain Lachemeyer (who led them to suppose him to be a rebel soldier) until I arrived with a fresh detachment and took them prisoners.

Part of them were armed with pistols, but a careful search of their baggage revealed no papers except some of little importance, which were sent to General Burnside, and some letters, which accompany this report.

I also destroyed several small boats at Port Royal and burned the canal boat, which they used to ferry persons across the river. This boat was raised during the last freshet and used for the purpose named, or else was floated off from the bank.

The following are the names of the prisoners taken, who were handed over to the provost-marshal at this place:

A. Grins, Morgan E. Harris, W. H. Archer, John L. Welch, E. K. Goldsborough, Albert Mudd, George Mudd, C. R. Hodges, W. S. Winder, M. Thompson, H. Burch, Lloyd Lowndes, G. C. Burch.

I have the honor to be, very respectfully, your obedient servant,

NELSON PROVOST,
Acting Master, Commanding Anacostia.

Lieutenant-Commander SAMUEL MAGAW,
Comdg. Potomac and Rappahannock Flotilla, U. S. S. Freeborn.

[Telegram.]

NAVY DEPARTMENT, *August 24, 1862.*

Send immediately, if not already done, one of the double-end gunboats and four lighter draft boats to Aquia Creek to cooperate with the Army. Let them report by letter to the Department.

GIDEON WELLES,
Secretary of the Navy.

Commodore CHARLES WILKES,
Commanding James River Flotilla, Fortress Monroe.

[Telegram.]

FALMOUTH [VA.], *August 24, [1862]—2:20 p. m.*
(Received at Washington 2:50 p. m.)

The five or six gunboats which were to be sent to Aquia Creek have not yet arrived. It is advisable that they should be sent there at once.

A. E. BURNSIDE,
Major-General.

SECRETARY OF THE NAVY.

[Telegram.]

FORTRESS MONROE, *August 25, 1862.*
(Received at Washington, D. C., August 26—11 a. m.)

SIR: The vessels, one double-ender and four smaller steamers of light draft, have been dispatched, agreeably to your order by telegram. They will report to you on arrival at Aquia Creek by letter.

Respectfully, yours,

CHARLES WILKES,
Commanding James River Flotilla.

Hon. SECRETARY OF THE NAVY,
Washington.

Letter from the Secretary of the Navy to Commodore Wilkes, U. S. Navy, commanding James River Flotilla, relative to gunboats for duty in Aquia Creek, Virginia.

NAVY DEPARTMENT, *August 25, 1862.*

SIR: I sent you a telegram yesterday, directing that five gunboats be sent immediately to Aquia Creek to cooperate with the Army. This order was in a verbal requisition to the Department for five or six light-draft gunboats at that point. I did not specify which boats, for I knew not which boats could be spared with least detriment to you. They will doubtless have been dispatched before this reaches you.

The change that has taken place in the army movements and the withdrawal of the troops from the Peninsula will render necessary a corresponding change in the flotilla, which was organized to cooperate with and aid the Army in its then contemplated demonstration upon Richmond.

Until the military forces shall have become consolidated under the new order, the flotilla will continue to menace Richmond, but the Department is not prepared to advise offensive operations, nor do I

know that it is expected. In a few days the flotilla will in all probability be relieved, and, as soon as it can be, a considerable portion of its gunboats will be detached and ordered to other duty.

I am, respectfully, your obedient servant,

GIDEON WELLES,
Secretary of the Navy.

Commodore CHARLES WILKES,
Commanding James River Flotilla.

Letter from commandant navy yard, Washington, to Lieutenant-Commander Magaw, U. S. Navy, senior officer Potomac Flotilla, giving information of the operations of a smuggler.

COMMANDANT'S OFFICE, NAVY YARD,
Washington, August 26, 1862.

SIR: I forward for your information, careful examination, and discreet action some memoranda derived from a source which entitles them to confidence.

There is a person, whose name I glean to be Sable (this is probably incorrect, but the name is not of much consequence), who is driving an extensive contraband trade. He comes over twice a week from the Virginia shore and goes into Smith's Creek, which is between Point Lookout and St. Mary's River.

A fortnight ago to-day he carried over with a small sloop in company nearly 200 persons, some of whom he brought to the Maryland side with him, but a large number were recruits from that State.

The individual has a large canoe, capable of carrying fifty or more persons. She has a white bottom, dark gunwales, two leg-of-mutton sails, foresail bright and new, mainsail not more than half as large as the fore, of dark color, mildewed and old.

The owner is usually disguised as a fisherman and has with him three persons in the daytime.

The depot on the Maryland side is in Smith's Creek, up a long, unfrequented cove, to Mr. Edward Able's landing. From this point he goes to St. Inigoes, where he is said to be supplied with various articles from a store kept by two persons—Taylor and Bean. One of them is postmaster and the other collector of the county taxes, but both are spoken of as rank rebels. If, therefore, you come in contact with them be upon your guard, as they may mislead you and will no doubt profess loyalty. Do not let them know you suspect them. The distance from St. Inigoes to Able's is short and they put out at a favorable moment.

The smugglers have to pass the collector's office. He is not accused of being a traitor, but is said to be afraid. I do not wish you to communicate more of these particulars to your officers than is necessary. They may be of use to you in forming your plans. I would recommend you to proceed cautiously with this wary rogue, and I do not think it best that the large vessels of the flotilla should appear too near his tracks. The *Wyandank* will join your flotilla as soon as she receives her coal and guns. I have pointed out the different places referred to in this letter upon the chart and he informs me he knows something of them.

He will have men enough to fit out a boat expedition, which, if managed quietly and the boats' crews disguised, I think will result in the capture of the smugglers and some at least of his gang.

His starting point from the Virginia shore is from a small creek known as Presley's Creek, 5 or 6 miles below the mouth of Coan River. I have pointed out the localities to Acting Master McGowan and directed him to show them to you and give you my views as to some of the details of the expedition. You will, however, use your own discretion, as, being upon the spot, you have better opportunity of knowing what to do and how to do it.

With best wishes for your success. I am, very respectfully, your obedient servant,

ANDW. A. HARWOOD,
Commodore.

Lieutenant-Commander S. MAGAW, U. S. Navy,
Commanding Potomac Flotilla.

Report of Acting Master Josselyn, U. S. Navy, commanding U. S. S. Reliance, of depredations committed by army transports near the mouth of the Rappahannock River.

U. S. S. RELIANCE, *August 26 1862.*

SIR: I have the honor to report to you that, in my absence up the river to Fredericksburg, the steam transports *Telegraph* and *Rotary* came into the mouth of the Rappahannock and the crews from both vessels went on shore and robbed the houses on shore, breaking into the women's trunks, taking their jewelry and clothes, and taking their beds away with them.

Respectfully, your obedient servant,

F. JOSSELYN,
Acting Master, Commanding.

Lieutenant-Commander SAMUEL MAGAW,
Commanding Flotilla, Potomac and Rappahannock.

Report of Acting Master Foster, U. S. Navy, commanding U. S. S. Satellite, of arrival at Aquia Creek.

U. S. S. SATELLITE, *August 26, 1862.*

SIR: In obedience to the order of Commodore Charles Wilkes I have the honor to report the steamer *Satellite* at anchor off Aquia Creek.

I have the honor to be, sir, very respectfully, your obedient servant,

AMOS P. FOSTER,
Commanding Satellite.

Hon. GIDEON WELLES.
Secretary of the Navy, Washington, D. C.

[Telegram.]

FALMOUTH, VA., *August 27 [1862].—6:30 p. m.*
(Received at Washington, D. C., 7 p. m.)

The gunboats that you promised me have not been sent to Aquia Creek; there should be at least six sent there at once.

A. E. BURNSIDE,
Major-General, Commanding.

SECRETARY OF THE NAVY.

Report of Lieutenant Morris, U. S. Navy, commanding U. S. S. Port Royal, of arrival at Aquia Creek.

U. S. GUNBOAT PORT ROYAL,
Aquia Creek, August 27, 1862.

SIR: I have the honor to report the arrival of this steamer at this place, in obedience to orders received from Commodore Wilkes.

Very respectfully, your obedient servant,

GEO. U. MORRIS,
Lieutenant, Commanding, U. S. Navy.

Hon. GIDEON WELLES,
Secretary of the Navy, Washington, D. C.

Report of Lieutenant Quackenbush, U. S. Navy, commanding U. S. S. Delaware, of arrival at Aquia Creek.

U. S. S. DELAWARE,
Aquia Creek, August 27, 1862.

SIR: In obedience to the order of Commodore Charles Wilkes, dated August 25, I have the honor to report my arrival at Aquia Creek.

Very respectfully, your obedient servant,

S. P. QUACKENBUSH,
Lieutenant, Commanding.

Hon. GIDEON WELLES,
Secretary of the Navy, Washington, D. C.

Report of Acting Master Shankland, U. S. Navy, commanding U. S. S. Currituck, of arrival at Aquia Creek.

AQUIA CREEK, *August 27, 1862.*

SIR: I respectfully report the arrival at this place of the U. S. gunboat *Currituck* to the Department, as per orders received from Commodore Charles Wilkes, commanding James River Flotilla.

Very respectfully, your obedient servant,

WM. F. SHANKLAND,
Acting Master, Commanding.

Hon. GIDEON WELLES,
Secretary of the Navy.

Report of Acting Master Hamilton, U. S. Navy, commanding U. S. S. Cœur de Lion, of arrival at Aquia Creek.

U. S. S. CŒUR DE LION,
Aquia Creek, August 28, 1862.

SIR: I most respectfully report that, in accordance with the orders of Commodore Charles Wilkes, commanding James River Flotilla, I have arrived at this station with my vessel, and am ready for such duty as you may assign me.

Very respectfully,

ALEX. HAMILTON,
Acting Master, Commanding.

Hon. GIDEON WELLES,
Secretary of the Navy, Washington, D. C.

[Telegram.]

FALMOUTH [VA.], *August 29 [1862]—1 p. m.*

The gunboats at Aquia Creek are about leaving for want of orders to remain.

They should remain to protect the depot of supplies, and in fact there should be more of them.

A. E. BURNSIDE,
Major-General.

G. V. FOX,
Assistant Secretary Navy.

[Telegram.]

NAVY DEPARTMENT,
August 29, 1862.

Retain all the vessels sent from James River at Aquia Creek until further orders, but act in conjunction with General Burnside, to whom you will communicate at Falmouth, Va.

GIDEON WELLES,
Secretary of the Navy.

SENIOR NAVAL OFFICER,
Off Aquia Creek.

[Telegram.]

AQUIA, *August 29, 1862—3:40 p. m.*
(Received at Washington 3:50 p. m.)

SIR: I have received your telegram and will act in accordance with the same. I have sent Lieutenant-Commander G. U. Morris to Falmouth to communicate with Major-General Burnside.

Very respectfully,

S. P. QUACKENBUSH,
Lieutenant-Commander.

Hon. GIDEON WELLES,
Secretary of the Navy.

[Telegram.]

NAVY DEPARTMENT, *August 29, 1862.*

Turn over the command of the James River Flotilla to Rear-Admiral L. M. Goldsborough and proceed without delay to Washington with the *Wachusett*, *Maratanza*, *Sonoma*, *Tioga*, *Aroostook*, and six mortar boats and assume command of the Potomac Flotilla. Send the other six mortar boats to Baltimore. Let the mortar boats come up under sail. Acknowledge receipt.

GIDEON WELLES,
Secretary of the Navy.

Commodore CHARLES WILKES,
Commanding James River Flotilla, Hampton Roads, Va.

[Telegram.]

NAVY DEPARTMENT, *August 29, 1862.*

I have sent an order to Aquia Creek to detain the boats. Wilkes is ordered up the Potomac with a dozen vessels, and will assume command.

G. V. FOX.

Brigadier-General A. E. BURNSIDE,
Falmouth, Va.

Report of Acting Master Provost, U. S. Navy, commanding U. S. S. Anacostia, of expedition down the Rappahannock River.

U. S. S. ANACOSTIA,
Off Fredericksburg, Va., August 29, 1862.

SIR: Having been requested by Major-General Burnside, I proceeded down the river in steamer *Cooper's Point* with a section of Sixteenth New York Artillery, Captain [Milo W.] Locke, and twenty sharpshooters of the Fourth Rhode Island, as far as Port Royal [Va.], breaking up several boats, and then at Port Royal Ferry. At 1 at night I arrested six persons, proving to be lieutenants, privates, and recruits for the Southern Army, upon which no papers of any importance were found. One had trunk filled with smoking pipes, combs, and some jewelry (bogus); capturing one horse and carriage belonging to one Captain Gibbs, recruiting for Southern Army at Port Royal, he having swum his horse across, boating himself and wagon, also he crossing and recrossing daily, joining his carriage on the opposite side, and proceeding toward the Potomac in order to meet parties—officers, lieutenants, and privates for the rebel Army—and assisting same in transporting goods. The following parties were taken prisoners:

Francis J. Reilly, jr., second lieutenant, Company G, Thirteenth Virginia.

T. R. Todd, Company E, First Maryland.

Daniel Bile, Company E, First Maryland.

B. M. Riley, recruit.

E. Clark, recruit.

J. Stockdale, recruit.

Upon James Stockdale was found a certificate of enrollment within our Army. The prisoners were delivered up to General Burnside, and I hope this will meet your approval.

Very respectfully, your obedient servant,

NELSON PROVOST,
Acting Master, Commanding.

Lieutenant-Commander SAMUEL MAGAW,
Commanding Potomac Flotilla.

Letter from the mayor of Alexandria, Va., to the Secretary of the Navy, urging the presence of armed vessels off Aquia Creek.

ALEXANDRIA, *August 29, 1862.*

DEAR SIR: In view of what has occurred, I would most respectfully suggest the importance of guarding the Potomac River by armed steamboats, particularly at the mouth of the river and at Aquia Creek.

Nothing seems to be too bold for the rebels to attempt, and the burning of the wharf and trestlework at the creek and the capture and destruction of the cars would be a serious affair. The rebel troops have recently been at Occoquan, and a raid from that point upon Aquia would be very easy. Secessionists here are looking for something of the kind, having actually put out the report of it to-day. It may be only a brief anticipation.

I think a stationary boat here would be of service.

Very respectfully,

LEWIS MCKENZIE,
Mayor.

Hon. GIDEON WELLES,
Secretary of the Navy.

A single gun fired from the shores of the Potomac on vessels would at once prevent vessels coming here with supplies and would be a serious loss to the Government. I think the timber on the river ought to be cut down at all dangerous points; it could be done fore and aft of the river, without much difficulty, on the Virginia side.

Order of commandant navy yard, Washington, to Lieutenant-Commander Magaw, U. S. Navy, senior officer Potomac Flotilla, transmitting general order regarding articles on captured vessels.

COMMANDANT'S OFFICE, NAVY YARD,
Washington, August 30, 1862.

SIR: I enclose herewith a general order, of this date, relative to the securing of articles on board of captured vessels, which you will please communicate to all the vessels under your command.

Very respectfully, your obedient servant,

ANDW. A. HARWOOD,
Commodore and Commandant.

Lieutenant SAML. MAGAW,
Potomac Flotilla.

[Enclosure.]

GENERAL ORDER.] NAVY YARD, WASHINGTON,
August 30, 1862.

Hereafter, all officers capturing vessels on the Potomac are required to see that all articles of merchandise or cargo are placed securely under lock and seal, and all small articles of value collected together and secured. All papers, of whatever description, to be carefully collected and sealed by the officer making the capture in person, in order that all those articles may be ready for immediate delivery on the arrival of such prize at this yard.

ANDREW A. HARWOOD,
Commandant.

[Telegram.]

FORTRESS MONROE, *August 30, 1862.*
(Received at Washington, D. C., 5:10 p. m.)

Your second dispatch has been received. The vessels are coaling, and will leave as soon as possible. It is blowing half a gale of wind,

which retards us considerably. The mortar schooners will get under way as soon as it lulls and the tide moves them. All will be off by to-morrow.

Respectfully,

CHARLES WILKES.

Hon. GIDEON WELLES,
Secretary of Navy.

Report of Lieutenant-Commander Quackenbush, U. S. Navy, senior officer Potomac Flotilla, regarding vessels off Aquia Creek.

U. S. S. DELAWARE,
Aquia Creek, Potomac River, August 30, 1862.

SIR: I respectfully request you will give the necessary orders for furnishing coal to this flotilla.

The following vessels are now stationed off Aquia Creek: *Delaware, Port Royal, Currituck, Satellite* and *Cœur de Lion.* The latter vessel is leaking badly, and will probably have to be taken on the ways shortly for repairs.

Very respectfully, your obedient servant,

S. P. QUACKENBUSH,
Lieutenant-Commander and Senior Officer.

Hon. GIDEON WELLES,
Secretary of the Navy.

[Telegram.]

NAVY DEPARTMENT, *August 30, 1862.*

You can bring with you the *Jacob Bell, Yankee,* and the tug *Alert.*

GIDEON WELLES.

Commodore CHAS. WILKES, U. S. Navy.
Old Point Comfort, Va.

[Telegram.]

FORT MONROE, *August 31.*
(Received at Washington, 4:15 p. m.)

SIR: The vessels under my command leave within an hour to 10 o'clock, 31st August.

CHARLES WILKES,
Commanding.

Hon. GIDEON WELLES,
Secretary of Navy.

[Telegram.]

NAVY DEPARTMENT, *September 1, 1862.*

Consult with Major-General Burnside and leave sufficient force to protect his movement. It is reported that the *Anacostia* is ashore in the Rappahannock. Send one light-draft vessel in to her relief. Two have gone from the yard.

GIDEON WELLES.

Commodore CHAS. WILKES,
Commanding Potomac Flotilla, off Aquia Creek.
(Care Major-General A. E. Burnside.)

Order of the Secretary of the Navy to Lieutenant-Commander Whiting, U. S. Navy, commanding U. S. S. Wyandotte, to report for duty in Potomac Flotilla.

NAVY DEPARTMENT, *September 1, 1862.*

SIR: Proceed to the Potomac River with the U. S. S. *Wyandotte*, and, upon falling in with Commodore Wilkes, you will report to that officer for duty in the flotilla under his command.

I am, respectfully, your obedient servant,

GIDEON WELLES.

Lieutenant-Commander W. D. WHITING,
Commanding U. S. S. Wyandotte, New York.

[Telegram.]

AQUIA CREEK, *September 1, 1862—6:40 a. m.*
(Received at Washington 7:30 a. m.)

I ought to have more gunboats here. It is an absolute necessity. The *Anacostia* has been so notified and will be here in a day or two unless something happens.

A. E. BURNSIDE,
Major-General.

G. V. FOX,
Assistant Secretary Navy.

[Telegram.]

NAVY DEPARTMENT, *September 1, 1862.*

Commodore Wilkes left Hampton Roads yesterday with nine gunboats, and you had better intercept him when he passes to-day. He will no doubt leave part of his force with you at your request.

G. V. FOX.

Major-General A. E. BURNSIDE,
Aquia Creek, Va.

[Telegram.]

NAVY DEPARTMENT, *September 2, 1862.*

Turn over the vessels of the Potomac Flotilla, with all orders, instructions, and information, to Commodore Charles Wilkes, the commander of the James River Flotilla.

GIDEON WELLES.

Commodore A. A. HARWOOD,
Commandant Navy Yard, Washington.

Letter from commandant navy yard, Washington, to Commodore Wilkes, U. S. Navy, appointed to command Potomac Flotilla.

COMMANDANT'S OFFICE, NAVY YARD,
Washington, September 2, 1862.

SIR: By direction of the honorable Secretary of the Navy, I hereby turn over to you the vessels composing the Potomac Flotilla as follows:

Thomas Freeborn, Lieutenant-Commander Samuel Magaw, commanding.

Anacostia, Acting Master Nelson Provost, commanding.
Reliance, Acting Master F. Josselyn, commanding.
Resolute, Acting Master J. C. Tole, commanding.
Wyandank, Acting Master John McGowan, commanding.
Teaser, Acting Ensign Philip Sheridan, commanding.

Enclosed you will find copies of all orders, instructions, and information given to Lieutenant-Commander Magaw in regard to the duties of said vessels.

Very respectfully, your obedient servant,

ANDW. A. HARWOOD,
Commodore.

Commodore CHAS. WILKES,
Commander of the James River Flotilla.

[Telegram.]

NAVY YARD, [WASHINGTON, D. C.],
September 2 [1862],—2 a. m.
(Received 2 : 25 a. m.)

Your order directing four gunboats to be sent to Aquia Creek has been delivered to Captain Jenkins in person. Boats will leave at daylight.

A. A. HARWOOD.

Hon. G. WELLES.

Order of the Assistant Secretary of the Navy to Commodore Wilkes, U. S. Navy, Commanding Potomac Flotilla, regarding extent of command.

NAVY DEPARTMENT, *September 2, 1862.*

SIR: Your command will include the Rappahannock and Piankatank rivers, both of which, and the landings adjacent, you will effectually blockade.

I am, respectfully, your obedient servant,

G. V. FOX,
Assistant Secretary.

Commodore CHARLES WILKES,
Commanding Potomac Flotilla, Washington, D. C.

Report of Commodore Wilkes, U. S. Navy, commanding Potomac Flotilla, regarding location of U. S. steamers Jacob Bell and Wachusett.

U. S. S. WACHUSETT,
Off U. S. Arsenal, Potomac River, September 2, 1862.

SIR: I have the honor to inform the Department that I have dispatched the *Jacob Bell*, with orders to anchor near Georgetown, and to guard the Virginia approach to the aqueduct. The *Wachusett* will take position this evening in the Virginia channel of the Potomac, near the south end of the Long Bridge, and will effectually guard the approach thereto.

I am, very respectfully, your obedient servant,

CHARLES WILKES,
Commanding Potomac Flotilla.

Hon. GIDEON WELLES,
Secretary of the Navy, Washington.

Report of Acting Master Provost, U. S. Navy, commanding U. S. S. Anacostia, of the movement of that vessel down the Rappahannock River.

U. S. S. ANACOSTIA, *September 2, 1862.*

SIR: I left Fredericksburg, Va., on Sunday night, after the bridges being [were] blown up. At the request of General A. E. Burnside I left for the mouth of the Rappahannock River, breaking up all the boats I saw on my way down. About 20 miles from the mouth of the river the engine broke down, which report I enclose. Before I left Fredericksburg, set on fire a sloop; did not learn her name.

Respectfully, your obedient servant,

NELSON PROVOST,
Acting Master, Commanding.

Lieutenant-Commander SAMUEL MAGAW,
Commanding Potomac and Rappahannock Flotilla.

Weekly report of Lieutenant-Commander Magaw, U. S. Navy, commanding U. S. S. Thomas Freeborn, relative to affairs in the Potomac and Rappahannock rivers.

U. S. S. FREEBORN,
Potomac River, September 4, 1862.

SIR: I have the honor to submit my weekly report.

The crossing from Maryland to Virginia has almost entirely ceased. Although cruising at night in boats, we have not succeeded in catching any parties.

I have received your two general orders in relation to prizes and your letter marked confidential. Smith's Creek has been carefully watched. I received a note from Lieutenant-Commander de Krafft conveying an order from you in relation to the *Anacostia*, etc. I convoyed her from the Rappahannock to the Potomac, and send her to the yard. Her engine needs much overhauling. I enclose the report of her senior engineer; also a report of Acting Master Provost, commanding the *Anacostia*.

The Rappahannock River is being blockaded by the *Resolute*, with orders not to leave the mouth. I presume it was not your intention to leave the entrance unguarded. The *Freeborn* has been cruising from Aquia Creek to Point Lookout. The *Wyandank* is at Piney Point, supplying stores, etc. The *Reliance* [is] also in the Potomac. One of the coal schooners sent to the mouth of the Rappahannock will be discharged to-day. I propose to hire a portion of the wharf at Piney Point for a coal depot. The demurrage of the two coal schooners amounts to about $16 per day, and I think the Piney Point wharf or that of Plowdens (on the Wicomico) [Md.], can be contracted for at $3. Will you authorize it?

Master's Mate J. J. Brice has been under my command for about a year. I cheerfully recommend him and ask your influence that he be made an acting ensign and placed in command of the *Eureka*.

Since the death of Mr. John Johnson, second assistant engineer of this vessel, in May last, I have had but two third assistants, Mr. William P. Magaw being the senior. His duties have been performed to my entire satisfaction, and I beg you will have him made a second assistant or have an officer of that grade sent to me. I received a verbal order from Commodore Wilkes to act under my present instructions until further orders. I enclose some requisitions and a letter

from a lady in Westmoreland County, Va., in relation to her negroes. I have not seen or heard of them. Some parties from the transports *Telegraph* and *Rotary* have landed in Lancaster County (Rappahannock) and committed depredations, of which the flotilla got the credit, as well as that of negro stealing. Everything was quiet on the lower Rappahannock yesterday. Some few of the enemy's scouts had been seen. Some barges loaded with army stores were wrecked in the recent gale near the mouth of the Rappahannock. The inhabitants plundered two of them, and the others, four in number, are bilged, but under charge of the *Resolute*, the quartermaster's agent in charge promising to send a wrecking party at once. From the two that were plundered nine men were taken, and I suppose sent to Richmond.

Acting Master John Kellogg, recently returned from sick leave, is senior to Mr. Plunkett, who is a much younger and more active officer, and I don't wish him superseded. If Mr. Kellogg can be detached, and you will send me two master's mates, I will be obliged. I have but two, and they have a watch to keep and boat duty also.

Very respectfully, your servant,

SAMUEL MAGAW,
Lieutenant-Commander.

Commodore A. A. HARWOOD,
Commanding Navy Yard, Washington, D. C.

General instructions of Commodore Wilkes, U. S. Navy, commanding Potomac Flotilla.

U. S. S. WACHUSETT, *September 5, 1862.*

First. All vessels, steamers, boats, and transports are to be overhauled. If they have no passes they will be detained and reported. The passes will be signed by the commanding officer of flotilla.

Second. All boats or canoes of no value will be destroyed; but if of value, to be detained for tow to Washington. The papers (registers, etc.) will be evidence respecting their characters, and will be carefully sealed and transmitted to the flagship.

Third. All passengers are to be retained and sent up to the flagship.

Fourth. No communication of any kind is to be permitted between the shore of the rivers or bays.

Fifth. As many boats are to be fitted to cruise during the night as can be spared from the vessels. The crews who have been in the boats at night will be permitted to take their hammocks for certain hours during the day.

Sixth. The communication along the river will be maintained through the vessels on the different stations by passing dispatches, reports, mails, etc., from one station to another, and so on up to the flagship. The lower station will leave at 8 a. m. One hour and thirty minutes is allowed for the transmission through the limits of each station. Reports to be made daily. In case of necessity, reports will be sent immediately by the same mode of transmission. This plan is resorted to to prevent any vessel from going beyond the limits of her station.

Seventh. Signals (boat code) will be repeated through the several stations, with the smokestack number of the vessel where it originates. This will take place as often as requisite to give information.

CHARLES WILKES,
Commanding Potomac Flotilla.

Report of Lieutenant-Commander Magaw, U. S. Navy, commanding U. S. S. Thomas Freeborn, relative to the capture of a small schooner.

Semiofficial.] U. S. S. FREEBORN, *September 5, 1862—p. m.*

SIR: I respectfully enclose a report* of Acting Master Josselyn, commanding the *Reliance*, of the capture of a small schooner this morning at Currioman.

The parties in her, with the exception of one man, escaped.

* * * * * * *

I have the honor to be, etc.,

SAMUEL MAGAW,
Lieutenant-Commander.

Commodore A. A. HARWOOD,
Commanding Navy Yard.

Report of Lieutenant-Commander Magaw, U. S. Navy, commanding U. S. S. Thomas Freebarn, regarding seizures.

U. S. S. FREEBORN, *September 6, 1862.*

SIR: I have the honor to enclose the report* of Acting Master McGowan in relation to some seizures made by the officers and crew of the *Wyandank;* also a report of an examination held on the boiler and engine of the *Reliance.* I shall be obliged to send her to the yard in a few days for repairs. I have detained the *Anacostia* at Piney Point, her accounts having just been transferred to Paymaster Cosby, and some of her crew are to be paid off.

This morning before day I seized a large white canoe entering Smith's Creek and answering your description in your letter (marked confidential) of the 26th. Two men, Thomas Richardson and William Allen, were in her. I have detained them until I can further investigate the matter. They state they were oystering, which is improbable, from the fact that they were without tongs. I think the canoe was on her return from a trip to Virginia. I am informed that Mr. Richard Colton (whose son I reported to you as having gone into Virginia) will soon make a trip to Baltimore for the purpose of purchasing arms, etc., to send to Virginia. Mr. Colton was lately appointed enrolling officer of his district, but declined serving. The inhabitants of this (St. Mary's) county are very bitter and exulting over what they call our late reverses. You will see in Mr. McGowan's report that one of his boats was fired on last night from the Maryland shore. I would recommend a land force, say two companies, to cooperate with the steamers. I have sent word to certain parties that I would hold their farms responsible if any of my officers or men were killed or wounded by shots fired therefrom.

I regret to say that Third Assistant Engineer McLane, of the *Wyandank*, was accidentally wounded by discharge of his pistol. He was sent on board the *Corwin*, where he had immediate medical attendance. It was carelessness on his part. If the surgeons report it necessary I will send him to the hospital. I will send by the *Anacostia* a small schooner and all contraband articles captured, as also the prisoners, with statements, agreeably to your late general orders. I take the liberty of sending you a small Virginia Commonwealth note of the new issue; it is the first I have seen.

---

* Not found.

The *Reliance* has some dozen Enfield rifles, obtained from the wrecks of the two barges plundered by the inhabitants of Mathews County, Va. I have directed her to turn them over to the ordnance department at the yard. They belong to the Army.

I am, very respectfully, your obedient servant,

SAMUEL MAGAW,
Lieutenant-Commander.

Commodore A. A. HARWOOD, U. S. Navy,
Commanding Navy Yard, Washington, D. C.

[Telegram.]

WASHINGTON NAVY YARD,
September 9, 1862—10: 40 a. m.

* * * * * * *

An important check to the trade across the river has been given. We have prisoners, merchandise, and papers, showing who the furnishers of goods are.

I am waiting for Commodore Wilkes to act, as my command has been turned over to him.

A. A. HARWOOD,
Commandant Navy Yard.

Hon. G. V. FOX,
Assistant Secretary Navy.

Report of Commodore Wilkes, U. S. Navy, commanding Potomac Flotilla, regarding the forwarding of persons and papers captured by the U. S. S. Wyandank.

U. S. S. WACHUSETT,
Navy Yard, Washington, September 9, 1862.

SIR: I have the honor to enclose sundry papers* taken possession of by the officer in charge of the launch of the *Wyandank;* and also to inform the Department that I have turned over to Commodore Harwood the following-named persons, who were captured by the launch of the *Wyandank:*

Dr. William Wirt (white), William Hammond (yellow), John Locust (yellow), William Hammond (yellow), Edward Mahoney (black), Charles L. Cook (white), William Rich (black), John Hungerford (black), Robert Rich (black), Bushrod E. Courtney (white).

I am, very respectfully, your obedient servant,

CHARLES WILKES,
Commanding Potomac Flotilla.

Hon. GIDEON WELLES,
Secretary of the Navy, Washington.

---

* Unimportant.

Order of the Secretary of the Navy to Commodore Wilkes, U. S. Navy, to transfer the command of Potomac Flotilla to Commodore Harwood, U. S. Navy.

NAVY DEPARTMENT, *September 9, 1862.*

SIR: You will turn over the command of the Potomac Flotilla to Commodore Harwood, and furnish him with a list of the vessels, their disposition, and orders.

I am, respectfully, your obedient servant,

GIDEON WELLES.

Commodore CHARLES WILKES, U. S. Navy,
Washington, D. C.

Order of the Secretary of the Navy to commandant navy yard, Washington, regarding U. S. schooner Bailey.

NAVY DEPARTMENT, *September 9, 1862.*

SIR: You will please send the schooner *Bailey* to the Philadelphia navy yard, there to be laid up, subject to the order of the Coast Survey.

I am, respectfully, your obedient servant,

GIDEON WELLES,
Secretary of the Navy.

Commodore A. A. HARWOOD,
Commandant Navy Yard, Washington, D. C.

Order of the Secretary of the Navy to Commodore Harwood, U. S. Navy, to assume command of the Potomac Flotilla, and transmitting letter from the mayor of Alexandria regarding the removal of trees from the Virginia shore.

NAVY DEPARTMENT, *September 9, 1862.*

SIR: Enclosed herewith please find copy of a letter, dated the 6th instant, from L. McKenzie, esq., mayor of Alexandria, Va., who can furnish 700 or 800 contrabands. The suggestions therein contained are worthy of your attention. Commodore Wilkes having been ordered to sea, you will for the present direct the movements of the Potomac Flotilla.

Very respectfully, your obedient servant,

GIDEON WELLES,
Secretary of the Navy.

Commodore A. A. HARWOOD,
Commanding Potomac Flotilla,
Navy Yard, Washington, D. C.

[Enclosure.]

MAYOR'S OFFICE,
Alexandria, Va., September 6, 1862.

DEAR SIR: I would beg leave most respectfully to suggest that, in view of the fact of the probable occupancy of Manassas and the accumulating again of Confederate troops on the Potomac at no very distant period to prevent vessels coming up the Potomac, a sufficient force of contrabands under cover of the gunboats be sent down to cut

down the trees on the shores of Virginia sufficiently far back to prevent the building of batteries or the planting of fieldpieces to fire on vessels. Unless this is done we may look for a repetition of the same kind of annoyances our vessels met with, which so largely increased the expenses of transportation for the Army. The first gun fired increases the rates 50 per cent.

Your obedient servant,

LEWIS MCKENZIE,
Mayor.

Hon. GIDEON WELLES,
Secretary of the Navy.

Report of Commodore Harwood, U. S. Navy, commanding Potomac Flotilla, regarding captures made by U. S. S. Delaware.

COMMANDANT'S OFFICE, NAVY YARD,
Washington, September 10, 1862.

SIR: The *Reliance* arrived at the yard this morning with six prisoners and a quantity of dry goods, taken by the *Delaware.*

The prisoners have been sent to the provost-marshal, and the goods will be delivered to the prize court as soon as they are landed. The following is a list of the prisoners, viz:

Hiram Hardwick, of Hague, Va.
John Hanson, of Fluvanna, Va.
Joseph Newman, of Warsaw, Va.
Charles Johnson (colored), of Hague, Va.
Eli Bandy (colored), of Mattox, Va.
Also Richard W. Jenkins, of Currioman, Va., captured by the *Reliance.*

I have the honor to be, with great respect, your obedient servant,

ANDREW A. HARWOOD,
Commodore.

Hon. GIDEON WELLES,
Secretary of the Navy.

Report of Commodore Harwood, U. S. Navy, commanding Potomac Flotilla, of the receipt of letter from the mayor of Alexandria, Va.

COMMANDANT'S OFFICE, NAVY YARD,
Washington, September 10, 1862.

SIR: I have received your letter of yesterday instructing me to direct, for the present, the movements of the Potomac Flotilla, and enclosing a copy of a letter from the mayor of Alexandria.

I will confer with the mayor to-day for the purpose of ascertaining his views definitely, and of rendering him such assistance as the service may demand.

I have the honor to be, with great respect, your obedient servant,

ANDW. A. HARWOOD,
Commodore.

Hon. GIDEON WELLES,
Secretary of the Navy.

Letter from Commodore Wilkes, U. S. Navy, late commanding Potomac Flotilla, to Commodore Harwood, U. S. Navy, transferring that command to him.

U. S. S. WACHUSETT, *September 10, 1862.*

SIR: I herewith enclose* a list of the vessels of the Potomac Flotilla and their stations, which, by order of the Navy Department, I turn over to your command. I also forward to you a chart of the Potomac, with stations marked; also sundry requisitions, approved and not approved, and other papers relating to the squadron, and two books of blank passes.

I am, very respectfully, your obedient servant,

CHARLES WILKES,
Commanding Potomac Flotilla.

Commodore A. A. HARWOOD,
Commanding Navy Yard, Washington, D. C.

Report of Commodore Harwood, U. S. Navy, commanding Potomac Flotilla, seeking Department's instructions.

COMMANDANT'S OFFICE, NAVY YARD,
Washington, September 11, 1862.

SIR: In Lieutenant-Commander Magaw's weekly report, dated *Freeborn*, September 4, he proposes to hire a portion of the wharf at Piney Point for a coal depot.

He remarks that the demurrage of the two coal schooners amounts to about $16 a day, and that he thinks the wharf in question or that of Plowden's, on the Wicomico [Md.], can be contracted for at the rate of $3 a day.

Will you please inform me whether in this and in like circumstances involving economy I may use my discretion?

I have the honor to be, with great respect, your obedient servant,

ANDW. A. HARWOOD,
Commodore, Commanding Flotilla.

Hon. GIDEON WELLES,
Secretary of the Navy.

Report of Lieutenant-Commander Magaw, U. S. Navy, commanding U. S. S. Thomas Freeborn, of arrival in the Potomac from the Rappahannock River.

U. S. S. FREEBORN,
Off Smith's Point, September 15, 1862.

SIR: I respectfully report that I came from the Rappahannock last night to Point Lookout for water, succeding, however, in getting about a day's alowance.

Nothing has occurred since my letter of yesterday.

Several shells were fired this morning in the vicinity of Coan River, supposed to be from one of the mortar boats.

I have the honor to be, your obedient servant,

SAMUEL MAGAW,
Lieutenant-Commander.

Commodore A. A. HARWOOD, U. S. Navy,
Commanding Potomac Flotilla.

---

* Not found.

Report of Commodore Harwood, U. S. Navy, commanding Potomac Flotilla, regarding capture of suspicious persons.

COMMANDANT'S OFFICE, NAVY YARD,
Washington, September 15, 1862.

SIR: I have to report that I brought up with me in the *Ella* the following persons:

Refugees.—Dr. William H. Chalmers, John Whitman, John Simpson, Scott Gisby, A. B. Hutchings.

Lieutenant-Commander McCrea, of the *Jacob Bell*, referring to these persons, writes:

> They represent themselves as Union men and as having been unable to leave Richmond ere this. They have been there eighteen months.
>
> I can not vouch for their assertion being true or false. They say they belong to New York. I trust no one.

These persons were sent on my arrival to the provost-marshal, with a statement of their cases.

Prisoners.—William Allen and Thomas Richardson, captured in the Potomac River off Smith's Creek, St. Mary's County, Md., in the large white canoe, identified as the one known to have been used for some time in transporting passengers and merchandise from Maryland to Virginia.

These men, when questioned, said they were oystering; but had no implements on board for the purpose.

Lieutenant-Commander Magaw, on examining a list of names of Virginians engaged in illegal traffic, which list was given by a loyal citizen previous to the capture, found the names of William Allen and Thomas Richardson noted as having transported ammunition and recruits for the enemy.

I have made this statement to the provost-marshal, and I hope these men may not be set free. I have reason to believe that they are very unscrupulous in taking and breaking the oath of allegiance to the United States.

I have the honor to be, with great respect, your obedient servant,

ANDW. A. HARWOOD,
Commodore, Commanding Flotilla, Potomac River.

Hon. GIDEON WELLES,
Secretary of the Navy.

Report of Lieutenant-Commander Magaw, U. S. Navy, commanding U. S. S. Thomas Freeborn, regarding the burning of schooner Arctic.

U. S. S. FREEBORN,
Mouth of Rappahannock, September 15, 1862.

SIR: I respectfully report having burned one of the schooners I spoke to you of, in the Great Wicomico, named the *Arctic*. The others were worthless.

There are two companies of the enemy between Great Wicomico and the head of Coan River. Some of them were seen by our launch this morning, apparently making an attempt to reach a point near which she would have to pass, but nothing more was seen of them, as they had to pass through some woodland.

I came into this river this afternoon; no sign of the enemy here. The *Resolute* has arrived.

I have the honor to be, your servant,

SAMUEL MAGAW,
Lieutenant-Commander.

Commodore ANDREW A. HARWOOD,
Commanding Potomac Flotilla, etc.

Letter from the Secretary of the Navy to Commodore Harwood, U. S. Navy, commanding Potomac Flotilla, transmitting information regarding breach of blockade between Maryland and Virginia.

NAVY DEPARTMENT,
September 15, 1862.

SIR: I herewith enclose a copy of a letter from Stephen Shinn, esq., of Alexandria, dated 7th instant, in reference to communication between the Maryland and Virginia shores.

I am, respectfully, your obedient servant,

GIDEON WELLES,
Secretary of the Navy.

Commodore A. A. HARWOOD,
Commandant Navy Yard, Washington, D. C.

[Enclosure.]

ALEXANDRIA,
September 7, 1862.

SIR: I am credibly informed that there is a small schooner-rigged boat regularly plying between Port Tobacco, Md., and Upper Machodoc Creek, Va., carrying mails and passengers. This boat was built and owned by H. R. Bradshaw, of this city; is a flat, with a centerboard, and is singularly rigged with quite a short foremast, and is well calculated for such business. I do not know that Bradshaw is with the boat, but he is absent from here and is quite a shrewd fellow, and would readily engage in such business for money. I am further informed there is a small, white-painted sloop engaged in the same business from Cobb's Point, Md., to the Virginia shore.

These fellows are too sharp to be caught by the gunboats or revenue cutters, as they know them all and keep out of their way. There is a Captain John Bristow in the propeller *Downing*, who knows them and tells me that he could capture them if authorized to do so. This propeller is already in the employ of the Government.

I have communicated with General Wadsworth to-day on the subject, as he recently informed me he had sent some cavalry down into that country.

Very respectfully, your obedient servant,

STEPHEN SHINN.

Hon. GIDEON WELLES,
Secretary of the Navy, Washington.

Order of the Secretary of the Navy to Commodore Harwood, U. S. Navy, commanding Potomac Flotilla, regarding wharfage.

NAVY DEPARTMENT, *September 16, 1862.*

SIR: Your letter* of the 11th instant has been received. You are authorized to use your discretion in the matter of hiring a wharf or wharves for the vessels of the flotilla on the Potomac.

I am, respectfully, your obedient servant,

GIDEON WELLES,
Secretary of the Navy.

Commodore A. A. HARWOOD,
Commandant Navy Yard, Washington, D. C.

Report of Acting Master Ives, U. S. Navy, commanding U. S. S. Yankee, of the arrest of Dr. Lomax and Mr. Pye.

U. S. S. YANKEE, *September 16, 1862.*

SIR: I beg respectfully to report that yesterday afternoon at about 4 p. m. a deserter, calling himself Perry Seymour, came on board and requested protection. He says that he left Richmond about three weeks ago and only arrived day before yesterday at the Potomac River.

Dr. Lomax and Mr. Pye were arrested last evening by the guard boat from this vessel at about 9 o'clock. They were in a small skiff, and they stated that they were only going to the Maryland shore to see Mr. Pye's father. There was no merchandise in the boat.

Very respectfully,

THOMAS POYNTON IVES,
Acting Master, Commanding.

Commodore HARWOOD,
Commanding Potomac Flotilla.

[Telegram.]

NAVY YARD, WASHINGTON, *September 17, 1862—3 p. m.*

Dr. Lomax and Mr. Pye, who were arrested by the *Yankee's* boats on the Potomac, have been released by the military authorities and ask for a passage back again. I think it may be safely granted.

Shall I grant it?

A. A. HARWOOD.

SECRETARY OF THE NAVY.

Report of Acting Master Rogers, U. S. Navy, commanding U. S. schooner William Bacon, regarding examination of schooner George H. Berry.

U. S. SCHOONER WILLIAM BACON,
Off Kettle Bottom Shoals, Potomac River, September 17, 1862.

SIR: Having been a week to-day on this station, and not having seen Lieutenant-Commander Franklin, or any senior officer, to report

---

* See p. 84.

to or receive instructions from, I may be doing unwittingly what is not right. However, I will strive to do what is right to the best of my ability. If I err I hope you will overlook it. I should be very glad to get some instructions in regard to several matters.

On Monday, the 15th, I saw a small schooner close in with the land above Monroe's Creek, on the Virginia shore. We lay at the time off Mattox Creek. I had some suspicion and immediately got underway and ran up toward him [and] boarded him.

I found on the return of my officer with the captain and his papers that it was the schooner *George H. Berry*, $31\frac{88}{95}$ tons register, George N. West, master, under an enrollment and coasting license granted at the port of Accomac Court-House, on the 25th day of June, 1862, signed by H. P. Parker, surveyor of said port, and taken out for the term of one year. Things appearing all right and his papers granted in pursuance of and according to the rules of the act of Congress of the United States of America, I endorsed his papers, gave him permission to proceed up river, he being bound to Washington. He had in some little produce and 600 or 700 bushels of oats in bulk. The wind had fallen calm through the night, and the ebb tide obliged him to anchor in the position I found him. I have seen by accident in a newspaper that all vessels trading or coasting on the Potomac River are obliged to have a permit from the commander of the Potomac Flotilla. The *George H. Berry* had none, but I did not see this until after. I would be obliged to you if you would arrange so that [I] can gain some information in regard to such matters, and also what I shall do with contrabands. Three came off on board of this vessel on the 15th. They knew nothing of the schooner I have spoken of, but they say that their master, Mr. Spearman, and others, are concerned in a pungy or small vessel that is coming into Mattox Creek. I am on the lookout, and lay off the mouth of the creek. Please inform me what I shall do with contrabands. Mr. Lane grows no better, and has either chills or fever every day and is growing weak, and I think I ought to order him to report to you, and will venture to do so the first opportunity that offers, hoping that there is nothing wrong in so doing.

Your obedient servant,

WM. P. ROGERS,
Acting Master, Commanding U. S. Schooner William Bacon.

Commodore ANDREW A. HARWOOD,
Commanding Potomac Flotilla.

Report of Acting Master Phinney, U. S. Navy, Commanding U. S. schooner Racer, of capture of two men while crossing Potomac River.

U. S. SCHOONER RACER,
Off Aquia Creek, September 17, 1862.

SIR: I send you in arrest, under the following circumstances, two men calling themselves William L. Taylor and ——— Lewis:

Having observed boats under suspicious circumstances on the Maryland shore, I have kept a bright lookout for them in the daytime, suspecting that they would endeavor to pass goods over the river. On visiting the shore, I ascertained from negroes that goods were being carried over at night when opportunity occurred. Since then I have had my boats at night constantly engaged on guard duty, sending parties on shore to scout the country, and made arrangements to seize the

next arrival of goods that should appear. Last night the leather trunk, marked "R. H. Posey," which I send you, was found in the woods, partially concealed, by my scouting party, with the contents as enclosed; nothing of any apparent value. This morning the two men now sent you were observed crossing in a small skiff. My boat immediately put off to intercept them, and compelling their return, took them under arrest on the bank of the river. I had previously taken possession of a boat found near where these men were arrested, which, on seeing, they confessed was their own.

I send these men, the trunk, and the boat, that you may dispose of them as you may see fit.

I am, sir, very respectfully, your obedient servant,

ALVIN PHINNEY,
Acting Master, Commanding.

Commodore HARWOOD,
Commanding U. S. Navy Yard, Washington.

Report of Acting Master Street, U. S. Navy, temporarily commanding U. S. S. Jacob Bell, regarding the clearing of Mathias Point.

U. S. S. JACOB BELL,
Off Piney Point, September 17, 1862.

SIR: In regard to your communication of yesterday, on clearing Mathias Point, I would say that I do not think it can be done with the *Bell's* crew, as half of the men would have to remain on board to cover those on shore. I propose to have a steamer stationed (as per drawing*), one above, the other below, the point—one to cover the road above, the other to cover the cleared land below, to prevent the approach of the enemy.

It will require some time, and to do the work effectually it will require 75 contrabands (with axes for the same), 5 bales of oakum, 2 barrels tar, and 15 gallons turpentine.

I am, sir, ready at any time, when ordered, to undertake the expedition.

I have the honor to be, your obedient servant,

W. T. STREET,
Acting Master, Commanding.

Lieutenant-Commander E. P. MCCREA,
Adjutant Potomac Flotilla.

Report of Lieutenant-Commander McCrea, U. S. Navy, commanding U. S. S. Jacob Bell, regarding suppression of traffic between Maryland and Virginia and destruction of works on Mathias Point, Va.

U. S. S. JACOB BELL,
Off Piney Point, September 18, 1862.

SIR: I arrived this morning at 11 a. m., and respectfully submit the following report:

I find several refugees on St. George's Island, driven from Virginia, and who intend to live on the island. I have every reason to believe they are Union men and will engage in no trade contraband.

---

* Not found.

Lieutenant-Commander Magaw has been relieved by the *Currituck*; he proceeds to Washington to consult you. I enclose you a report of the *Jacob Bell* in my absence; also report of Acting [Volunteer] Lieutenant Hays, of the *Satellite*, the duplicate lists, etc. The works on Mathias Point will take about three days and require the enclosed.

Very respectfully, your obedient servant,

E. P. McCREA,
Lieutenant-Commander and Adjutant.

Commodore A. A. HARWOOD,
Commanding Potomac Flotilla.

[Enclosures.]

U. S. S. JACOB BELL,
Potomac Flotilla, off Piney Point, September 17, 1862.

SIR: Since you left I have been actively engaged in preventing traffic from Maryland to Virginia. Saturday night I sent the cutter, under the charge of Acting Ensign George E. McConnell, to reconnoiter St. George's Island. He found a large number of refugees upon the island that had escaped from Virginia. Thinking it advisable to make a reconnoissance up the creeks and inlets, both on the Maryland and Virginia shores, I accordingly got underway on Sunday morning and stood over to Virginia, below Ragged Point, and sent the cutter with six men, under the command of McConnell, up Jackson's Creek, with instructions to tow out any boats that might be made available for crossing the river. He proceeded up both Jackson's and Gainor's [Gardner's] creeks, but found nothing worth bringing off. Standing down the river I picked up a yawl boat with five men, four of them being furnished with passes from the Bremen consul at Richmond. Then I landed at Piney Point. I have the boat, but the men I paroled to go on the island.

Having obtained information that letters were sent from St. Inigoes post-office to Virginia, I went around to St Mary's River and anchored at Priests Point [Md.]. Together with Mr. Anderson I went to the post-office, but found no letters for Virginia, or any illegal transactions in the vicinity. I have had the vessels at this station busily employed from Ragged Point to the mouth of the river in looking after small boats or trading vessels.

I have painted the ship from stem to stern. Yesterday I picked up four contrabands who say they are from Virginia, but from appearances I take them to be from Maryland. Colonel Code came on board yesterday; two of his negroes ran off, and [he] visited me to look after them. I think these are his. Last night I sent a spy on St. George's Island dressed in rebel uniform, with very good success. Took him off this morning at 9 a. m., when I stood over for Virginia to Yeocomico River, taking a pilot with me. I have been up all the branches of the same, taken five prizes (small boats); was met by a party of cavalry; opened fire on them from the vessel and drove them off. The cutter received several shot. The gig was under the charge of Mr. McConnell, with Mr. Anderson as volunteer; the cutter under Mr. Hodson. They have also taken a seine 70 fathoms long. I have seven boats in all. What shall I do with them? I now have them hauled up at Piney Point.

In regard to the tug *Pacific*, she is lying here, totally unfit for use, her boilers being plugged in several places and liable to blow out at any time. I can make no use of her.

Your communications I received at 6:30 this evening, and send this off in haste.

I am, sir, your obedient servant,

WM. T. STREET,
Acting Master and Executive Officer.

Lieutenant-Commander E. P. MCCREA,
Adjutant Potomac Flotilla.

U. S. S. JACOB BELL, [*September 18, 1862.*]

SIR: Regarding the destruction of Mathias Point, it will take at least three days. I propose to station vessels as per drawing,* above and below the point to cover the road above, and the cleared land below, to prevent the approach of the enemy. It will require about 80 contrabands, 5 bales of oakum, 2 barrels of tar, 15 gallons of turpentine. Pickets will be thrown off from the gunboats, and a moderate shelling of the point before landing.

Very respectfully, your obedient servant,

E. P. MCCREA,
Lieutenant-Commander and Adjutant.

Commodore A. A. HARWOOD,
Commanding Potomac Flotilla.

U. S. S. SATELLITE,
Potomac Flotilla, September 15, 1862.

SIR: I beg leave to acknowledge the receipt of your order of the 10th, and, in compliance therewith, have reported to Commodore Harwood and taken command of the *Satellite* this day.

Very respectfully, your obedient servant,

PETER HAYS,
Volunteer Lieutenant, Commanding Steamer Satellite.

GIDEON WELLES,
Secretary of the Navy, Washington, D. C.

Order of Commodore Harwood, U. S. Navy, commanding Potomac Flotilla, to Acting Master Shankland, U. S. Navy, commanding U. S. S. Currituck, to assume command of Station 9, Potomac Flotilla.

U. S. S. JACOB BELL,
Potomac Flotilla, September 18, 1862.

SIR: You will take charge of Station 9, from Smith's Point to Rappahannock River. You can go up the latter-named river as far as you deem necessary for any purpose of advantage to the Government.

By order of the commodore:

Very respectfully, your obedient servant,

E. P. MCCREA,
Lieutenant-Commander and Adjutant Potomac Flotilla.

Acting Master W. F. SHANKLAND,
Commanding Currituck.

---

* Not found.

Instructions from Commodore Harwood, U. S. Navy, commanding Potomac Flotilla, to Lieutenant-Commander McCrea, U. S. Navy, commanding U. S. S. Jacob Bell, relative to Mathias Point expedition.

COMMANDANT'S OFFICE, NAVY YARD,
Washington, September 19, 1862.

SIR: I have given instructions to the master of the *Dragon* to report himself to you.

You will not detain him longer than is necessary for carrying out your instructions.

Report progress by the first opportunity.

I send copies of a general order in reference to enlistments which are to be distributed to the commanders of vessels of the Potomac Flotilla.

Are you in want of the combustible material which I intended you should have taken with you? I particularly desire that the work should be conducted with caution, but thoroughly.

The *Pacific* having been chartered by the Army and only temporarily attached to the Potomac Flotilla will be returned to the Army immediately.

Very respectfully, your obedient servant,

ANDW. A. HARWOOD,
Commodore, Commanding Potomac Flotilla.

Lieutenant-Commander MCCREA,
Adjutant Potomac Flotilla.

Report of Lieutenant-Commander McCrea, U. S. Navy, commanding U. S. S. Jacob Bell, regarding captures and the release of schooner Pilot.

U. S. S. JACOB BELL,
Potomac Flotilla, off Piney Point, September 19, 1862.

SIR: Your dispatch of to-day has this moment been received, and the general order regarding enlistments, which I will send out in the morning. Lieutenant-Commander Magaw left for Washington this morning. The *Delaware* left this afternoon to search for the vessel spoken of in Port Tobacco Bay [River]. I shall leave for Washington some time during the day, as soon as I receive answer to your considerations regarding the coal wharves.

I have a prisoner, 18 boxes of goods, 20 sacks of wheat, and other articles captured last night, which I will bring up with me to-morrow with reports. The schooner *Pilot*, reported as a prize, I have examined and find nothing to sanction her capture, so have released her under oath from the captain. My dispatches regarding the material for Mathias Point were sent per *Freeborn* this morning.

I am, sir, very respectfully,

E. P. MCCREA,
Lieutenant-Commander, Adjutant.

Commodore A. A. HARWOOD.

Report of Commodore Harwood, U. S. Navy, commanding Potomac Flotilla, urging measures for the suppression of smuggling.

COMMANDANT'S OFFICE, NAVY YARD,
Washington, September 22, 1862.

SIR: I beg leave to inform the Department that from various concurrent proofs I am satisfied that vessels are cleared from Baltimore and goods consigned to C. C. Spalding, of Chaptico, Md., which are principally intended to be smuggled into Virginia.

This is an operation beyond my reach, as it is covered by regular papers. I therefore refer the subject to the Department, in the hope that some measures may be taken in the proper quarter to remedy the abuse.

I have the honor to be, with great respect, your obedient servant,

ANDREW A. HARWOOD,
Commodore, Commanding Potomac Flotilla.

Hon. GIDEON WELLES,
Secretary of the Navy.

Report of Commodore Harwood, U. S. Navy, commanding Potomac Flotilla, regarding the proceedings of his command to September 21, 1862.

COMMANDANT'S OFFICE, NAVY YARD,
Washington, September 22, 1862.

SIR: Herewith I have the honor to submit a report of proceedings of Potomac Flotilla to September 21, 1862:

Jacob Bell, Station F, Lieutenant-Commander McCrea, and adjutant.—Made a reconnoissance on St. George's Island; found a number of refugees from Virginia; examined Jackson's and Gainor [Gardner's] creeks, picked up a boat with five men, four furnished with passes from Bremen consul at Richmond. Landed them at Piney Point. Five men at St. George's Island paroled. Heard that letters were sent to Virginia from St. Inigoes post-office; examined, found none. Boats cruise at night from Ragged Point to the mouth of river. Picked up four contrabands, landed them; they were from Maryland. *Jacob Bell* entered Yeocomico River; captured five small boats; opened upon by a body of cavalry; drove them off with shell and grape; boats received several shots. Took a seine 70 fathoms long. Took seven small boats in all; destroyed by order of Lieutenant-Commander McCrea. Twentieth instant, captured schooner *Chapel Point*, up Port Island [Tobacco River] Bay, referred to in letter from Secretary of the Navy under date 15th instant. Also captured three boats off Swan Point, loaded with goods going to Virginia, four white men and some contrabands. Boats destroyed and goods and prisoners forwarded to navy yard. Prisoners sent to provost-marshal.

Freeborn, Station G, Lieutenant-Commander Magaw.—Burned schooner *Arctic* in the Great Wicomico [Va.]. Reports two companies of the enemy between Coan River and the Great Wicomico, seen by launch in cruising, 22d. *Delaware* arrived at navy yard yesterday, bringing the prize schooner *Chapel Point*, spoken of above.

I have the honor to be, with great respect, your obedient servant,

ANDREW A. HARWOOD,
Commodore, Commanding Potomac Flotilla.

Hon. GIDEON WELLES,
Secretary of the Navy.

Report of Commodore Harwood, U. S. Navy, commanding Potomac Flotilla, regarding seizure of a schooner by U. S. S. Delaware, Acting Volunteer Lieutenant Foster, U. S. Navy, commanding.

COMMANDANT'S OFFICE, NAVY YARD,
Washington, September 22, 1862.

SIR: I beg leave to inform you that a vessel answering the description contained in Mr. Shinn's letter to General Wadsworth was taken by the *Delaware* on Saturday last in Port Tobacco River.

Acting Volunteer Lieutenant Foster was informed that she had been employed a few days before in transporting rebel troops across the river.

At the time she was seized there were no persons or goods on board of her.

I have the honor to be, with great respect, your obedient servant,

ANDREW A. HARWOOD,
Commodore, Commanding Potomac Flotilla.

Hon. GIDEON WELLES,
Secretary of the Navy.

[Enclosure.]

ALEXANDRIA, *September 7, 1862.*

SIR: I wrote you some time since respecting the number of boats crossing the Potomac from various points in Maryland.

I have been informed to-day that there is a small, flat, schooner-rigged boat constantly plying from Port Tobacco to Upper Machodoc Creek, Virginia, with mails and passengers. That boat was built here and is owned by a man by the name of Bradshaw, who is now and has been for a long time absent from the city. She is a singularly rigged boat with a very short foremast, and when once seen would always be known. I am also informed that there is a small sloop, painted white, engaged in the same business from Cobb's Point to Virginia. Those fellows know all the gunboats and revenue cutters and keep out of their way. I have written to the Secretary of the Navy to-day. There is a Captain Downing here in a propeller who knows those boats and says he could capture them if authorized to do so; his vessel is now in the employ of the Government.

Very respectfully, your obedient servant,

S. SHINN.

Brigadier-General WADSWORTH,
Washington.

Order of the Secretary of the Navy to Commodore Harwood, U. S. Navy, commanding Potomac Flotilla, regarding limits of his command.

NAVY DEPARTMENT, *September 22, 1862.*

SIR: The limits of the Potomac Flotilla commence at the south entrance of the Pianatank and include that river as well as the Rappahannock. Your attention is called to these points.

I am, respectfully, your obedient servant,

GIDEON WELLES,
Secretary of the Navy.

Commodore A. A. HARWOOD,
Commandant Navy Yard, Washington.

General report of Commodore Harwood, U. S. Navy, commanding Potomac Flotilla.

NAVY YARD, WASHINGTON, *September 23, 1862.*

SIR: I have received your letter of the 22d, defining the limits of the Potomac Flotilla, and your telegram of this morning to send the lightest draft gunboat I have which is in good order for duty to Acting Rear-Admiral Lee; also the *Stepping Stones* when ready.

I shall dispatch the *Delaware* immediately to Acting Rear-Admiral Lee. She has just completed her repairs and would have been this morning at her station on the river but for the inexcusable absence of the commanding officer, Mr. Foster.

I shall be obliged to send her in command of her executive officer.

The work is going on on board the *Stepping Stones* day and night to meet the orders of the Department.

I hope the information which I forward to-day from a reliable source will be my excuse for requesting that the flotilla under my command may not be materially diminished or changed. I have endeavored to systematize matters so that the important points will be covered, the earthworks thrown up by the enemy last year rendered unavailable should he attempt to occupy them, and the cover destroyed.

The knowledge among the officers of the flotilla of persons and localities is valuable, and I would suggest that until the crossing of the river with recruits and stores is effectually checked, it is desirable to have as few changes as possible, the vessels being barely enough to preserve the police of the river, and requiring frequent repairs.

I have the honor to be, with great respect, your obedient servant,

ANDW. A. HARWOOD,
Commodore, Commanding Potomac Flotilla.

Hon. GIDEON WELLES,
Secretary of the Navy, Navy Department.

Report of Commodore Harwood, U. S. Navy, commanding Potomac Flotilla, transmitting information regarding illegal traffic.

COMMANDANT'S OFFICE, NAVY-YARD,
Washington, September 23, 1862.

SIR: I can not vouch for the entire reliability of the person from whom the following information is derived. I have reason to believe that the information itself is in the main correct, and as the informant, Mr. Carrico, was formerly attached to the police in Washington, it will be easy to ascertain how far he may be trusted as a detective to watch and report movements of conspirators and contrabandists in the section where he resides.

It is very desirable at this time that the operations conducted by citizens of Maryland under cover of regular clearances from the custom-house should be stopped. I therefore respectfully request that the cooperation of the military authorities may be invited by the Department, as I have felt it my duty not to encourage interference with the citizens on shore by parties from the flotilla.

At Newport [Md.], near Blossom Point, is a large store from which goods and passengers are regularly carried over to the Virginia shore.

A small sloop, the only one which runs between Alexandria and Blossom Point, clears regularly for fruit, but while down carries goods and passengers across.

A regular commissioned officer of the rebel Army, named Walter A. Bowie, is recruiting in Prince George's County. He is harbored by a man named Cracroft, near Woodville [Md.].

Mr. Carrico, the informant, lives near Woodville.

Samuel Silvey and John Estep live near Cracroft; are both Union men, but dare not avow it.

The judge of this district is cognizant of the presence of the rebel recruiting officer and would cause his arrest, but is intimidated by popular sentiment. Mr. Carrico states that he himself always expresses the strongest secessionist principles to cloak his Union sentiments. He says he knows there will be a strong effort made between this and the early part of October by a large body of men to go into Virginia to escape the draft, and take with them everything they possibly can. The points of crossing will be Mathias Point, Blossom Point, Leonardtown, etc.

The merchants at Leonardtown are laying in large stocks of goods to send over; they have already laid in five stocks of goods this season instead of one, as usual.

Mr. Carrico offers to go to Richmond, if required, or perform any service in his power. If wanted at any time, he may be heard from by addressing Mr. Joseph L. Carrico, Woodville post-office, Prince George's County, Md.

In case of communicating with him, address as above, telling him he will find a letter at Horse Head post-office, Prince George's County, Md., where his movements would not be so liable to detection.

I have the honor to be, with great respect, your obedient servant,

ANDREW A. HARWOOD,
Commodore, Commanding Potomac Flotilla.

Hon. GIDEON WELLES,
Secretary of the Navy, Navy Department.

Report of Acting Master Street, U. S. Navy, U. S. S. Jacob Bell, regarding the seizure of the schooner Southerner and affairs on the lower Potomac.

U. S. S. JACOB BELL,
Potomac Flotilla, off Piney Point, September 23, 1862.

SIR: Yesterday the *Wyandank* left her station to go to Coan River for the schooner *Southerner*. At 5 p. m. she came up to Piney Point with the said schooner in tow, having taken her without any trouble. They found her 5 miles up the river; did not succeed in getting her sails. I have her anchored under Piney Point and have hoisted both canoes upon her deck, ready to go up. I have also three men and a girl (contrabands) from Smith's Point, Va., with a fine sailboat that will do for the seine.

The *Resolute* came up last night out of water and coal. I directed her to anchor, and this morning she filled up with coal from a passing schooner. I supplied her with a breaker of water and at 11 a. m. sent her to her station. She has left a sick man to be sent to the hospital. All quiet below.

Yesterday morning I sent the *Teaser* around to St. Mary's River. Upon her return she was obliged to blow off steam and line her shaft. In the afternoon I sent her up to Mr. Colton's for the seine, but, arriving there too late, Captain Sheridan obtained permission of the *Satellite* to cruise off the Wicomico during the night. Captain S. found some

goods on shore intended for Virginia. He also took a boat that they were using for crossing the river. On his way down to-day he picked up a boat off Nomini Bay with seven refugees, three of whom [were] foreigners and were supplied with passports. These I landed at Piney Point; the balance I send you, together with the prize *Southerner*, and small boats that have been taken by the *Teaser*.

I wish to call your attention to vessels trading on the Maryland shore with merchandise, in regard to what goods shall be passed and in what quantities. This will have a tendency to check in a great measure the trade across the river.

This morning I overhauled the cargo of a vessel bound to Breton's Bay, the most of which I believe will find its way into Virginia, but as the vessel had a proper clearance from Baltimore, with invoice, manifest, bills of lading, etc., all right, I was compelled to give her a pass.

As I am about to close this the U S. S. *Currituck* came up for instructions in regard to boats passing from the eastern shore of Maryland to Virginia with passes given by Captain Dungan, of the revenue cutter *Hercules*. The men in these boats say that they have permission to go over for their families, but when taken have contraband goods on board. I have given Captain Shankland instructions to detain all such men and boats and not regard any passes but those of Commodore A. A. Harwood until further orders.

Hoping that you may devise some means by which I may be governed in passing goods, both in kind and quantity,

I am, sir, very respectfully, your obedient servant,

WM. T. STREET,
Executive Officer, Commanding.

Lieutenant-Commander P. MCCREA,
Adjutant Potomac Flotilla.

Report of Commodore Harwood, U. S. Navy, commanding Potomac Flotilla, regarding prize schooner Southerner and other matters.

COMMANDANT'S OFFICE, NAVY YARD,
Washington, September 24, 1862.

SIR: The *Teaser* came up last night with a prize schooner, the *Southerner*, which the *Wyandank* took possession of in Coan River, Virginia, on the 22d; she had been stripped of her sails.

A fine sailboat also has been captured by boats of the flotilla. Acting Ensign Sheridan, of the *Teaser*, cruising off the Wicomico, took a boat which had been used for crossing the river; also a quantity of goods intended for Virginia.

He picked up a boat off Nomini Bay with seven refugees, three of whom were foreigners and supplied with passes, and were landed at Piney Point.

It is important that some limit should be fixed at this time by the proper authorities both as to the quantity and kind of goods which shall be allowed to pass into certain ports of the Potomac River from which the contraband trade is extensively carried on.

Acting Master Street reports to Lieutenant-Commander McCrea that on the 23d he overhauled a vessel bound to Breton's Bay, the greater part of the cargo of which he believes is intended to be run into Virginia. But this vessel had a regular clearance from Baltimore with invoices, manifests, and bills of lading, all in accordance with law.

Acting Master Shankland, of the *Currituck*, reports that boats passing from the eastern shore of Maryland to Virginia show passes from a captain of the U. S. revenue cutter (name not given) [*Hercules*].

The men in them say that they have permission to go over for their families, but, when taken, have contraband goods on board.

Passes thus given, I presume, are not authorized by the Treasury Department, as they conflict with your orders to maintain the strictest blockade and with the Potomac pass lately instituted by you.

Enclosed is a list of the refugees, contrabands, and goods brought up by the *Teaser*. They will be disposed of as usual in the course of the day.

I have written to District Attorney Carrington with regard to the accumulation of prize goods which are daily deteriorating in value while they remain at the yard.

I have the honor to be, with great respect, your obedient servant,

ANDREW A. HARWOOD,
Commodore, Commanding Potomac Flotilla.

Hon. GIDEON WELLES,
Secretary of the Navy, Navy Department.

[Enclosure.]

List of refugees, contrabands, and goods brought up by the U. S. S. Teaser September 23.

COMMANDANT'S OFFICE, NAVY YARD,
Washington, September 24, 1862.

Refugees.—Edward Furney, George Melvin, Edward Wilson, and Henry Adams, all from Richmond; residences in Maryland.

Contrabands from Smith's Point, Va.—James Barnes, Neil Davis, John H. Jones, and Columbus Jabber.

Goods.—Forty-eight reams of letter paper; one side of calfskin, one of sheep, and a quantity of gray cloth.

Very respectfully submitted by your obedient servant,

ANDW. A. HARWOOD.

Instructions from Commodore Harwood, U. S. Navy, commanding Potomac Flotilla, to Acting Master Rogers, U. S. Navy, commanding U. S. schooner William Bacon, regarding schooner George H. Berry, and suppression of communication between Virginia and Maryland.

NAVY YARD, WASHINGTON, *September 24, 1862.*

SIR: Your letter of the 17th instant was duly received.

1. You were right in permitting the schooner *Berry* to pass, as at the time the naval Potomac passes had not been in force long enough to authorize the detention of vessels furnished with proper clearances. At this time the circular,* a copy of which is enclosed, is in full force.

2. In answer to your question as to what is to be done with the contrabands in your hands, you will deliver them up to the nearest military authorities, and if they decline receiving them, forward them to this yard, with a list of their names.

3. Your utmost vigilance is required in preventing the transportation of rebel recruits or of provisions for the Virginia shore. I have every reason to believe that when the draft commences in Maryland the crossing over at night will increase.

---

*Not found.

4. Look out for Mr. Spearman and catch his pungy if you can, but you will not do this if you keep your vessel directly off the creek; on the contrary, you should depend upon your boats, taking care not to risk them for nothing, and to be with your vessel where you can readily pick them up.

Very respectfully, your obedient servant,

ANDW. A. HARWOOD,
Commodore, etc.

Acting Master WILLIAM P. ROGERS,
Commanding U. S. Schooner William Bacon,
Station D, Potomac River.

Order of the Secretary of the Navy to Commodore Harwood, U. S. Navy, commanding Potomac Flotilla, regarding strict enforcement of blockade.

NAVY DEPARTMENT, *September 25, 1862.*

SIR: I have received your letter of the 24th instant, reporting the proceedings of the flotilla and in reference to trade with the Virginia shore.

You will allow no vessel to import or export merchandise at any part of the blockaded country. Alexandria is the only port open for general traffic within the limits of your command.

You will not regard what are called permits from any officer except the Secretary of the Treasury, War, or Navy, as authorizing the ingress or egress of any vessel in violation of the blockade.

There must be no favoritism or license given to any one or more of our countrymen to traffic within the blockaded region, or to import or export merchandise that would be justly considered as evasive of the blockade and in bad faith.

No officer of the Army or Navy is authorized to grant permits, and you will seize all vessels engaged in illegal traffic.

Such vessels as under the authority of the War or Navy Departments may be engaged to carry supplies to the Army or Navy will take no return cargo from the territory blockaded. The blockade is intended to interdict all trade whatever with the country blockaded during its continuance, and should be rigidly enforced.

I am, respectfully, your obedient servant,

GIDEON WELLES,
Secretary of the Navy.

Commodore A. A. HARWOOD,
Commanding Potomac Flotilla, etc., Washington, D. C.

Order of Commodore Harwood, U. S. Navy, commanding Potomac Flotilla, to Lieutenant-Commander Franklin, U. S. Navy, to assume command of First Division.

ORDER.] NAVY YARD, WASHINGTON, *September 25, 1862.*

SIR: You will assume command of the First Division of the Potomac Flotilla, comprising the district from Wicomico River to Rappahannock, inclusive.

The following vessels are under your command, viz: *Wyandank, Resolute, Currituck, Eureka, Matthew Vassar, Reliance.*

You will station these vessels as you deem necessary to carry out the the object of the flotilla.

All requisitions and matters pertaining to your division will be forwarded through you, with your remarks to me. None others will be noticed.

You will inform me weekly of the proceedings of your division.

Very respectfully, your obedient servant,

ANDW. A. HARWOOD,
Commodore, Commanding Potomac Flotilla.

Lieutenant-Commander S. R. FRANKLIN,
Commanding U. S. S. Aroostook, Potomac Flotilla.

P. S.—*Jacob Bell* and *Ella* are now on detached service, under orders of the adjutant of the flotilla.

Order of Commodore Harwood, U. S. Navy, commanding Potomac Flotilla, to Lieutenant-Commander Magaw, U. S. Navy, to assume command of Second Division.

ORDER.] NAVY YARD, WASHINGTON, *September 25, 1862.*

SIR: You will assume command of the Second Division of the Potomac Flotilla, comprising the district from Budd's Ferry to Wicomico River, inclusive.

The following vessels are under your command, viz, *Yankee, Satellite, Racer, William Bacon, Cœur de Lion, Teaser.*

You will station these vessels as you deem necessary to carry out the objects of the flotilla.

All requisitions and matters pertaining to your division will be forwarded through you, with your remarks, to me. None others will be noticed.

You will inform me weekly of the proceedings of your division.

Very respectfully, your obedient servant,

ANDW. A. HARWOOD,
Commodore, Commanding Potomac Flotilla.

Lieutenant-Commander SAML. MAGAW,
Commanding U. S. S. Freeborn.

P. S.–*Jacob Bell* and *Ella* are on detached service, under orders of the adjutant of the Potomac Flotilla.

Instructions from Commodore Harwood, U. S. Navy, commanding Potomac Flotilla, to Lieutenant-Commander Magaw, U. S. Navy, commanding U. S. S. Thomas Freeborn, regarding destruction of Confederate defenses.

NAVY YARD, WASHINGTON, *September 25, 1862.*

SIR: I have this day directed Lieutenant-Commander Franklin, of the *Aroostook*, to relieve you of your duties as president of the board of examiners now in session.

I wish you to proceed with as little delay as possible to organize a party for the destruction of such of the deserted batteries on the Virginia side of the river as may remain in any degree available for purposes of offense.

I wish also a reconnoissance made of Mathias Point, and the wood on it destroyed, if, upon close examination, the measure is of sufficient importance in a military point of view.

Under any circumstances you will take care to ascertain whether, when necessary, the promontory can be effectually enfiladed, and to clear away, if practicable, any obstruction to a raking fire from the gunboats, should an attempt be made by the rebels to establish a battery on the point.

I wish to know as nearly as possible how far the marsh, which I am told occupies the narrowest part of the point, diminishes the probability of the transportation of such ordnance as might seriously impede the navigation of the river.

All the materials required for the purposes named will be furnished if they have not been already provided.

In addition to the wood axes you will require a sufficient number of pickaxes and shovels for leveling earthworks.

I need hardly caution you not to expose any part of your force unnecessarily.

Take every precaution to guard against surprise, every means to clear the way for your men to work, to cover their operations, and to bring them off safely in case of being attacked by superior force.

Very respectfully, your obedient servant,

ANDW. A. HARWOOD,
Commodore, Commanding Potomac Flotilla.

Lieutenant-Commander SAML. MAGAW,
Commanding U. S. S. Freeborn, Potomac Flotilla.

Letter from the Secretary of the Navy to Commodore Harwood, U. S. Navy, commanding Potomac Flotilla, regarding blockade runners.

NAVY DEPARTMENT, *September 25, 1862.*

SIR: The Department is informed that Mr. Plunkett, at Leonardtown, Md., has boats which he uses to convey news and rebels from Maryland to Virginia.

I am, respectfully, your obedient servant,

GIDEON WELLES,
Secretary of the Navy.

Commodore A. A. HARWOOD,
Commanding Potomac Flotilla, and
Commandant Navy Yard, Washington.

Report of Commodore Harwood, U. S. Navy, commanding Potomac Flotilla, regarding suspicious residents of Maryland.

COMMANDANT'S OFFICE, NAVY YARD,
Washington, September 26, 1862.

SIR: I have received your letter of the 25th, relating to Mr. Plunkett. His name, as well as that of several other individuals on the Maryland shore, has already been reported to me, and orders have been given to the proper section of the flotilla to watch his movements.

I hope the proper military authorities will be able to do something to prevent the great accumulation of goods and the presence of rebel recruiting parties on the Maryland side.

I have been preparing a paper to submit to General Wadsworth, naming several individuals on the Maryland shore who require looking after in time.

I have the honor to be, with great respect, your obedient servant,

ANDW. A. HARWOOD,
Commodore.

Hon. GIDEON WELLES,
Secretary of the Navy.

Report of Commodore Harwood, U. S. Navy, commanding Potomac Flotilla, regarding schooner George H. Berry.

COMMANDANT'S OFFICE, NAVY YARD,
Washington, September 26, 1862.

SIR: It has been reported to me that Mr. H. P. Parker, surveyor of the port of Accomac Court-House (eastern shore of Virginia), granted to the schooner *George H. Berry* (George N. West, master), $31\frac{88}{95}$ tons register, an enrollment and coasting license on the 25th day of June, 1862, for the term of one year.

She was boarded by the U. S. schooner [*William*] *Bacon* above Monroe's Creek, on the Virginia shore, on the 15th of this month, and as the arrangement with regard to the naval Potomac passes had just been instituted at that time, but had not been fully inaugurated, the schooner was allowed to pass, bound, according to her master's account, to Washington. She had on board a small quantity of produce, and from 600 to 700 bushels of oats.

There were no other suspicious circumstances attending the movements of this vessel than her nearness to the Virginia shore, and this seems to have been unavoidable, as it had fallen calm through the night, and the ebb tide drifted the schooner into that position where she was obliged to anchor.

My object in writing this letter is to suggest to you that no notice that I know of has yet been given from the Treasury Department declaring the license granted by subordinates inoperative, and that any doubt upon the subject will lead to vexatious complications.

I have the honor to be, with great respect, your obedient servant,

ANDW. A. HARWOOD,
Commodore, Commanding Potomac Flotilla.

Hon. GIDEON WELLES,
Secretary of the Navy, Navy Department.

Instructions from Lieutenant-Commander McCrea, U. S. Navy, commanding U. S. S. Jacob Bell, to Acting Master Street, U. S. Navy, executive officer.

U. S. S. JACOB BELL,
Potomac Flotilla, September 28, 1862.

SIR: During my absence you will assume command of this vessel, carrying out all general orders of the commander in chief and my local orders.

No permits are to be granted to persons on vessels not properly supplied with sustaining evidence to demand them. To-morrow, from the time the summary court convenes, you can order the prisoner, Melville, his rations, but not until then. You will carefully put in the log book the time the court convened, the time adjourned, and for what purpose.

Supervision of the district or station will be in your charge until the arrival of a superior officer, when you will report in person to him. No inland expeditions will be made to Virginia. Refugees with proper passes (foreigners particularly) must be landed on the Maryland side of the Potomac River.

Very respectfully,

E. P. McCREA,
Lieutenant, Commanding.

WILLIAM T. STREET,
Executive Officer, U. S. S. Jacob Bell.

Report of Lieutenant McCrea, U. S. Navy, commanding U. S. S. Jacob Bell, forwarding prisoner and articles captured by that vessel.

U. S. S. JACOB BELL,
Potomac Flotilla, September 28, 1862.

SIR: I send you, per steamer *Ella*, William Allison, captured by boats of this vessel while crossing from St. George's Island to Virginia, having in charge the following: Four packages and eight boxes—1 package containing pants and coat, 1 package containing tea, 1 package containing blacking, 1 package containing matches, 1 box calico, 1 box marked carbonate soda, 1 box marked mustard, 1 box marked essence coffee, 1 box marked solidified lye, 1 box marked variegated soap, 1 box marked brown soap, 1 box marked pepper.

I am, sir, very respectfully, your obedient servant,

E. P. McCREA,
Lieutenant, Commanding.

Commodore A. A. HARWOOD,
Commanding Potomac Flotilla.

Letter from Commodore Harwood, U. S. Navy, commanding Potomac Flotilla, to the Assistant Secretary of the Navy, requesting increase of force.

COMMANDANT'S OFFICE, NAVY YARD,
Washington, September 29, 1862.

DEAR SIR: In consequence of sickness and desertion, we shall be short of men for the vessel fitting out, as well as to fill vacancies in the flotilla.

Please order about a hundred, with a due proportion of seamen, as soon as possible.

Port Royal's calking finished yesterday; no time to paint her outside. I will put the paint on board of her. She can go as soon as her ordnance stores are on board, but her paymaster is not fit for service, and her doctor has not yet returned from leave.

Yours, truly,

ANDW. A. HARWOOD,
Commodore.

Hon. G. V. FOX,
Assistant Secretary of the Navy.

You will remember that the *Wyandotte* is condemned for outside work. Shall I do anything to her before I order her to join Lee. Pray don't strip me too bare. I have heard to-day of an armed craft (smuggler) in the river, and I should like to keep a sprinkling of regulars to keep the police of the Potomac. Remember you have extended the ground, while the force is diminished.

Yours,

A. A. H.

Report of Commodore Harwood, U. S. Navy, commanding Potomac Flotilla, regarding arrests made, and suggesting measure for checking continued breach of blockade.

COMMANDANT'S OFFICE, NAVY YARD,
Washington, September 29, 1862.

SIR: Lieutenant-Commander McCrea reports the arrest of two men named Benjamin Brookbank and Ignatius Owens, taken in the Wicomico River in the attempt to cross into Virginia.

No other particulars are given but that they had with them twelve cases of goods, viz, 4 large boxes marked matches, 4 small boxes marked blacking, 1 box marked ¼7 reams, 1 box no mark, 1 box 60 pair women's F. M. boots, 1 box soap, all directed to D. W. Sly, Washington, D. C.; also of the arrest of three refugees, Charles Gould, D. S. Gardner, Charles Lewis, who were crossing from Virginia to Maryland. The men have been sent to the provost-marshal, and the goods will be turned over to the district court as usual.

I beg leave to mention that the places of confinement in Washington are so crowded that the general in command of the military district informs me that he is embarrassed with the numbers of prisoners in custody, and hence many persons have been liberated who under other circumstances would have been treated with more rigor.

General Wadsworth is perfectly willing, I believe, to detain any who may be designated as dangerous persons by the naval authorities, but these persons caught in smuggling are not, I observe, generally considered in that light.

These contrabandists are from a disaffected portion of Maryland, and are not only engaged in forbidden traffic, but in recruiting the rebel forces and in carrying information to the rebels.

Such men should be freed where they are caught, if freed at all, as a transient visit to Washington puts them to no special inconvenience, and affords them a favorable opportunity for gathering intelligence and hatching new and more secure plans of operation.

If it were a certainty that every man caught crossing from the Maryland to the Virginia shore would be subject to close confinement for a definite period, not less than six months for instance, it would produce an effectual check to the violation of the blockade.

I have the honor to be, with great respect, your obedient servant,

ANDW. A. HARWOOD,
Commodore, Commanding Potomac Flotilla.

Hon. GIDEON WELLES,
Secretary of the Navy.

[Endorsement.]

The contrabandists caught smuggling or running blockade should be detained.

[WELLES.]

Report of Commodore Harwood, U. S. Navy, commanding Potomac Flotilla, of the destruction of Confederate magazines at Lower Shipping Point.

COMMANDANT'S OFFICE, NAVY YARD,
Washington, September 30, 1862.

SIR: Lieutenant-Commander Magaw reports the destruction of the rebel bomb-proof magazines at Lower Shipping Point, which I had instructed him to blow up.

They were seven in number and the work was found heavier than anticipated.

A small body of rebel cavalry made its appearance, but dispersed upon the discharge of a volley of musketry from our side.

William Benson, of the *Satellite*, was wounded by the discharge of his own piece, which he was handling carelessly. He came up in the *Dragon* and has been sent to the hospital.

I have the honor to be, with great respect,

ANDW. A. HARWOOD,
Commodore, Commanding Potomac Flotilla.

Hon. GIDEON WELLES,
Secretary of the Navy.

Report of Commodore Harwood, U. S. Navy, commanding Potomac Flotilla, regarding seizure of sloop Thomas Reilly, for breach of blockade.

COMMANDANT'S OFFICE, NAVY YARD,
Washington, October 2, 1862.

SIR: The *Eureka* arrived this morning, bringing to the yard the sloop *Thomas Reilly*, seized by the *Freeborn*, Lieutenant-Commander Magaw, for violating the blockade. George Saunders, of Missouri, Samuel Hunt and Richard Hunt, of Maryland, were taken in her.

Acting Ensign J. J. Brice brought up with him an old launch which had been shortened and patched up and converted into a sailboat. She was taken by the *Eureka* in the act of running the blockade, on the 1st instant, at the mouth of Quantico Creek, Virginia, and manned by three colored persons, viz, John Douglass, William Saunders, Benjamin Atkins; when arrested they had concealed about their persons arms and newspapers.

The *Eureka* also brought up Henry W. Haack, a German. He showed a certificate of his nationality from the consul at Bremen, and a pass from the rebel General [J. H.] Winder, and has been released.

The prisoners have been placed in the custody of the provost-marshal.

I have the honor to be, with great respect, your obedient servant,

ANDREW A. HARWOOD,
Commodore.

Hon. GIDEON WELLES,
Secretary of the Navy.

Order of the Secretary of the Navy to Commodore Harwood, U. S. Navy, commanding Potomac Flotilla, regarding traffic in wood on the Potomac River.

NAVY DEPARTMENT, *October 2, 1862.*

SIR: The subject of allowing parties to bring wood from the Virginia shore within our lines is referred to you to act at discretion. If

permission is granted it should be accompanied with suitable restrictions, and all prudent guaranties should be required.

Very respectfully,

GIDEON WELLES,
Secretary of the Navy.

Commodore A. A. HARWOOD,
Commandant Navy Yard, Washington.

Report of Lieutenant-Commander Phelps, U. S. Navy, commanding U. S. Coast Survey steamer Corwin, of circumstances connected with expedition to house of Dr. Stewart.

U. S. S. CORWIN,
Potomac River, October 2, 1862.

SIR: Your letter dated September 30, enclosing a report of Dr. R. H. Stewart, was this instant received and I respectfully state that with one exception the doctor is entirely in error.

On the return of the boat, the officer in charge reported the whole affair, and immediately afterwards I thoroughly investigated the matter, and the following is a full report of the circumstances attending the case:

On the 23d ultimo I anchored in Nanjemoy Reach about mid-channel, and about three-fourths of a mile from a house on the Virginia shore, which I had understood was "untenanted and belonged to a Dr. Stewart, a wealthy and influential secessionist, and was used as a depot for illicit traffic." The windows and doors appeared to be open at all hours, and I failed to discover, with a spyglass, any signs of life about the place during the day.

About 11 p. m., on September 24, several suspicious lights were observed from this steamer in the neighborhood of this house, and about 9 p. m., on the 25th, a rocket was sent up in its vicinity. The next morning I dispatched an armed boat in, and the following is a correct account of the affair as reported by the officer, whose statement was fully substantiated by the investigation:

On the landing of the party they discovered two or three negroes, and as they approached the door, which was open, were met by a mulatto woman, who invited them in and informed the officers that the house was owned by Dr. Robert Stewart, and at the commencement of the war the family had moved with nearly all of their effects to the hall, situated about 1 mile inland, and that she was left in charge as housekeeper.

After cautioning the party not to molest anything the officer proceeded to examine the rooms, finding only a few pieces of furniture and a few miscellaneous articles of little or no value. In the library he discovered a lot of blue lights and signal fires, an old spyglass, and a parcel of old ragged novels, reports, and periodicals scattered over the floor, and in the cellar, the door of which was open, about one dozen sacks of wheat ready for transportation, firearms, three kegs of nails, and a barrel of oil, apparently, by its marks, recently received from Baltimore.

In a short time the party returned to the boat, when the housekeeper appeared with a picture, which she claimed to have the right to dispose of, and asked $2.50 for it. The officer offered her that amount in United States currency, which she refused and accepted a $5 Confederate note,

which the officer had obtained as a curiosity at West Point, Va. Immediately after this transaction Mrs. Stewart rode up in an excited state, dismounted, seized the picture, reprimanded the woman for daring to sell the Yankees anything, and informed the purchaser that he should not have it at any price, and for several minutes refused to return the note. The officer next enquired if she would not sell him a few chickens and eggs, when she commenced a violent tirade against the United States and the Yankees, and stated that if she was overflowing with provisions and a Yankee ship was starving she would not sell them a dollar's worth; that she and her husband were secessionists and she gloried in it, and Dr. Stewart was the most violent secessionist in the State and she thanked God for it, and if they sold the Yankees a cent's worth they would consider themselves disloyal to the South.

The boat shoved off and returned on board, when it was discovered that one of the party had brought off the spyglass and a few ragged novels. I immediately had an examination made and the articles returned to the place from whence they had been taken.

Beyond the above nothing was taken, no depredations or improper acts committed. The doors and windows of the house were open and no objections were made to the entering of the party or to the examination of the premises. No locks were broken or doors forced, neither were there any sheets or pillowcases taken or seen by any of the party, but the whole affair was conducted in an orderly and proper manner.

You but do me justice when you assure me of your belief that I would not countenance or permit any act tending to disgrace or bring discredit on our flag and service.

I will report for your information that, since the above, I have been informed that Stewart's house is a regular headquarters for smugglers, and that on the night of the 21st ultimo a man landed there from Port Tobacco with a lot of trunks, and Dr. Stewart furnished a wagon to convey him to Port Royal [Va.]. The man belonged to the rebel Army.

I am, respectfully, your obedient servant,

THOS. S. PHELPS,
Lieutenant-Commander, U. S. Navy.

Commodore A. A. HAROOOD, U. S. Navy,
Commanding Potomac Flotilla, Washington, D. C.

Letter from the Secretary of the Navy to Commodore Harwood, U. S. Navy, commanding Potomac Flotilla, regarding measures for the prevention of illegal traffic.

NAVY DEPARTMENT, *October 3, 1862.*

SIR: Extracts from your communication of the 23d ultimo were sent to the Secretary of War, and your request for the cooperation of the Army in stopping the improper traffic carried on between the Maryland and Virginia shores submitted to his consideration.

In reply, he states that on referring the subject to the general in chief, he suggested that the matter be left entirely to the discretion of the navy officers, General Banks furnishing such number of men as may be required on navy vessels to assist in making captures, and that the War Department had instructed Major-General Banks accordingly.

On receiving your letter of the 19th ultimo, the Department wrote to the Secretary of the Treasury in reference to the clearance of vessels from Georgetown [D. C.] without requiring the masters to take the oath

of allegiance, and is informed in reply that the collector at that port, as also the collector at Alexandria, has been instructed to administer the oath to masters and owners, etc., before clearing vessels.

The Treasury Department has stated that immediate attention would be given to the practice of shipping goods from Baltimore to Chaptico, supposed to be intended to be smuggled into Virginia, which was the subject of your letter of the 22d ultimo.

Referring to your letter of the 29th ultimo, the Department concurs with you in the opinion that the contrabandists caught smuggling and running the blockade should be detained.

I am, respectfully, your obedient servant,

GIDEON WELLES,
Secretary of the Navy.

Commodore A. A. HARWOOD,
Commandant Navy Yard, Washington, and Commanding Potomac Flotilla.

Order of Lieutenant-Commander McCrea, U. S. Navy, commanding U. S. S. Ella, to Acting Master Shankland, U. S. Navy, commanding U. S. S. Currituck, designating limits of his station.

U. S. S. ELLA,
Off Piney Point, October 3, 1862.

SIR: You will assume command of the station from Smith's Point to Piankatank River, inclusive, until relieved by a senior officer. Vessels upon that station will report to you the result of obedience to any orders you may give them, and you will report in writing to me as often as practicable your movements and matters pertaining to the station. You will carry out all orders and instructions promptly, and are held responsible for the same performance of those under your command. There is but one Potomac Flotilla, and all vessels are under the command of Commodore A. A. Harwood, commander in chief.

Very respectfully, etc.,

E. P. MCCREA,
Lieutenant-Commander and Adjutant.

Acting Master W. F. SHANKLAND,
U. S. S. Currituck.

Report of Acting Master Smith, U. S. Navy, commanding U. S. schooner Arletta, regarding the loading of boats in Accotink Creek, Virginia.

U. S. MORTAR SCHOONER ARLETTA,
Off Alexandria, October 3, 1862.

SIR: The longboats (previously referred to) were reported to me by captains of longboats who came to this vessel for passes to the Maryland shore. They report that they can be seen loading nearly every day in Accotink Creek, Virginia.

The longboats mentioned have never got a naval pass from this vessel. I will find out if they have obtained a clearance from the custom-house.

Respectfully, your obedient servant,

THOMAS E. SMITH,
Acting Master, Commanding U. S. Schooner Arletta.

Commodore ANDREW A. HARWOOD,
Commanding Potomac Flotilla.

Report of Commodore Harwood, U. S. Navy, commanding Potomac Flotilla, regarding needed cooperation of War and Treasury Departments in the suppression of illegal traffic.

COMMANDANT'S OFFICE, NAVY YARD,
Washington, October 4, 1862.

SIR: One of the aids of General Banks called upon me a day or two ago in reference to furnishing soldiers to assist the Navy in making captures, and I then perceived that the whole scope of my views had been misunderstood with regard to the subject of cooperation.

We do not want any assistance in maintaining the police of the river, but there are persons along the Maryland shore who are actively employed in assisting in every way their rebel neighbors, and these people the naval arm can not reach; neither can the civil authority, on account of the sympathy of the surrounding population. To be brief, it must be done through the custom-house, by giving notice of extraordinary shipment of goods to the ports on the Maryland side of the Potomac, and through the military authorities who can prevent the recruiting of men for the rebel cause, if it be true that this is done in the face of the civil magistrates.

I sent a particular list of the persons and places which required surveillance in order to break up the sources of all this troublesome intercourse with Virginia.

The flotilla has been vigilant in doing its part, in arresting parties in crossing, and if means are taken to prevent the supply of goods from being accumulated the whole traffic will soon be broken up.

I have the honor to be, very respectfully, your obedient servant,
ANDW. A. HARWOOD,
Commodore, Commanding Potomac Flotilla.

Hon. GIDEON WELLES,
Secretary of the Navy.

[Endorsement.]

Write Secretary Treasury, sending extract, and suggesting that Commodore Harwood, commanding flotilla, be advised of any extensive shipments of goods for any place in Maryland on the Potomac.

[WELLES.]

Letter from Commodore Harwood, U. S. Navy, commanding Potomac Flotilla, to the General in Chief, U. S. Army, transmitting copy of letter to Brigadier-General Wadsworth, U. S. Army, regarding measures of cooperation.

NAVY YARD, WASHINGTON, *October 4, 1862.*

SIR: I enclose for the information of the Commanding General the copy of a letter to General Wadsworth which will explain the nature of the assistance required from the Army and the Treasury Department to put a stop to the supplies of men, goods, etc., which are carried from the Maryland to the Virginia shore.

No assistance is required in men on board the vessels of the flotilla, which are fully manned and armed, but such visits by the military authorities to places and surveillance of persons in disaffected districts of Maryland as may put a stop to intercourse with the enemy which the naval arm can not reach.

I will give all the information in my power bearing on the subject which may suggest the best means of stopping operations which the draft in Maryland will be likely to stimulate.

Be pleased to return the accompanying copy of the letter to General Wadsworth, unless the General in Chief should desire to retain it.

I am, sir, very respectfully, your obedient servant,

ANDW. A. HARWOOD,
Commodore, U. S. Navy, Comdg. Navy Yard and Potomac Flotilla.

Captain R. B. IRWIN, U. S. Army,
Aid-de-Camp to General in Chief.

[Enclosure.]

NAVY YARD, WASHINGTON, *September 26, 1862.*

GENERAL: I have the satisfaction to inform you that the information forwarded by you to me and to the Navy Department has resulted in the seizure by the flotilla under my command of the vessel employed in transporting goods and recruits from the Maryland to the Virginia shore.

I shall feel particularly obliged for any hints which your position may enable you to give me which may render the blockade more effective.

If, by any means within your power, you can cause a stop to be put to the plans laid in Maryland to recruit the rebel forces and aid in their subsistence and comfort, you will materially further the interests of the Government.

To this end I take the liberty of giving you, as concisely as the nature of the case will admit, the substance of the various reports with regard to persons and places which can not be reached by the officers of the flotilla.

At Newport, near Blossom Point, is a large store, from which goods and passengers are regularly transported to the Virginia shore. A small sloop, the only one which runs between Alexandria and Blossom Point, clears regularly for fruit, but while down carries goods and passengers across.

By the order of the Navy Department, Alexandria is the only port open for general traffic within the limits of my command, which extends to the mouth of the Rappahannock and Piankatank rivers.

Advantage is reported, you will perceive, to have been taken of this unavoidable exception, and the abuse, as far as the land is concerned, can only be reached by the land forces.

A regular commissioned officer in the rebel Army named Walter A. Bowie is said to be recruiting in Prince George's County, and is harbored by a man named Cracroft, near Woodville. Mr. Carrico, the informant, lives near Woodville. He represents Samuel Silvey and John Estep, two Union men, as residents of the same neighborhood near Cracroft, but as afraid to avow their loyal sentiments.

He, Carrico, states that the judge of the district in question is cognizant of the presence of the rebel recruiting officer and would order his arrest, but is intimidated by the surrounding disloyal sentiment.

He, Carrico, further states that he, himself, always expresses the strongest secessionist principles to cloak his own attachment to the Union.

He says he knows that there will be a strong effort made between this and the 1st of October by a large body of men to cross over into Virginia to escape the draft, and take with them all that they possibly can. The points of crossing will be Leonardtown and Blossom and Mathias points.

The merchants of Leonardtown are laying in stocks of goods to send over. They have already laid in five stocks of goods this season instead of one, as usual.

They can be supplied by vessels provided with regular clearances from Baltimore and Alexandria.

Mr. Carrico was formerly attached to the Washington police, under Mayor Berret. I can not vouch for his entire reliability, nor how far he can be trusted to watch and report the movements of conspirators and contrabandists in the section where he resides.

I have reason to credit much of his information in relation to their operations, from intelligence derived from other sources. He offers to perform any service in his power. His address is, Mr. Joseph L. Carrico, Woodville post-office, Prince George's County, Md., but as this is a disloyal region, and he wishes, in order to avoid being suspected, that a letter sent to that address may simply inform him that he will find a communication at Horse Head post-office, Prince George's County, where he would not be so liable to be watched.

A man by the name of Plunkett, near Leonardtown, has boats which he uses to convey rebels and goods across to Virginia.

Blakistone Island.—In the neighborhood of this island resides a person by the name of Colton, who is well known but differently estimated by the officers of the flotilla. There can be no harm in keeping him in view.

He calls himself a Union man, and was appointed an enrolling officer, but declined. He was a gambler by profession; talked of wanting salt, while the officers of the Coast Survey steamer *Corwin* saw three or four sacks in his barn.

My informant, Lieutenant-Commander Phelps, of the *Corwin*, says he told him that he had a spyglass with which he could see 15 miles up or down the river, and that one of his boats can cross it in forty minutes; that salt was worth on the other side $100 the sack, and the poorest whisky $10 the gallon, Maryland, not Confederate money.

Captain Phelps says that he spoke unguardedly and betrayed decided secession sympathies.

As yet he has not been detected in any illegal act, and came to my office the other day to ask for a passage for himself and daughter, an act which may be either innocence or effrontery.

Chaptico.—Vessels are cleared from Baltimore and goods are consigned to C. C. Spalding, of Chaptico, Md. These goods are intended evidently for the Virginia market.

Spalding, judging by receipts and other incidental evidences, is doing a large business in this line. I believe the firm in Baltimore is a rich one.

I would apologize to you for the length of this letter, as I think it probable much of the information may be new to you, but I have felt it a duty to omit no possible chance to prevent operations, which, concocted on shore and covered by regular papers, are beyond my reach. The pungies and other small vessels engaged in the transit of the river are generally manned only by negroes, who are forced into that service by their masters, who thus keep out of harm's way.

I have the honor to be, yours, respectfully,

ANDW. A. HARWOOD,
Commodore, etc.

Brigadier General JAMES S. WADSWORTH,
Military Governor of the District, etc.

Weekly report of Lieutenant-Commander McCrea, U. S. Navy, commanding U. S. S. Jacob Bell.

U. S. S. JACOB BELL,
Potomac Flotilla, October 5, 1862.

SIR: I respectfully submit my report for the week ending October 5 (Sunday).

I conferred with Lieutenant-Commander Magaw in passing down the river on Tuesday last. He informed me the work of destroying the works at Shipping and Cockpit points is progressing, though heavier than he at first supposed.

The paymasters have the *Wyandank* performing the duty directed by the Secretary of the Navy.

I have seen Mr. E. T. Plowden and have hired his wharf, agreeably to your instructions, paying $140 per month.

The *Currituck* arrived this evening with thirteen contrabands. I ordered them to be given up to the military authorities at Point Lookout. If not received by them, [to] be put on shore in a loyal district, and then return to her station.

I would state that the mortar vessels at Baltimore, if not needed there, would be of great service to carry out the object of the flotilla, as they could be stationed alternately with the steamers.

Regarding the storeship *Wyandank* I would state that, in my opinion, to avoid a complication of matters, two paymasters have charge of the accounts and one charge of the stores. I would suggest that the storeship be placed at the mouth of the Wicomico River, which is about the center of your command. I would state, also, that one Dr. Walton, of Leonardtown, Md., called upon me at Piney Point and stated that many persons in that place wished the contraband trade broken up; that the poorer classes were suffering, and the stores would not sell, save by wholesale and [at] exorbitant prices. Messrs. Raley and Lucas are the principal traders with Virginia, I have heard.

Very respectfully, your obedient servant,

E. P. MCCREA,
Lieutenant-Commander and Adjutant.

Commodore A. A. HARWOOD,
Commanding Potomac Flotilla.

Report of Commodore Harwood, U. S. Navy, commanding Potomac Flotilla, regarding destruction of Confederate defenses, and the capture of sloop Ann Squires.

COMMANDANT'S OFFICE, NAVY YARD,
Washington, October 5, 1862.

SIR: The Second Division of the Potomac Flotilla, under Lieutenant-Commander Magaw, has been employed in completing the destruction of the rebel batteries and bombproofs in the neighborhood of his command.

This work, which required more labor than was anticipated, will be completed probably to-morrow.

I would suggest that no information shall be given in the newspapers relating to these operations until they are completed.

Lieutenant Commander Magaw reports, October 4, that he sent a party to Dumfries and destroyed the telegraph office and wires of the line from Occoquan to Richmond, via Fredericksburg.

That on the evening of the 3d he sent Acting Master Plunkett, of the *Freeborn*, to surprise and arrest Captain John Tayloe, of the Ninth Virginia Cavalry, on leave at his residence, opposite Maryland Point.

Captain Tayloe arrived at the yard this morning in the *Yankee* and was at once placed in the custody of the provost-marshal of this district.

On the 1st of October a boat was sent from the U. S. mortar schooner *William Bacon*, belonging to Lieutenant-Commander Magaw's division, which found and seized the sloop *Ann Squires*, at the head of Wicomico Bay. She hailed from Deal's Island, and had on board of her at the time of her seizure two white men, who gave their names as Max Stadelhofer and J. T. Gilman, and a free colored man, Joseph Butler.

The vessel was laden with contraband goods, and had also a package of letters, most of which appear to be from Chaptico, intended for Richmond.

The men have been placed in the custody of the military authorities.

The vessel had neither register nor license of any description.

The men confessed themselves citizens of Virginia, according to the report of Acting Master's Mate Ripley, who took them, and that they were only waiting for wind to cross the river. Also that there were five others who held shares in the sloop, absent at the time of their seizure.

I have separated from a mass of unimportant bills and accounts, principally belonging to Gilman, four papers belonging to Stadelhofer, two of which may deserve the attention of the State Department, and which are herewith appended.

The first is a certificate from Edward W. Top, the consul of the city of Bremen, that Max Stadelhofer made oath that he is a native of the Duchy of Baden, and has never taken the oath of allegiance to the United States or to the Confederate States of America.

The second is a receipt, not signed, in a German handwriting, for $919 from Mr. Stadelhofer, to buy goods.

The inference appears to me plain that consular certificates are abused by foreigners engaged in unlawful trade, who call themselves citizens or aliens, as may best subserve their purposes, and there is reason to believe that this class of persons is largely engaged in the contraband trade to Virginia.

I have the honor to be, with great respect, your obedient servant,

ANDW. A. HARWOOD,
Commodore, Commanding Potomac Flotilla.

Hon. GIDEON WELLES,
Secretary of the Navy.

Letter from Commodore Harwood, U. S. Navy, commanding Potomac Flotilla, to Lieutenant-Commander Magaw, U. S. Navy, commanding Second Division Potomac Flotilla, referring to sloop Ann Squires.

NAVY YARD, WASHINGTON, *October 6, 1862.*

SIR: Your report with reference to the operations of your division of the flotilla for the last week has been received.

I am at present too much occupied to notice them in detail, but have done so to the Navy Department, and avail myself of this opportunity to express my entire satisfaction with the result of your exertions to this time.

I hope soon to hear that the destruction of the batteries has been completed.

The mail taken on board the *Ann Squires* had letters containing important information.

Very respectfully, your obedient servant,

ANDW. A. HARWOOD,
Commodore, Commanding Potomac Flotilla.

Lieutenant-Commander SAML. MAGAW,
Commanding Second Division Potomac Flotilla.

Report of Commodore Harwood, U. S. Navy, commanding Potomac Flotilla, referring to information obtained from mail captured with sloop Ann Squires.

COMMANDANT'S OFFICE, NAVY YARD,
Washington, October 6, 1862.

SIR: I beg leave to draw your attention especially to the letters of Dr. J. C. [B.?] Cooke, of Chaptico, Md., which are the most important of those taken in the mail taken on board the *Ann Squires*.

I think these letters will show the kind of cooperation required to put a stop to the intercourse between the Maryland and Virginia shores.

They also show the wholesome effects of the regulations made by the Treasury Department to prevent the accumulation and sale of goods for unlawful purposes.

It appears to me, however, that the prospect of "doubling every day," to use Dr. Cooke's phrase, and the sympathy with the rebel cause, will be apt to overcome the scruple of "breaking promises."

The coming and going of Confederate young strangers at Chaptico seems to have met with little or no impediment.

If the draft takes place in the southern counties of Maryland, renewed efforts will be made to cross and carry articles of great necessity over the river.

Such men as Dr. B. Cooke, whose sons are in the rebel Army, and whose avowed sentiments are hostile to the Government of the United States, will, I presume, be thought worthy of arrest and detention. His residence is Chaptico, his name B. Cooke, as I infer by the initials at the end of Letter B.

If any officer of the War and Treasury Departments could be detailed to confer with me, and to receive and act on the information which I am frequently receiving, it would, I believe, insure prompt and decisive action, and relieve the Departments of details which are too important to be neglected, but which in the present press of work require a specialty to be properly attended to.

I have the honor to be, sir, with great respect, your obedient servant,

ANDW. A. HARWOOD,
Commodore, Commanding Potomac Flotilla.

Hon. GIDEON WELLES,
Secretary of the Navy.

Report of Lieutenant-Commander McCrea, U. S. Navy, commanding U. S. S. Jacob Bell, transmitting reports of Acting Master Babcock, U. S. Navy, commanding U. S. schooner T. A. Ward, regarding captures by that vessel.

U. S. S. JACOB BELL, POTOMAC FLOTILLA,
Piney Point, October 7, 1862.

SIR: I have the honor to transmit the reports of Acting Master Babcock, of the mortar schooner *T. A. Ward*. I am happy to state

that the swift man-of-war boat, supposed to be one belonging to the *Merrimack*, and said to be employed by the Confederate Government, has been captured by boats from the mortar schooner *Ward*, belonging to this division. I had ordered a strict "lay" for her for some days. I send the report of her capture. I send as prisoners of war three of her crew namely, David Stuart, sailor (and one of the crew of the late *Merrimack*), Warren Hansiell, and John Ferguson. The boat I retain to use for night work. I send a quantity of goods captured from boats cruising, and a number of refugees, at least they call themselves so. Duplicate lists are enclosed.

Please send the *Ella* immediately back, as I have only one steamer on the lower Potomac besides the guard ship, and I have not finished my affairs. The *Teaser* left for the Rappahannock this morning; she will return to-morrow evening. The destruction of the batteries is finished. I enclose a mail found on the person of John Ferguson, and a mail brought from Virginia by Miss Susan Saddler, one of the female refugees. I would come up myself, but have the coal department business to finish.

Very respectfully, your obedient servant,

E. P. McCREA,
Lieutenant-Commander, U. S. Navy, Adjutant Potomac Flotilla.

Commodore A. A. HARWOOD,
Commanding Potomac Flotilla.

[Enclosures.]

U. S. MORTAR SCHOONER T. A. WARD,
Blakistone Station, October 4, 1862.

SIR: I hereby respectfully report the capture of a large seven-oared boat, apparently a man-of-war boat. I also captured three of her crew, who were concealed in a cornfield near by, and where the boat was captured. They state that they came over from the Virginia shore on the night of the 3d and attempted to return on the same night, but were prevented from doing so by the presence of one of the guard boats.

There was also a dead soldier lying on the beach, close to the boat, who, they state, belonged to the First Maryland Regiment (rebel). They state that he accidentally shot himself while attempting, as he supposed, to fire into one of our guard boats, but which proved to be a small skiff drifting on shore with no one in her. There were eleven persons came over in the boat from the Virginia shore, but I succeeded in capturing but three of them. Their names are as follows:

Warren Hansiell, of South Amboy, N. J.
David Stuart, of New Orleans, La.
John Ferguson, of Charles County, Md.

I will send enclosed with this report seven letters which were found in the possession of John Ferguson.

I am, sir, very respectfully, your obedient servant,

W. L. BABCOCK,
Acting Master, Commanding Mortar Schooner T. A. Ward.

Commodore A. A. HARWOOD,
Commanding Potomac Flotilla.

U. S. MORTAR SCHOONER T. A. WARD,
Blakistone Station, October 5, 1862.

SIR: I hereby respectfully report to you the capture of three boats by Mr. William Hatch, acting master's mate of this vessel, while attempting to run the blockade from Breton's and St. Clement's bays.

I send enclosed Mr. Hatch's statement* of the capture, together with a list of articles captured.

I am, sir, very respectfully, your obedient servant,

WM. L. BABCOCK,
Acting Master, Commanding Mortar Schooner T. A. Ward.

Commodore A. A. HARWOOD,
Commanding Potomac Flotilla.

[Telegram.]

NAVY DEPARTMENT, *October 7, 1862.*

Send the *Wyandotte* to Acting Rear-Admiral Lee.

GIDEON WELLES,
Secretary Navy.

Commodore HARWOOD,
Commandant Navy Yard, Washington, D. C.

Letter from Commodore Harwood, U. S. Navy, commanding Potomac Flotilla, regarding arrival of prize goods, prisoners, and refugees from the lower Potomac.

COMMANDANT'S OFFICE, NAVY YARD,
Washington, October 8, 1862.

DEAR SIR: The *Ella* arrived this morning from the lower end of the Potomac. She brings prize goods, prisoners, and refugees, particulars respecting which will be forwarded later in the day.

I have not time at present to do more than send the Richmond papers and a memorandum which I took this morning from an intelligent refugee.

It occurs to me that you might desire to interrogate this person. I have therefore to request that in case you would like to see him you will apprise me by telegram, so that he may present himself at the Department before he goes to the provost-marshal.

We have caught a man-of-war's boat, and McCrea writes me that the batteries are completely demolished. Magaw's report has not arrived.

Yours, in haste,

ANDREW A. HARWOOD.

Hon. GUS. V. FOX,
Assistant Secretary of the Navy.

---

*Not found.

[Enclosure.]

Memorandum for the Navy Department of information derived from Emmanuel Shaw, refugee brought up in the Ella, October 8.

Emmanuel Shaw, of Maryland, Baltimore County, machinist, left Richmond Friday morning last; was at work at the Tredegar Foundry; got pass to go to Cold Harbor, and kept straight out Mechanicsville turnpike and escaped without interruption.

At the Tredegar Foundry they are making guns and all kinds of munitions. General Anderson is there, having resigned from the Army.

The *Richmond*, ironclad, would be ready in about two weeks; her engines are old and said to be not of much account.

They are making a large rifle gun at the Tredegar Works for this vessel; gun about 15 or 16 feet long, caliber 7⅞ inches; three bands superposed, each 2 inches thick round the reinforce; wrought-iron, steel-pointed shot; end fashioned diamondwise.

There are not many troops in Richmond. Mr. Shaw understood they were drawing troops off from Jackson's forces and bringing them to Drewry's Bluff (Fort Darling).

Report of Commodore Harwood, U. S. Navy, commanding Potomac Flotilla, of the capture by U. S. schooner T. A. Ward, of three boats engaged in blockade running.

COMMANDANT'S OFFICE, NAVY YARD,
Washington, October 8, 1862.

SIR: The *Ella* arrived last night, bringing accounts from the lower Potomac.

Between the 3d and 5th, three boats were taken in the attempt to run the blockade from St. Clements and Breton's Bay to Virginia, by a party from the *T. A. Ward*. The men escaped in the woods. The boats being useless were broken up, after the goods in them had been taken out.

On the 4th a large seven-oared boat, which Lieutenant-Commander McCrea had heard of some time since, was captured by a party also from the *T. A. Ward*. This boat is supposed to have belonged to the old *Merrimack*, and to have been successfully employed by the Confederates in transporting recruits, etc. The crew consisted of eleven men, who all deserted her; three of them, however, were taken in a cornfield, where they had concealed themselves—David Stuart, of New Orleans (sailor), late of the *Merrimack*; Warren Hansiell, of South Amboy, N. J.; John Ferguson, of Charles County, Md.

I enclose the letters found on the person of Ferguson, who seems to have been engaged in carrying a mail between Richmond and Baltimore.

The *Ella* also brought with her twelve refugees, including the wife and two children of one of them, a mechanic, who has been lately working in the Tredegar Foundry.

All these persons have been sent to the provost-marshal.

I have the honor to be, with great respect, your obedient servant,

ANDREW A. HARWOOD,
Commodore, Commanding Potomac Flotilla.

HON. GIDEON WELLES,
Secretary of the Navy, Navy Department.

The burning of the schooner Frances Elmor, October 8, 1862.

Report of Commodore Harwood, U. S. Navy, commanding Potomac Flotilla, transmitting report of Acting Master Ives, U. S. Navy, commanding U. S. S. Yankee.

NAVY YARD, WASHINGTON, *October 10, 1862.*

SIR: I have the honor to transmit for your information a report made by Acting Master T. Poynton Ives, commanding the U. S. S. *Yankee*, of the burning of a schooner found off Bluff Point, Va., on the night of the 7th instant.

I have the honor to be, with great respect, your obedient servant,

ANDW. A. HARWOOD,
Commodore, Commanding Potomac Flotilla.

Hon. GIDEON WELLES,
Secretary of the Navy.

[Enclosure.]

U. S. S. YANKEE,
Potomac Flotilla, October 8, 1862.

SIR: Last night, at a few minutes after 12 o'clock, while lying at anchor off Pope's Creek, a vessel was reported on fire to me some distance down the river.

I immediately got underway and proceeded down to her assistance. We found her nearly off Bluff Point, and about in mid-channel. The vessel was a schooner and was loaded with hay.

On arriving near her we could see no one on board, although her boat was astern. The fire had by this time reached the heel of the bowsprit.

We remained near her, and underway, for nearly two hours, and when the boat's painter parted I succeeded in securing the boat, although in a damaged condition, her stern being entirely consumed, as were also the blades of the four oars.

The boat had evidently been hanging at the stern davits, for the block of the fall was attached to the ring in the stern when we took her.

From two schooners that were anchored near by I learned that as soon as they saw the fire they sent their boats (the fire had not then reached the mainmast), but found no one on board. They say that the forecastle had every appearance of having been recently inhabited, and one captain says that one of his men found a lamp (unlighted) on the windlass, and also a tin can, containing two or three pounds of powder, which he threw overboard.

The captain of one schooner says that immediately after the fire broke out he saw a boat leave the schooner and pull in for the Virginia shore.

From all the evidence I have little doubt but that the vessel was robbed and the crew made prisoners by the rebels, who then fired the vessel and escaped.

The above is respectfully submitted by your obedient servant,

THOMAS POYNTON IVES,
Acting Master, Commanding.

Lieutenant-Commander SAMUEL MAGAW,
Commanding Second Division Potomac Flotilla.

Letter from Commodore Harwood, U. S. Navy, commanding Potomac Flotilla, to Lieutenant-Commander Magaw, U. S. Navy, commanding First Division.

NAVY YARD, WASHINGTON, *October 25, 1862.*

SIR: The information I received and communicated to you in reference to the burning of the schooner *Frances Elmor* is confirmed by the master and crew of that vessel who have been released from their imprisonment and have returned to New York.

They say that the party was well armed with pistols and cutlasses and in a fine boat.

The party was commanded by Lieutenant Wood, formerly of the U. S. Navy, and the boat has been represented to me as being one formerly belonging to the *Merrimack*. She is in all probability in the Upper Machodoc or ——— creeks.

Mr. Rollins, who has recently escaped from Richmond and gave me the first information upon the subject, is well acquainted with the creeks and marshes in the vicinity of Mathias, and is anxious to accompany any expedition as guide.

Resistance is to be expected. You will therefore take care to send a sufficient force and to send for the *Eureka* to go into any of the creeks where there is water enough.

It will be discreditable to our vigilance if this boat is allowed to do any more mischief. I therefore hope that with your usual energy you will soon be able to give a good account of her.

Very respectfully, your obedient servant,

ANDW. A. HARWOOD,
Commodore, Commanding Potomac Flotilla.

Lieutenant-Commander SAML. MAGAW,
Commanding First Division Potomac Flotilla.

Report of Commodore Harwood, U. S. Navy, commanding Potomac Flotilla, recommending appointment of Louis N. Rollins, to a position under his command.

COMMANDANT'S OFFICE, NAVY YARD,
Washington, November 3, 1862.

SIR: On the 20th ultimo, Mr. Louis N. Rollins was referred by the Department to me for the purpose of communicating information respecting the movements of certain rebel parties in the neighborhood of Mathias Point.

I found Mr. Rollins well informed, and directed Lieutenant-Commander Magaw to permit him to accompany him for the purpose of pointing out the localities where boats used in the contraband trade and the launch recently used by an armed party to rob and destroy a schooner were hid. The launch, which had been carted over from the Rappahannock, had been taken back in the same way, and that the principal object of the expedition failed. Lieutenant-Commander Magaw, however, writes me that Mr. Rollins would be very useful to him if he could be given a position in the flotilla, such as clerk, which would make his knowledge of the localities available to the Government, and at the same time give him a support.

I beg leave to recommend Mr. Rollins to the further notice of the Department.

I have the honor to be, with great respect, your obedient servant,

[A. A. HARWOOD.]

Hon. GIDEON WELLES,
Secretary of the Navy, Navy Department.

Report of Acting Master Savage, U. S. Navy, commanding U. S. schooner Matthew Vassar, of captures made by that vessel and the destruction of salt works on Rappahannock River.

U. S. SCHOONER MATTHEW VASSAR,
Rappahannock River, October 9, 1862.

SIR: I most respectfully take the liberty of reporting to you that yesterday, when out in the Chesapeake Bay after water, which I was supplied with (300 gallons) from the steamship *Dan Webster* and the bark *Sea Bride*, I afterwards captured a canoe running from Milford Haven to Maryland shore for a cargo of goods, which I will send you the list of part of the things he was to fetch to some of his friends. He likewise has the list of the last cargo that he ran across, which I will enclose in this to you. One of the men, whose name is John Owen, I found on his person $255 in Confederate money, and the other name is Larking Davis, and had $8 of Virginia money. There was nothing in the canoe but a large bag of sweet potatoes. I shall hold them as prisoners until I hear from you, or send them to you if I can get an opportunity.

This morning I observed a large smoke about 6 miles above where I lay when you were down here. I immediately got underway and proceeded up the river, and found it to be a large, extensive salt works, consisting of five large boilers, and attended to by negroes. They informed me that they had made a great quantity of salt, and that their master takes it to Richmond, and that he was at present off with some, to some place. So I destroyed all the boilers and tore the place down.

I remain, very respectfully, your obedient servant,

HUGH H. SAVAGE,
Acting Master, Commanding.

Lieutenant-Commander E. P. MCCREA,
Adjutant Potomac Flotilla.

P. S.—SIR: Permit me to inform you that since I finished my report to you there are four contrabands who came off to me in a canoe, claiming my protection. I have received them until further orders from you, as I have had no orders concerning contrabands.

Very respectfully, your obedient servant,

HUGH H. SAVAGE,
Acting Master, Commanding.

Lieutenant Commanding E. P. MCCREA,
Adjutant Potomac Flotilla.

Report of Commodore Harwood, U. S. Navy, commanding Potomac Flotilla, transmitting report of Lieutenant-Commander Magaw, U. S. Navy, commanding Second Division, regarding destruction of Confederate defenses.

COMMANDANT'S OFFICE, NAVY YARD,
Washington, October 11, 1862.

SIR: I enclose a copy of Lieutenant-Commander Samuel Magaw's weekly report of operations in the river, by which you will perceive that the work of destroying the principal batteries left by the rebels has been accomplished.

The mortar schooner *Matthew Vassar* has taken a canoe furnished with passes from General Lockwood, which appear to be used for contraband purposes.

Acting Master Savage has destroyed in the Rappahannock an extensive salt work, consisting of six large boilers, from which supplies have been sent to Richmond.

I have the honor to be, with great respect, etc.,

ANDREW A. HARWOOD,
Commodore, Commanding Potomac Flotilla.

Hon. GIDEON WELLES,
Secretary of the Navy, Navy Department.

[Enclosure.]

U. S. S. FREEBORN,
Potomac Flotilla, October 11, 1862.

SIR: I respectfully submit my weekly report:

Upper Shipping Point and Cockpit batteries have been completely destroyed, a quantity of rubbish (fragments of wagons, etc.) burned. Cavalry appeared several times, but made no demonstration. At Cockpit two shells (slightly buried and left there by the enemy) exploded, fortunately without accident to us. There are no works at Boyd's Hole, and those at Aquia and Potomac creeks were the defenses of those routes to Richmond.

Mathias Point can be enfiladed by the gunboats; the timber is yet too green to burn readily. I will soon send you the result of a personal examination as to the facilities for transporting heavy guns over the slough, and of its extent.

Everything is quiet. Small bodies of cavalry frequently make their appearance in the vicinity of Mathias Point and Dr. Stewart's. I am not satisfied that the schooner lately burned off White Point was burned by the enemy; the affair is, however, mysterious.

I beg you will direct the guard vessels above and below to order all vessels anchoring in the river to come to on the Maryland side of the channel.

I have the honor to be, your servant,

SAMUEL MAGAW,
Lieutenant-Commander, Second Division.

Commodore A. A. HARWOOD,
Commanding Navy Yard and Potomac Flotilla.

Report of Commodore Harwood, U. S. Navy, commanding Potomac Flotilla, transmitting captured papers.

COMMANDANT'S OFFICE, NAVY YARD,
Washington, October 13, 1862.

SIR: The enclosed papers* were taken from one of the persons intercepted in a canoe by the *Matthew Vassar's* boat, in Chesapeake Bay, off the Rappahannock River. She was going to Maryland for goods. The bill enclosed is for goods carried over in August.

The coast guard pass from General Lockwood and Captain Revere, with other papers, are enclosed to the Department, showing that the prisoner Owen is considered a Union man.

By the bill, also enclosed, I infer he is in the habit of passing from shore to shore, which can not be permitted under your orders to me to observe a strict blockade.

* Not found.

Will the Department please to forward these papers to the proper military authority, that the officers of the Army may be made aware that these passes will not protect from seizure boats or persons, should they be encountered by vessels of the flotilla.

I have the honor to be, with great respect, your obedient servant,

ANDW. A. HARWOOD,
Commodore, Commanding Potomac Flotilla.

Hon. GIDEON WELLES,
Secretary of the Navy, Navy Department.

Letter from the Secretary of the Navy to Commodore Harwood, U. S. Navy, commanding Potomac Flotilla, giving information received from the War and Treasury Departments.

NAVY DEPARTMENT, *October 13, 1862.*

SIR: Commodore Dornin has been instructed to send to Washington, under orders to report to you, the several mortar schooners at Baltimore, as fast as they are ready. To render unnecessary the employment of the river pilots, some of the pilots of the flotilla, or officers thereof, should be in the vicinity of the mouth of the Potomac to pilot the schooners up the river.

The mortar schooners at present in the Potomac you will send around, two by two, to Baltimore for repairs, as the others arrive.

The War Department states that it is unable to furnish the contrabands desired by you to fell the trees on the most prominent points of the Virginia shore to prevent the enemy from erecting batteries.

The Department wrote to the Secretary of the Treasury on receiving your letter of the 4th instant, and asked his attention to your suggestion that the collectors should give notice of extraordinary shipments of goods to the ports on the Maryland side of the Potomac. He informs me in reply that the collectors at Baltimore, Philadelphia, and New York have been directed accordingly.

I am, respectfully, etc.,

GIDEON WELLES,
Secretary of the Navy.

Commodore A. A. HARWOOD,
Commanding Potomac Flotilla.

Report of Commodore Harwood, U. S. Navy, commanding Potomac Flotilla, in response to Department's letter of preceding day.

COMMANDANT'S OFFICE, NAVY YARD,
Washington, October 14, 1862.

SIR: Your letter of the 12th [13th] has been received.

First. I shall be ready to send the mortar schooners, two by two, round to Baltimore as soon as others from that station arrive. The pilots shall be in readiness at the mouth of the river.

Second. I shall not require assistance from the War Department in physical force. Much of the work of destruction proposed has been already accomplished with our own men, and I find there will be very little felling of trees required.

Third. The cooperation of the Treasury Department has already produced very marked effects in checking the contraband trade. I am

informed, however, that a new channel has been opened via Hyattsville and Marlborough. The other six carloads came from Baltimore with goods directed to planters.

The quantity was extraordinary. An entire carload, for instance, to a single individual. It is evident that a large amount of goods may be taken in this way to points where it can be run at favorable times into Virginia.

I have the honor to be, with great respect, your obedient servant,

ANDW. A. HARWOOD,
Commodore, Commanding Potomac Flotilla.

Hon. GIDEON WELLES,
Secretary of the Navy, Navy Department.

Report of Lieutenant-Commander Magaw, U. S. Navy, commanding Second Division Potomac Flotilla, regarding reconnoissance of Mathias Point, Va.

U. S. S. FREEBORN, *October 15, 1862.*

SIR: I respectfully report that I made a careful and satisfactory reconnoissance of Mathias Point this morning.

I find nothing in the way of earthworks but the three old rifle pits built upward of a year ago.

At the head of the slough, or swale, heavy artillery can be transported easily from the mainland to the point, but in battery it can be enfiladed, as per sketch.*

It would be well to burn the timber on the point, and I beg your order to do so when the opportunity presents.

I have the honor to be, your servant,

SAMUEL MAGAW,
Lieutenant-Commander.

Commodore A. A. HARWOOD,
Commanding Flotilla.

Report of Commodore Harwood, U. S. Navy, commanding Potomac Flotilla, transmitting copy of certificate of capture by U. S. steamers Thomas Freeborn and Eureka.

COMMANDANT'S OFFICE, NAVY YARD,
Washington, October 16, 1862.

SIR: The *Satellite* arrived here this morning with goods, a copy of certificate of the capture of which is herewith enclosed. She brought up also a person by the name of Goldsmidt, who appears, by the bills taken with him, to be one of the persons engaged in running goods from Baltimore to Virginia.

The usual disposal will be made of the goods and prisoner as soon as the papers can be arranged, which the law requires to be deposited with the district court.

I have the honor to be, with great respect, your obedient servant,

ANDREW A. HARWOOD,
Commodore, Commanding Potomac Flotilla.

Hon. GIDEON WELLES,
Secretary of the Navy.

---

* Not found.

[Enclosure.]

Potomac Flotilla.—Certificate of capture.

Name and character of the prize.—One yawl boat.

By whom and by what vessel capture made.—Boats belonging to steamers *Freeborn* and *Eureka.*

When capture made.—October 12.

Where and for what reasons.—Having been found abandoned on the Maryland shore, near Blossom Point.

The cargo, if any on board.—Merchandise.

What papers found.—None of importance save two bills of goods bought by L. Goldsmidt and three letters.

Remarks.—One prisoner named Leon Goldsmidt was arrested near the spot where the goods were found under suspicious circumstances, not being able to give an account of himself, to state why he was there, and is probably one of the owners. The boat was destroyed, being of no value.

OCTOBER 13, 186[2.]

I hereby certify that the above-mentioned merchandise was captured by the undersigned, commanding the U. S. steamers *Freeborn* and *Eureka*, of the Potomac Flotilla, at the time and place above designated, and the above and annexed statement is true in every particular.

JAMES L. PLUNKETT,
Acting Master, U. S. S. Freeborn.

Order of Commodore Harwood, U. S. Navy, commanding Potomac Flotilla, to Lieutenant-Commander McCrea, U. S. Navy, commanding U. S. S. Jacob Bell, regarding schooner Mary Elizabeth.

NAVY YARD, WASHINGTON, *October 16, 1862.*

SIR: I have received information that the schooner *Mary Elizabeth* sailed on the 15th instant for Leonardtown and St. Clement's Bay, with a cargo of whisky, dry goods, boots and shoes, and some passengers.

Look well to her cargo and permit.

Very respectfully, your obedient servant,

ANDW. A. HARWOOD,
Commodore, Commanding Potomac Flotilla.

Lieutenant-Commander E. P. MCCREA,
Adjutant, etc.

Report of Lieutenant-Commander McCrea, U. S. Navy, commanding Second Division Potomac Flotilla, of affairs on the lower Potomac.

U. S. S. JACOB BELL, POTOMAC FLOTILLA,
Piney Point, October 17, 1862.

SIR: I arrived at this port at 1 a. m. this day, and found at anchor the *Resolute*, coaling up. Knowing the necessity of coal at the yard I send her up, towing a vessel consigned to you. Should you not need her at present, please order her to return to her station (reporting to me).

I would suggest the transfer of, say, 30 men from the *Currituck* to the *Anacostia*, and that the latter take the place of the former as guard ship, and the former going to the yard for repairs, as soon as you can receive her.

I enclose duplicate lists of refugees captured crossing from Virginia to Maryland in violation of the blockade. I leave this evening in person with two launches to capture another *Merrimack* launch, if she comes out. No mortar schooners have as yet arrived from Baltimore to relieve those now in the river. I would recommend a requisition upon the Coast Survey for the last surveys of Potomac River to Piankatank, etc., and the Rappahannock rivers.

I enclose three passports and two letters taken from the refugees for your disposition.

Everything is quiet so far as regards the enemy. I would suggest the removal of the refugees from St. George's Island and all boats destroyed, save those belonging to the pilots, and only one allowed to each. I have reason to believe they engage in illegal traffic. I shall do so upon your order immediately.

Very respectfully, your obedient servant,

E. P. McCREA,
Lieutenant-Commander, Second Division Potomac Flotilla, and Adjutant Potomac Flotilla.

Commodore A. A. HARWOOD,
Commanding Potomac Flotilla.

Report of Acting Volunteer Lieutenant Hays, U. S. Navy, commanding U. S. S. Satellite, regarding refugee from Blakistone Island.

U. S. S. SATELLITE,
Potomac Flotilla, October 19, 1862.

SIR: I respectfully beg leave to make report of the taking of a man from Blakistone Island at this above date, giving his name as William Marmaduke, from Westmoreland County, Va. He says he left Virginia in a small skiff and came to Blakistone Island in order to get North, as he could not remain in Virginia without being drafted for the Confederate Army. Under these circumstances I took him on board and forward him to you.

Sir, I am, very respectfully, your obedient servant,

PETER HAYS,
Acting Volunteer Lieutenant, Commanding Satellite.

Commodore A. A. HARWOOOD,
Commanding Navy Yard and Potomac Flotilla.

Report of Commodore Harwood, U. S. Navy, commanding Potomac Flotilla, regarding capture of metallic life boat C. F. Ward.

COMMANDANT'S OFFICE, NAVY YARD,
Washington, October 20, 1862.

SIR: I beg leave to enclose the duplicate certificate of capture by the flotilla of a metallic life boat called the *C. F. Ward*, containing a quantity of goods and a number of letters.

The part owner of this vessel, Mr. C. F. Ward, was arrested, and appears to be one of the regular contrabandists and mail carriers between Richmond and Baltimore. I have placed him in charge of the provost-marshal.

I beg leave to draw your attention to the fact that Ward is the second person recently arrested by the flotilla in the act of carrying correspondence between the loyal States and their enemies. The correspondence is full of treasonable sentiments, and although there does not appear to be any attempt to give military information, there is no reason to suppose that it may not be done, the usual precautions of concealment being observed.

If it were generally understood that these traders and mail carriers would be, when caught, punished as spies, an immediate stop would be put to their operations, which are by no means harmless. If the Department agrees with me in this opinion, may I request that the notice of the War Department may be drawn to the subject, and that some warning may be given by proclamation, that ignorant men may not embark in a business which will put their lives in jeopardy.

I should like to be informed in whose hands the intercepted letters should be placed. They contain no information in relation to the prize goods that is required for their condemnation in the courts, but some of importance as to the persons furnishing the goods in Baltimore, and exhibiting the temper of the people of Maryland in disloyal districts.

I have the honor to be, with great respect, your obedient servant,

ANDW. A. HARWOOD,
Commodore, Commanding Potomac Flotilla.

Hon. GIDEON WELLES,
Secretary of the Navy, Navy Department.

[Endorsement.]

It would be well for the officer of the flotilla to send evidence in each case of arrest; also to carefully discriminate, so as not to do injustice to innocent parties.

Intercepted letters send to Department.

W[ELLES.]

[Enclosure.]

Potomac Flotilla.—Certificate of capture.

Name and character of prize.—[*C. F. Ward*], Francis metallic life boat.

By whom and by what vessel capture made.—Acting Master W. T. Street, U. S. S. *Jacob Bell.*

When capture made.—October 17, 1862, at 11:40 p. m.

Where and for what reasons.—At Jackson's Creek, Va., for violating the blockade, namely, passing from Maryland to Virginia with goods.

The cargo, if any on board.—One box or 14 dozen H skirts, 4 boxes of coffee, 1 case of shoes, 3 boxes candles, 2 bundles of cloth, 1 case of shoes, 1 case of shoes, 24 pair of boots, 24 pair of boots, 60 pair ladies' shoes, 1 case of prints, 1 case felt hats, 1 case of B cotton, 1 sack of Java coffee, 1 sack of Rio coffee, 1 box castile soap, 1 case of liquor, 1 carpet bag, 1 valise.

What papers found.—Sixteen letters.

Remarks.—Receiving information that a boat with three men were to cross the Potomac from Maryland to Virginia on the night of the 17th instant, started with a boat's crew of 7 men and Mr. A. Bentley, third assistant engineer, proceeded to the above creek to await the boat's

approach. At 11:40 p. m. the boat came in sight, not coming in the creek, as anticipated, but landed about 100 yards above. Not being able to approach the boat in time, two men that were hired to row the boat made their escape, but captured the boat, goods, and part owner of the goods, Mr. C. F. Ward.

U. S. S. JACOB BELL, *October 18, 1862.*

I hereby certify that the above-mentioned C. F. Ward, boat, and goods were captured by the undersigned, commanding the gig of the U. S. S. *Jacob Bell*, of the Potomac Flotilla, at the time and place above designated, and that the above and annexed statement is true in every particular.

WM. T. STREET,
Acting Master.

Report of Commodore Harwood, U. S. Navy, commanding Potomac Flotilla, of arrival of refugees at Washington navy yard.

POTOMAC FLOTILLA,
COMMANDANT'S OFFICE, NAVY YARD,
Washington, October 20, 1862.

SIR: The following-named persons, representing themselves as refugees, were sent up from the lower Potomac by the flotilla:

R. Cully, Isaac N. Neal, J. Campbell, whites; William Ashton, colored.

The white men all had passes from the rebel military authorities from Richmond to Hanover, to obtain which they swore allegiance to the so-called Confederate States.

These men have been delivered into the custody of the provost-marshal.

I have the honor to be, with great respect, your obedient servant,

ANDW. A. HARWOOD,
Commodore, Commanding Potomac Flotilla.

Hon. GIDEON WELLES,
Secretary of the Navy.

Report of Acting Master Wright, U. S. Navy, commanding U. S. schooner Arletta, regarding a boat expedition to Freestone Point.

U. S. SCHOONER ARLETTA,
Alexandria, October 20, 1862.

SIR: In conformity with the object which I communicated to you on the 18th instant, I left this vessel early on the evening of the same day with an armed boat's crew, and, with the first cutter in tow of the tug *Teaser*, steamed down the river. At 9:30 p. m. anchored close under Freestone Point and immediately pushed up Neabsco Creek. The night being intensely dark, and my information not explicit as to the landing place of the smugglers, I had to search the reeds and tussocks on both sides the creek, thus losing much valuable time. At the distance of about three-fourths of a mile from the entrance I had the satisfaction of finding the boat of which [I was] in search, and another, which I was told had been employed for some time past in running mail matter across the river.

A short distance above this place were some 60 cords of recently cut firewood, piled at the water's edge, with evidences of having been much more within a short time. Near by was a large boat of about 10 tons, which, as it was low tide, I could not take away. I destroyed her by cutting through her keel and boat gunwales.

Having accomplished the object for which I started, I took the small boats in tow to the tug and returned to this vessel.

Hoping this may meet your approbation,

I am, sir, very respectfully, your obedient servant,

W. G. WRIGHT,
Acting Master, Commanding Arletta.

Commodore ANDREW A. HARWOOD,
Commanding Potomac Flotilla, Washington, D. C.

General weekly report of Lieutenant-Commander McCrea, U. S. Navy, commanding Second Division Potomac Flotilla, referring to steamer Keyport.

U. S. S. JACOB BELL,
Potomac Flotilla, October [20], 1862.

SIR: I respectfully submit the following report:

During the last week I have been in St. Mary's and Wicomico rivers, but found nothing worthy of note. Last night I made capture of some goods and the owner, F. J. Allston. I forward them with this dispatch. They were captured on shore, just pushing off at Floods Creek. I have the horse and wagon that brought the goods and men at Piney Point, subject to your order. The contracts with Mr. Plowden were signed to-day. I submit them to you for your approval.

Your dispatch of the 16th instant was received on the 18th instant per *Satellite*. The vessel had been passed by the guard ship, her papers being correct. I have transferred 5 men to *Reliance*, 5 to *Teaser*, and 3 to *Resolute* from the *Currituck*, she having many to spare, those vessels being very short-handed. I would bring the matter of the *Keyport*, steamer, to your notice. She runs between Baltimore and Washington, carries passengers, etc., runs into Breton's Bay, and, in my opinion, gives aid to those persons hostile to the Government on the Maryland shore. I would suggest a prohibition to all ports [boats] to trade on the Maryland shore on the Potomac River. I would state that great quantities of goods come via the Patuxent River, landed principally at Millstone Landing, no vessels being there, or ever have been (save this vessel last year). The river is open to all vessels from Baltimore.

A cavalry force would be of great service on the shores of the Potomac, or rather at the principal trading towns, Port Tobacco, Leonardtown, Chaptico, Great Mills, Millstone Landing, and generally patrolling the country. I have had no opportunity since the receipt of your enclosures to attend to the so-called robbery of the *Mary Jane* in the Leonardtown Bay, but will at the moment I can leave Breton's Bay. The *Currituck* is still guard ship; the *Teaser* relieved the *Reliance* to-day, cruising between Blakistone Island and Blake's Landing; *Matthew Vassar*, off Herring and Floods creeks to Piney Point. The *Reliance* needs repair badly. The *Wyandank* is stationed in the Wicomico River as storeship. I would request permission to exchange a master's mate with her. I propose you will order the surgeon of this vessel to her, and make her a hospital ship, also having well-covered decks for the

sick, previous to their transfer to the yard. Regarding vessels laden with salt, bound to Washington with legal passes, I send you the names of consignees and shippers for your guidance.

I have been unable to examine Acting Master's Mate Richards, agreeably to your order, for promotion to acting ensign as yet, and have none around me capable of so doing.

The mortar schooner *T. A. Ward* is in the Rappahannock; no relief to the mortar vessels now here has as yet arrived from Baltimore.

Very respectfully, your obedient servant,

E. P. McCREA,
Lieutenant-Commander and Adjutant.

Commodore A. A. HARWOOD,
Commanding Potomac Flotilla.

OCTOBER 21, 1862.

SIR: Since writing the above I have fallen in with the *Keyport* and *Dragon*. The latter vessel brought your dispatches of the 20th instant. I have sent her to carry out your instructions of October 18, addressed to her commanding officer.

I had an interview with Captain Stackpole, of the *Keyport*, and examined his papers. His charter by the Government permits him to carry private freight and passengers and to charge a legal price. He can not carry sutler's stores, nor can any quartermaster order it to be done, is a clause in the charter. I have found that a quartermaster at Point Lookout has taken advantage of his position (according to Captain Stackpole's belief). I forward you a copy of his (the quartermaster's) order. Captain S. thinks they are sutler's goods. The *Keyport* I passed; she brought no whisky from Baltimore, so Captain S. says; he took it off his vessel before leaving, there being some doubts of his being allowed to pass the guard ship. I have changed my opinion regarding her, upon a strict investigation, and she is legally passing to and fro. She is examined and passed like other vessels. I should like to know if passengers upon any vessel must be furnished with a pass from some proper authority, or only the number of passengers entered upon the manifest; it is not understood correctly.

MATHIAS POINT, *October 21, 1862—7 p. m.*

SIR: I arrived this evening at 6 p. m. and communicated with Lieutenant-Commander Magaw. Wishing to see you, he leaves at daylight for the yard. I transfer prisoner, goods, and dispatches to him for delivery.

Very respectfully, your obedient servant,

E. P. McCREA,
Lieutenant-Commander and Adjutant.

Commodore A. A. HARWOOD,
Commanding Potomac Flotilla.

General instructions from Commodore Harwood, U. S. Navy, commanding Potomac Flotilla, to Lieutenant-Commander Magaw, U. S. Navy, commanding First Division.

NAVY YARD, WASHINGTON, *October 21, 1862.*

SIR: I have directed the *Cœur de Lion* to resume her station, and hope she will prove of use to you.

I have a report, which I have reason to think is reliable, that considerable contraband operations are going on in our neighborhood.

The large schooner loaded with hay, recently reported as having been burned by Acting Master Ives, of the *Yankee*, was burned by the rebels, and the crew, consisting of nine men, was sent to Richmond.

My informant had seen some of the men employed in transporting the goods and crew.

They were carried over to Smoot's wharf, on the Rappahannock, about 2 miles below Leedstown, and thence to Richmond. The railroad is now completed between Fredericksburg and Richmond. You will perceive by this that it is important to prevent supplies and recruits from being brought across the river, and that much facility is afforded in forwarding supplies if the enemy or his traitorous friends on the Maryland shore can succeed in eluding your vigilance.

It is said that one of the *Merrimack's* boats has been brought across on wheels from the Rappahannock, and that she is concealed either in the Upper Machodoc or Rosier's creeks, or in a small creek called Gambo [Gamble's ?], about 3 miles above the Machodoc, and navigable only for boats.

There is a picket guard on Bluff Point, and there may be one on the Machodoc, and the report is that the pickets will be extended from Mathias Point down to Monroe's Creek, and even as far as Mattox.

I wish you to endeavor to find out, if possible, where the boats used in crossing from the Virginia shore are concealed, and that you would send in and destroy them.

As you may probably meet with resistance, if the draft of water will permit you had better employ the *Eureka*.

You are authorized to send for that vessel and to look into the creeks or not, as you may deem expedient.

At all events make your division keep on the alert to prevent the crossing from the Maryland shore.

Very respectfully, your obedient servant,

ANDW. A. HARWOOD,
Commodore, Commanding Potomac Flotilla.

Lieutenant-Commander SAML. MAGAW,
Commanding First Division Potomac Flotilla.

Report of Acting Volunteer Lieutenant Hays, U. S. Navy, commanding U. S. S. Satellite, of the loss of Andrew Crane, of that vessel.

U. S. S. SATELLITE,
Potomac Flotilla, October 21, 1862.

SIR: I most respectfully beg leave to make report of the loss of one of my men this day. I sent my boats, in company with those of the *Freeborn* and *Yankee*, on shore at Mathias Point, for the purpose of destroying the woods and rifle pits there; my men, with others, were placed on picket. When they were called in, one man by the name of Andrew Crane was missing. He is supposed to have been taken prisoner, as rebel cavalry are known to have been in the vicinity during the day.

Sir, I am, most respectfully, your obedient servant,

P. HAYS,
Volunteer Lieutenant, Commanding Satellite.

Commodore A. A. HARWOOD,
Comdg. Navy Yard and Potomac Flotilla, Washington, D. C.

[Endorsement.]

This man appears to have been lost through his own disobedience of orders, having strayed from his station as picket. He was a landsman.

Respectfully,

SAMUEL MAGAW,
Lieutenant-Commander.

Report of Commodore Harwood, U. S. Navy, commanding Potomac Flotilla, transmitting duplicate certificates of capture.

COMMANDANT'S OFFICE, NAVY YARD,
Washington, October 22, 1862.

SIR: I enclose four duplicate certificates of captures made recently by the Potomac Flotilla by the *Teaser*, *Yankee*, *William Bacon*, and *Eureka*.

The following persons have been placed in custody of the provost-marshal:

F. J. Allston (Virginian), taken with contraband goods and letters for Richmond.

Jacob Biscoe (colored).

Robert Lacey, James Lacey, Hugh Mitchell, late of the rebel Army.

John Mitchell.

William Marmaduke, refugee from Virginia.

Four black men and two women, refugees.

I have the honor to be, with great respect, your obedient servant,

ANDW. A. HARWOOD,
Commodore, Commanding Potomac Flotilla.

Hon. GIDEON WELLES,
Secretary of the Navy.

[Enclosures.]

Potomac Flotilla.—Certificate of capture.

Name and character of the prize.—Canoe, F. J. Allston and Jacob Biscoe (colored).

By whom and by what vessel capture made.—U. S. S. *Teaser*; Acting Master W. T. Street and Acting Ensign P. Sheridan.

When capture made.—October 19, 1862, at 8:30 p. m.

Where and for what reason.—At Herring Creek, Md., for attempting to pass from Maryland to Virginia with goods.

The cargo, if any on board.—Two boxes shoes, 1 box ladies' shoes, 2 boxes dry goods, 1 bundle, 1 carpet bag.

What papers found.—Ten letters.

Remarks.—Receiving information that a boat was to cross the Potomac from Herring Creek, Maryland, to Virginia, with goods, on the night of the 19th instant, I was ordered by Lieutenant-Commander E. P. McCrea to go on board the *Teaser* and proceed to the above creek; arriving in time to see the boat coming out with a negro in charge but no goods. Ordered him to come on shore, when he stated that a wagon filled with goods was waiting for him about 1½ miles up the beach, and that one of the men that were to cross had just left the canoe as we came in sight. Securing the canoe and taking the negro with us proceeded to the landing, where we found the wagon and goods with two men, one of whom made his escape, but succeeded in capturing the other, Mr. F. J. Allston, with goods.

U. S. S. JACOB BELL, *October 20, 1862.*

I hereby certify that the above-mentioned F. J. Allston and Jacob Biscoe (colored) with crew and goods were captured by the undersigned on board U. S. S. *Teaser*, of the Potomac Flotilla, at the time and place above designated, and that the above and annexed statement is true in every particular.

W. T. STREET,
Acting Master, Executive Officer of the Jacob Bell,
Senior Officer on board U. S. S. Teaser.

E. P. MCCREA,
Lieutenant-Commander, Second Division.

Potomac Flotilla.—Certificate of capture.

Name and character of the prize.—One canoe.

By whom and by what vessel capture made.—Charles P. Moore, acting master's mate, in charge of the guard boat from the *Yankee.*

When capture made.—Evening of October 18, 1862.

Where and for what reasons.—Off Nanjemoy Creek, one-third of the way over from the Maryland shore. Because attempting to run the blockade.

The cargo, if any on board.—None.

What papers found.—One letter.

Remarks.—There were four men in the canoe, viz, Hugh Mitchell, John Mitchell, James Lacey, Robert Lacey. The party were attempting to get into Virginia. Hugh Mitchell has been in the rebel Army.

I hereby certify that the above-mentioned canoe and men were captured by the undersigned, commanding the U. S. S. *Yankee*, of the Potomac Flotilla, at the time and place above designated, and that the above and annexed statement is true in every particular.

THOS. POYNTON IVES,
Commanding Yankee.

Potomac Flotilla.—Certificate of capture.

Name and character of the prize.—Eight boxes of merchandise, assorted, to wit: One box marked ⟨P⟩, 1 box [marked] I. S. G., 1 box [marked] R. B. Griffin, 1 box [marked] G., 1 box marked ⟨D⟩ (fever and ague cure), 3 boxes mustard.

By whom and by what vessel capture made.—William P. Rogers, U. S. schooner *William Bacon*, Potomac Flotilla.

When capture made.—October 14, 1862, at 7 p. m.

Where and for what reasons.—Being contraband goods, hid away for the purpose of running across to Virginia, concealed on the bank of Neal's Creek [Sound], behind a brush fence, covered with brush.

The cargo, if any on board.—None.

What papers found.—None.

Remarks.—These goods are without doubt hid away by a boat or boats hard pushed and pursued by some of the flotilla in the first of the blockade, they coming into the creek and unlading and concealing them and going to another part of the creek with the boats. There were some empty boats found and destroyed in the creek, I have been

informed, and perhaps may have been the same ones that hid their goods. One George H. Jennings, the present occupant of the land where the goods were found, informed me of the goods being concealed, and that he had found them while searching for some stray pigs, and he informed me of it for fear they might be found on his place and implicate him. It is my opinion that the goods have been concealed for five or six weeks. Things about the place had that appearance.

U. S. SCHOONER WILLIAM BACON,
Kettle Bottom Station, October 14, 1862.

I hereby certify that the above-mentioned goods were found concealed on the west bank of Neal's Creek [Sound], Charles County, Md.; were captured by the undersigned, commanding the U. S. mortar schooner *William Bacon*, No. 7 of the Potomac Flotilla, at the time and place above designated, and that the above and annexed statement is true in every particular.

WM. P. ROGERS,
Acting Master, Commanding.

Potomac Flotilla.—Certificate of capture.

Name and character of the prize.—Lady Washington (yawl boat).
By whom and by what vessel capture made.—J. J. Brice, U. S. S. *Eureka.*
When capture made.—October 17, 1862.
Where and for what reasons.—In Mattawoman Creek, concealed in marsh and being abandoned.
The cargo, if any on board.—None.
What papers found.—No papers.
Remarks.—Found concealed two trunks in corn shock near the boat abandoned. The name T. R. Bateman, Port Tobacco, printed on one of the trunks.

OCTOBER 20, 1862.

I hereby certify that the above-mentioned yawl boat was captured by the undersigned, commanding the U. S. S. *Eureka*, of the Potomac Flotilla, at the time and place above designated, and that the above and annexed statement is true in every particular.

J. J. BRICE,
Acting Ensign.

Report of Commodore Harwood, U. S. Navy, commanding Potomac Flotilla, urging measures for the suppression of illegal traffic.

POTOMAC FLOTILLA,
COMMANDANT'S OFFICE, NAVY YARD,
Washington, October 25, 1862.

SIR: Permit me to inform the Department that great quantities of goods pass up the Patuxent River and are landed principally at Millstone Landing, and that no vessels of war are now, or have been, there except the *Jacob Bell* (last year). The Patuxent is open to all vessels trading from Baltimore.

A cavalry force would be now of great service at the principal trading towns, such as Port Tobacco, Leonardtown, Chaptico, Great Mills, and Millstone Landing. The force should be commanded by a strict and efficient officer, who should patrol the surrounding country.

I understand that the military department in that section of the country is under the command of General Wool.

I have the honor to be, with great respect, your obedient servant,

ANDREW A. HARWOOD,
Commodore, Commanding Potomac Flotilla.

Hon. GIDEON WELLES,
Secretary of the Navy, Navy Department.

Report of Acting Master Savage, U. S. Navy, commanding U. S. schooner Matthew Vassar, regarding capture of six men and two boats.

POTOMAC FLOTILLA,
U. S. Schooner Matthew Vassar, October 25, 1862.

SIR: The following is a report of the capture of six prisoners and two boats. Yesterday afternoon I sighted a boat going on shore containing three men. I immediately sent a boat in chase and succeeded in capturing the boat, but no cargo in her. The three men succeeded in making their escape in the woods.

Last night my guard boat captured six men in the act of going to the Virginia shore. They had paid their passage to a man [of] the name of Morris. He was to take them over, but before they got in the boat my men captured them. There were nine of them in all, but three of them made their escape. Those six, when brought on board, I carefully searched and found on them a quantity of letters, which I will forward to you, and a small quantity of medicines, and nine boxes of toothbrushes; all of these things I will forward by the U. S. S. *Resolute.* After delivering the prisoners to me I immediately sent my boat in pursuit of the boat that these people were going to Virginia in and they succeeded in capturing her, but no cargo in her. Sir, I wish to report to you that these men all allow that they intend to join the Southern Army, and that they had two bottles of whisky, which my men noticed them putting in a drug, and then invited them to drink of it, which they refused, but destroyed the liquor.

Most respectfully, your obedient servant,

HUGH H. SAVAGE,
Acting Master, Commanding.

Lieutenant Commanding E. P. MCCREA,
Adjutant Potomac Flotilla.

Report of Commodore Harwood, U. S. Navy, commanding Potomac Flotilla, transmitting certificate of capture made by U. S. S. Eureka.

POTOMAC FLOTILLA,
COMMANDANT'S OFFICE, NAVY YARD,
Washington, October 27, 1862.

SIR: I enclose a certificate of capture by the *Eureka.* The prisoners will be sent to the provost-marshal this morning.

I have the honor to be, with great respect, your obedient servant,

ANDW. A. HARWOOD,
Commodore, Commanding Potomac Flotilla.

Hon. GIDEON WELLES,
Secretary of the Navy.

[Enclosure.]

Potomac Flotilla.—Certificate of capture.

Name and character of the prize.—One boat, no name; worthless, and destroyed.

By whom and by what vessel capture made.—[Acting Ensign] J. J. Brice, U. S. S. *Eureka.*

When capture made.—October 24, 1862.

Where and for what reasons.—At Nanjemoy Creek; running blockade.

The cargo, if any on board.—One trunk; carpetbag.

What papers found.—[None.]

Remarks.—The boat being unfit for use I destroyed it. Three persons were taken in the boat, viz, Thomas C. Hutchinson (white), Phil. Lucas, and William Lucas (colored). The trunk contained but two or three articles of clothing. The carpetbag also contained clothing.

OCTOBER 24, 1862.

I hereby certify that the above-mentioned prisoners and articles were captured by the undersigned, commanding the U. S. S. *Eureka*, of the Potomac Flotilla, at the time and place above designated, and that the above and annexed statement is true in every particular.

J. J. BRICE,
Acting Ensign.

Report of Commodore Harwood, U. S. Navy, commanding Potomac Flotilla, transmitting certificate of capture.

POTOMAC FLOTILLA,
COMMANDANT'S OFFICE, NAVY YARD,
Washington, October 28, 1862.

SIR: I forward to-day another certificate of capture by the boats of the *Matthew Vassar.*

The prisoners, which I have as usual placed in the custody of the military authorities of the district, were apparently going across to Virginia to join the rebel Army. One of them at least had already been in it, as appears by his discharge and pass, which have been forwarded to General Wadsworth.

Among the letters seized on the occasion were two which show that rebel emissaries are busy on both sides of the water, and that there is a pressing necessity for a cavalry force in Charles and St. Mary's counties, Md.

Transient visits by the military force do but little good; they should be continually on the move, with all the information which the detective force can forward, to enable them to arrest the agents of the rebel States.

I have the honor to be, with great respect, your obedient servant,

ANDW. A. HARWOOD,
Commodore, Commanding Potomac Flotilla.

Hon. GIDEON WELLES,
Secretary of the Navy.

[Enclosure.]

Potomac Flotilla.—Certificate of capture.

Name and character of prize.—Two small boats.

By whom and by what vessel capture made.—Acting Master Commanding H. H. Savage, U. S. schooner *Matthew Vassar.*

When capture made.—October 24.

Where and for what reasons.—Transporting rebels from Maryland to join the rebel Army.

The cargo, if any on board.—None.

What papers found.—Private letters.

Remarks.—Captured six prisoners in the act of rowing to Virginia to join the so-called Confederate Army. Two of these men originally belonged to the rebel Army. R. B. Dorsey, belonged to Stonewall Jackson's division. Augustus Howell, thirteen months in the rebel Army. On R. B. Dorsey's person found nine small boxes of tooth-brushes and one-half pound of opium, with other small quantities of medicines. Picked up a quantity of letters in the water, that some of the party tried to destroy, which I will forward to senior officer. List of prisoners' names: J. T. Swann, R. B. Dorsey, Thomas Hanon, Frank Thornton, Augustus Howell, J. H. Parsons.

U. S. SCHOONER MATTHEW VASSAR, *October 24, 1862.*

I hereby certify that the above-mentioned boats and prisoners were captured by the undersigned, commanding the U. S. mortar schooner *Matthew Vassar*, of the Potomac Flotilla, at the time and place above designated, and that the above and annexed statement is true in every particular.

H. H. SAVAGE,
Acting Master, Commanding.

Report of Commodore Harwood, U. S. Navy, commanding Potomac Flotilla, transmitting certificates of captures made by U. S. schooner William Bacon and U. S. S. Eureka.

POTOMAC FLOTILLA,
COMMANDANT'S OFFICE, NAVY YARD,
Washington, October 30, 1862.

SIR: I enclose two certificates of capture, one by the U. S. schooner *William Bacon*, on the night of the 22d instant, and the other by the *Eureka*, on the 27th instant.

The prisoner, Nicholas Porter, has been sent to the provost-marshal.

I have the honor to be, with great respect, your obedient servant,

ANDW. A. HARWOOD,
Commodore, Commanding Potomac Flotilla.

Hon. GIDEON WELLES,
Secretary of the Navy.

[Enclosures.]

Potomac Flotilla.—Certificate of capture.

Name and character of prize.—One boat, no name; destroyed. One prisoner, Nicholas Porter, who claims to belong in Talbot County, Md.

By whom and by what vessel capture made.—William P. Rogers, U. S. schooner *William Bacon.*

When capture made.—Night of October 22, 1862.

Where and for what reasons.—In Charleston Creek, Maryland, being contraband goods on the way over to Virginia.

The cargo, if any on board.—Two barrels of whisky, 5 boxes of goods marked T., 3 packages of woolen cloth, 1 of cotton cloth, 1 package of wadding.

What papers found.—One paper, having the appearance of the heading of a letter, found in one of the packages of cloth, which is enclosed herein.

Remarks.—A portion of these goods was found concealed near the head of Charleston Creek, the prisoner Porter having said there were goods there that belonged to the same lot, all of which belonged to a man by the name of John Thomas, who was going to transport them over to Cuckold Creek and run them over to Virginia. This Porter admits, who says he was hired by Thomas to help get the goods across from Chaptico to Cuckold Creek, and that he has no interest or share in the goods, and was persuaded to help him in order to make something, as he was poorly off.

I hereby certify that the above statements are true in every respect.

CHAS. D. THOMPSON,
Acting Master's Mate.

U. S. SCHOONER WILLIAM BACON,
Kettle Bottom, October 26, 1862.

I hereby certify that the above-mentioned boat, goods, and prisoner were captured by the undersigned, commanding the U. S. mortar schooner *William Bacon*, of the Potomac Flotilla, at the time and place above designated, and that the above and annexed statement is true in every particular.

WM. P. ROGERS,
Acting Master, Commanding.

Potomac Flotilla.—Certificate of capture.

Name and character of prize.—Merchandise.

By whom and by what vessel capture made.—J. J. Brice, U. S. S. *Eureka.*

When capture made.—October 27, 1862.

Where and for what reasons.—On premises of Mr. Oliver, at Blossom Point, for being secreted in corncrib, he not knowing or claiming any knowledge of them.

The cargo, if any on board.—None.

What papers found.—None.

Remarks.—These articles were abandoned by owner, viz: One carpet sack and bag containing clothing and clothes.

OCTOBER 27, 1862.

I hereby certify that the above-mentioned articles were captured by the undersigned, commanding the U. S. S. *Eureka*, of the Potomac Flotilla, at the time and place above designated, and that the above and annexed statement is true in every particular.

J. J. BRICE,
Acting Ensign.

The burning of the ship Alleghanian by a party of Confederates under Lieutenant Wood, C. S. Navy, October 29, 1862.

Report of Acting Master Provost, U. S. Navy, commanding U. S. S. Anacostia.

U. S. S. ANACOSTIA,
Piney Point, Potomac River, October 29, 1862.

SIR: I have the honor to state that I am in receipt of information to this effect, from Captain J. H. Belham, of the steamer *Daniel Webster:* That he picked up a boat containing ten men, about 5 miles below Smith's Point. These men stated that they belonged to the *Alleghanian,*

of New York, 1,400 tons burden, with guano, for London, and from Baltimore, with pilot on board; that their vessel came to anchor in the Chesapeake Bay, about 20 miles off the mouth of the Rappahannock; and between the hours of 10 and 12 o'clock p. m. they were boarded by four boats, containing about twenty-five men, and that these men lowered their boats and ordered them into them, with the exception of the captain, first officer, and pilot, whom they took in their boats with them, setting the ship on fire. The vessel now lies in the same place at anchor with her mizzenmast gone, together with the cabin, leaving the after part of the hull, a mere shell, to within about 6 feet of the water line. She is now in charge of a schooner, supposed to be a mortar schooner. The captain of the *Daniel Webster* requesting advice as to what disposition he should make of the ten men, I told him to carry them with him to Alexandria, there place them on some United States vessel to be forwarded to the Washington navy yard without delay. The captured men stated that they were seized and bound by their captors and placed in the boats; but, as I am informed by the captain of the *Daniel Webster*, they were all well-dressed, and some even had their bags with them. I regarded it as a suspicious circumstance, and ordered them to be conveyed to Washington as prisoners. Their names are as follows: J. J. Barstow, captain; H. Williams, mate; I. Pate, pilot, are missing, reported taken by the rebels. The following are the names of the ten men now on board the *Daniel Webster:* Thomas Paston, Richard E. Roberts, John Kane, James Wise, Robert Harrison, James G. McDonald, James Gibbarr, Michael McDonald, Michael Howard, James Sword.

I am, very respectfully, your obedient servant,

NELSON PROVOST,
Acting Master, Commanding.

Commodore A. A. HARWOOD,
Commanding Potomac Flotilla.

Order of the Secretary of the Navy to Commodore Harwood, U. S. Navy, commanding Potomac Flotilla, to investigate the burning of the ship Alleghanian.

NAVY DEPARTMENT, *November 1, 1862.*

SIR: You will cause an investigation of the circumstances connected with the burning of the vessel off the Rappahannock a few nights since, and communicate the result to the Department in writing.

I am, respectfully, your obedient servant,

GIDEON WELLES,
Secretary of the Navy.

Commodore A. A. HARWOOD,
Commanding Potomac Flotilla, etc., Washington, D. C

Report of Commodore Harwood, U. S. Navy, commanding Potomac Flotilla, transmitting report and statement relative to the burning of the ship Alleghanian.

COMMANDANT'S OFFICE, NAVY YARD,
Washington, November 5, 1862.

SIR: As soon as practicable after hearing the report that a vessel had been boarded and set on fire in Chesapeake Bay near the mouth of the Rappahannock, I dispatched Lieutenant-Commander McCrea in the *Ella* to make the enquiry subsequently called for by your order of the 1st instant.

I enclose for the information of the Department the copy of a report received last evening from Acting Master W. L. Babcock, commanding the mortar schooner *T. A. Ward*, who assisted in saving the *Alleghanian* from being entirely consumed.

I also enclose the statement of James L. Jackson, one of the crew of the *Alleghanian*, at present in custody in this yard, which statement was taken down by me personally, and from the straightforward and unembarrassed manner of Jackson in telling his story, and the corroborative evidence of Acting Master Babcock, I think there is no cause whatever to suspect foul play on the part of the crew of the ship in question.

It appears to me, however, proper to remark that there does not seem to have been proper vigilance, or such preparation for defense as ought to have been made by the master of the ship in such a neighborhood, and perhaps it may be as well to remind the commercial public that it is impossible for the military arm to come in always in time to save their vessels from damage or even from total destruction. In this instance the boats of the *Ward* and the *Crusader* attracted by the flames were in time to save the vessel from burning up entirely; but if she had been provided with a few small arms, and her people had been more on the alert, they might have given a good account of the marauding party.

Will the Department give me the authority to release the ten seamen now in confinement here, against whom it appears there is no evidence which would warrant their further detention?

I have the honor to be, with great respect, your obedient servant,

ANDREW A. HARWOOD,
Commodore, Commanding Potomac Flotilla.

Hon. GIDEON WELLES,
Secretary of the Navy.

[Enclosures.]

POTOMAC FLOTILLA,
U. S. Mortar Schooner T. A. Ward, ——, *186*—.

SIR: About half past 2 o'clock on the morning of the 29th of October, I discovered a large ship on fire, bearing S. E.; it was about 8 miles distant. I immediately proceeded to her assistance, and arrived there at 6 o'clock a. m., and found the U. S. S. *Crusader* alongside of the burning vessel. I immediately sent two boats' crews on board to assist in putting out the fire. I found her to be the ship *Alleghanian*, of New York. She was from Baltimore with a cargo of guano, bound to London. She had been set on fire by a party of men from Mathews County, Va., calling themselves the Arabs. At 10:30 a. m., we had partly succeeded in extinguishing the fire, and at Captain Andrew's request, of the *Crusader*, I lay by the ship until the morning of the 30th, while he proceeded to Yorktown for assistance to tow her away. At 5:30 a. m., the *Crusader* arrived with assistance from Yorktown and towed the ship down the bay, to what place I am not informed. Again proceeded to my station at the mouth of the Rapahannock River, at which place I arrived at 10 o'clock on the morning of the 30th of October.

I would further state that I have information from reliable sources that the leader of the party that burned the above-named ship was one Lewis Hudgins, of Mathews County, Va.

I am, sir, respectfully, your obedient servant,

W. L. BABCOCK,
Acting Master, Commanding.

Lieutenant-Commander E. P. MCCREA,
Adjutant Potomac Flotilla.

Statement of James L. Jackson.

COMMANDANT'S OFFICE, NAVY YARD,
Washington, November 3, 1862.

James L. Jackson, seaman; left Baltimore in the *Alleghanian*, of New York, loaded with guano, bound to London, last Thursday week; meta head wind in Chesapeake Bay and came to anchor; set an anchor watch. About a quarter to 10, Jackson with another man having the watch, three boats came alongside, the crews armed with sabers and revolvers. They took possession of the ship, and after taking a quantity of small stores from her, breaking open the chests of the men, took all the clothes except one suit and some contained in a bag which was thrown into a boat unobserved by them.

The captain, chief mate, and pilot were carried off by the assailants. The second mate and the crew were divided among the two other boats belonging to the vessel. The crew were at first bound, but released, one at a time, as they passed over the side. The night was dark, and the boat in which Jackson got lost sight of the enemy's boat and pulled for the eastern shore; was picked up by the *Daniel Webster* near the mouth of the Potomac, and with his companions was handed over to the officers of the Potomac Flotilla and brought to the navy yard.

Saw the fire break out on board the *Alleghanian* during the night as they were pulling for the eastern shore.

Ship's company, according to Jackson's statement: One captain, 1 first mate, 1 second mate, 1 pilot, 1 carpenter, 14 men and 1 boy before the mast, 1 cook, 1 cabin boy—22 in all.

Letter from the Secretary of the Navy to Commodore Harwood, U. S. Navy, commanding Potomac Flotilla, transmitting information from the captain of ship Alleghanian.

NAVY DEPARTMENT, *November 17, 1862.*

SIR: I transmit herewith a copy of a communication from Captain Case, containing information of the designs of the rebels to surprise and capture some [of] our steamers in the waters of Virginia. The vessels of the flotilla should be cautioned.

I am, respectfully, your obedient servant,

GIDEON WELLES,
Secretary of the Navy.

Commodore A. A. HARWOOD,
Commanding Potomac Flotilla, Washington, D. C.

[Enclosure.]

BAY STEAMER LOUISIANA, *November 9, 1862.*

MY DEAR TURNER: I have just learned from the captain of the *Alleghanian* that the party who captured and burned his ship was a party from the rebel steamer *Patrick Henry*, who came from Richmond and waited three weeks before attacking the *Alleghanian* to capture a gunboat. The party was commanded by Lieutenants Wood and Lee, of the rebel Navy. They say they are determined to capture some of our boats. They went from the neighborhood of Gwynn's Island, at the mouth of the Piankatank. The night was dark, and a fire was built on the shore to mark the place to return to.

The *General Putnam* is going on the blockade between York and Piankatank rivers. Caution her captain. I dare say a like attempt may be made against our picket boats in the James. The plan is a feasible one.

The party numbered 25, armed with muskets, cutlasses, and French revolvers, 9 barrels, one of large bore loaded with 14 buckshot. The same party burned a schooner (loaded with hay) in the Potomac a short time since. Advise Parker.

Yours, sincerely,

A. LUDLOW CASE.

Captain TURNER, U. S. Navy,
Commanding New Ironsides, Newport News, Va.

P. S.—Let the admiral know. The same thing may be attempted on the sounds.

Letter from Warner T. Jones, esq., to Flag-Officer Forrest, C. S. Navy, relative to the arrest of Peter Smith for complicity in the burning of the ship Alleghanian.

RICHMOND, VA., *November 17, 1862.*

SIR: I have received information, which I consider entirely reliable, that a gunboat in the service of the U. S. Government came up the York River early on the morning of the 10th instant and sent an armed boat ashore, at or near a place called Cappahosic, in the county of Gloucester, and arrested Peter Smith and carried him as a prisoner on board said gunboat, where the order was given, in the presence or hearing of John Sterling, a citizen of Gloucester, to put him (Smith) in double irons. It is known to you, from the official report of Lieutenant Wood, of the C. S. Navy, that the said Peter Smith acted with him under orders as pilot on a recent expedition to Mathews County, Va., and in the Chesapeake Bay, on which occasion a merchant vessel of the enemy was burned by Lieutenant Wood and party and the captain and mate of the vessel brought prisoners to Richmond. There can be no doubt in my mind that Peter Smith has been made a prisoner by the enemy because of his participation in the affair of the burning of the vessel alluded to by Lieutenant Wood and party, and that the order given on board the gunboat to put him in double irons justifies the conclusion that they intend to proceed against him and treat him either as a private citizen engaged in an unauthorized expedition or as a pirate taken on the high seas. Under these circumstances I ask that the Government will give to said Smith that aid and protection which his case, in my opinion, eminently merits, and that the necessary steps be taken and orders given to that end.

Most respectfully,

WARNER T. JONES,
Member House Delegates of Virginia for Gloucester County.

Flag-Officer F. FORREST, C. S. Navy.

Order of Commodore Harwood, U. S. Navy, commanding Potomac Flotilla, regarding the U. S. S. Wyandank.

GENERAL ORDER.] POTOMAC FLOTILLA, *October 29, 1862.*

The *Wyandank* is storeship of the Potomac Flotilla and is not to be used as a cruising or dispatch vessel, save under urgent necessity. Her station will be in Wicomico River, subject to my orders only.

ANDREW A. HARWOOD,
Commodore, Commanding Potomac Flotilla.

Report of Commodore Harwood, U. S. Navy, commanding Potomac Flotilla, regarding repairing and refitting of vessels.

POTOMAC FLOTILLA,
COMMANDANT'S OFFICE, NAVY YARD,
Washington, October 30, 1862.

SIR: I beg leave to inform the Department that the mortar vessel *Sophronia* is ready to proceed to Baltimore for repairs as soon as her relief arrives.

The necessity for repairing several of the vessels of the Potomac Flotilla and the activity of the contraband trade across the river induce me to request the Department that the mortar vessels to take the place of the *Matthew Vassar* and *William Bacon*, ordered to be fitted for store vessels, may be sent from Baltimore as soon as practicable.

The *Arletta* and *William Bacon* are at the yard for the purpose of having their mortars taken out, and I would respectfully request instruction as to the manner in which they are to be fitted.

I expect the arrival of the *Matthew Vassar* to-day.

I have the honor to be, with great respect, your obedient servant,

ANDW. A. HARWOOD,
Commodore, Commanding Potomac Flotilla.

Hon. GIDEON WELLES,
Secretary of the Navy, Navy Department.

Report of Lieutenant-Commander Magaw, U. S. Navy, commanding First Division Potomac Flotilla, regarding the taking of pistols from the house of John Tayloe, esq., in King George County, Va.

U. S. S. FREEBORN, *October 30, 1862.*

SIR: I have the honor to acknowledge the receipt of your letter of yesterday in relation to a pair of old pistols taken from the house of Mr. John Tayloe, of King George [County], Va., a captain in the Ninth Virginia Horse. Mr. Plunkett was censured by me for not bringing off all arms found at Mr. Tayloe's, but he states he ordered the pistols in question not to be taken. One of the boat's crew disobeyed orders and brought off one of them, which I send you. Several days elapsed after Mr. Tayloe's arrest before I discovered that this pistol was on board. When I sent him up I permitted him to retain his side arms. The third clause of your letter is severe. Do you consider the taking of arms from the house of a man known to be an enemy of the Government and in the enemy's country as pillage? Mr. Tayloe appears to be fond of letter writing. I am sorry he was on sick furlough when arrested, but have heard he was absent from his company without leave. His preparations were made to leave home early the next morning.

I hereby return Mr. Tayloe's letter.

Very respectfully, your servant,

SAMUEL MAGAW,
Lieutenant-Commander.

Commodore A. A. HARWOOD,
Commanding Potomac Flotilla.

Report of Acting Master Brown, U. S. Navy, commanding U. S. S. Cœur de Lion, regarding a refugee.

POTOMAC RIVER, *October 31, 1862.*

SIR: I have to report to you that this afternoon at 1 o'clock, while lying off Chicomuxen Creek, we picked up a refugee coming from the Virginia shore.

His name is James T. Griffen, and he belongs to Stafford County, 4 miles from Chopawamsic Creek.

He took the oath of allegiance to the U. S. Government April 14, 1862, and returned to Virginia when our troops occupied that section of the country. He says the rebel pickets are hovering about within 1 mile of the river, taking every man that is available for recruits; therefore he made his escape.

Sending him and his skiff to you,

I am, most respectfully, your obedient servant,

CHAS. H. BROWN,
Commanding U. S. S. Cœur de Lion.

Lieutenant-Commander SAMUEL MAGAW,
U. S. S. Thomas Freeborn.

Report of Acting Master Frank, U. S. Navy, commanding U. S. S. Reliance, regarding capture of sloop Pointer, of Georgetown, D. C.

U. S. S. RELIANCE,
Off Alexandria, October 31, 1862.

SIR: I herewith send up to the yard, under charge of Acting Master's Mate Walters, of this vessel, the sloop *Pointer*, of Georgetown, D. C., and two men and one boy captured this day at the wharf in this city.

J. Otis, the captain, boarded this vessel for a pass down the river to Pamunkey Creek, Maryland, bringing with him a clearance from the custom-house at Alexandria as being light.

From information received, however, this forenoon I sent Mr. Walters to overhaul her, which he did and brought her alongside.

Instead of being light, as the clearance stated, she had on board groceries, dry goods, and whisky.

The parties telling contrary tales, and the entire proceedings generally being at variance with regularity, I determined to submit all to you. Mr. Walters will explain in detail everything concerning the capture.

I am, very respectfully, your obedient servant,

A. J. FRANK,
Acting Master, Commanding Reliance.

Commodore A. A. HARWOOD,
Commanding Potomac Flotilla.

Report of Commodore Harwood, U. S. Navy, commanding Potomac Flotilla, transmitting certificates of capture.

POTOMAC FLOTILLA,
COMMANDANT'S OFFICE, NAVY YARD,
Washington, November 1, 1862.

SIR: I enclose three certificates of capture by the vessels of the Potomac Flotilla, two by the U. S. S. *Eureka* and one by the U. S. S. *Satellite*, on the 30th ultimo.

The prisoners have been sent to the provost-marshal.

I have the honor to be, very respectfully, your obedient servant,

ANDW. A. HARWOOD,
Commodore, Commanding Potomac Flotilla.

Hon. GIDEON WELLES,
Secretary of the Navy, Navy Department.

[Enclosures.]

Potomac Flotilla.—Certificate of capture.

Name and character of prize.—One man—John Lambert.

By whom and by what vessel captured.—J. J. Brice, U. S. S. *Eureka.*

When capture made.—October 29, 1862.

Where and for what reasons.—Cedar Point. Secreted in a cornfield, and acknowledged having run the blockade the day previous.

The cargo, if any on board.—[None.]

What papers found.—None.

Remarks.—[None.]

OCTOBER 30, 1862.

I hereby certify that the above-mentioned person was captured by the undersigned, commanding the U. S. S. *Eureka*, of the Potomac Flotilla, at the time and place above designated, and that the above and annexed statement is true in every particular.

J. J. BRICE,
Acting Ensign.

Potomac Flotilla.—Certificate of capture.

Name and character of prize.—A boat (no name) carrying passengers. The boat worthless and destroyed.

By whom and by what vessel capture made.—Acting Ensign J. J. Brice, U. S. S. *Eureka.*

When capture made.—October 30, 1862, p. m.

Where and for what reasons.—Off Mathias Point, crossing the Potomac River clandestinely and violating the blockade.

The cargo, if any on board.—None, except baggage.

What papers found.—Some letters found on one of the prisoners, Mr. H. Degen.

Remarks.—The following is a list of prisoners, viz: (1) John Denfil (wife and three children); has a little money and represents himself as a refugee. (2) George F. Fisher (wife and one child); has a little money with him; represents himself as a refugee. (3) Joseph Myer, going North to see his relations; intends going back to North Carolina, where his family resides; says he is a loyal citizen. (4) Henry Degen; states he will remain North or go to Europe. The letters were in his possession and are evidence against him. He had also more money (about $2,800 rebel bonds, etc.) than necessary for his expenses. Thornton Fitzhugh, Lewis Davis (colored), boat's crew.

OCTOBER 30, 1862.

I hereby certify that the above-mentioned persons were captured by the undersigned, commanding the U. S. S. *Eureka*, of the Potomac Flotilla, at the time and place above designated, and that the above and annexed statement is true in every particular.

J. J. BRICE,
Acting Ensign.

Potomac Flotilla.—Certificate of capture.

Name and character of prize.—One canoe containing five men giving the following names: Lewis Freeman, William Bigger, James Helming, Edwin Keenon, Franklin Que.

By whom and by what vessel captured.—Volunteer Lieutenant P. Hays, steamer *Satellite.*

When capture made.—October 30, a. m.

Where and for what reasons.—Off the Wicomico River, under suspicion of going to or from Virginia.

The cargo, if any on board.—Two carpetbags.

What papers found.—[None.]

Remarks.—Mr. Lewis Freeman states that he came from Virginia, and that he has never been attached to the Confederate Army, as he is exempt from military duty. He came from Louisiana very recently. He (Freeman) states that Messrs. Helming and Keenon were hired by the party to take them from Cobb's Point into Wicomico River. The canoe is worthless.

THURSDAY MORNING, *October 30, 1862.*

I hereby certify that the above-mentioned canoe and five men were captured by the undersigned, commanding the U. S. S. *Satellite* of the Potomac Flotilla, at the time and place above designated, and that the above and annexed statement is true in every particular.

PETER HAYS,
Acting Volunteer Lieutenant, Commanding Satellite.

Report of Lieutenant-Commander Magaw, U. S. Navy, commanding First Division Potomac Flotilla, regarding contrabands and refugees.

U. S. S. FREEBORN, *November 2, 1862.*

SIR: I send Acting Master's Mate [Charles F.] Watson with some contrabands and a skiff. The inhabitants of the Virginia shore are now in the habit of sending these trustworthy negroes to Maryland for goods. Mr. Rollins having communicated with his father at Machodoc, found that the boat *Merrimack* had been taken to Richmond. Our expedition did not take place.

I send a refugee picked up by the *Cœur de Lion* with the letters of her commanding officer in relation to him. Mr. Rollins would be valuable to me, as he knows the creeks and the country below Mathias. I have every confidence in him, and if you can give [him] a situation as master's mate or clerk, I think the interest of the Government would be served.

I have the honor to be, your servant,

SAMUEL MAGAW,
Lieutenant-Commander.

Commodore A. A. HARWOOD,
Commanding, etc.

Report of Commodore Harwood, U. S. Navy, commanding Potomac Flotilla, transmitting certificate of capture.

COMMANDANT'S OFFICE, NAVY YARD,
Washington, November 3, 1862.

SIR: I beg leave to enclose a certificate of capture by the Potomac Flotilla of three boats manned by slaves, who were taken in the attempt to run goods across the Potomac by order of their masters.

These slaves have been placed in the custody of the provost-marshal.

I have the honor to be, with great respect, your obedient servant,

ANDW. A. HARWOOD,
Commodore, Commanding Potomac Flotilla.

Hon. GIDEON WELLES,
Secretary of the Navy, Navy Department.

[Enclosure.]

Potomac Flotilla.—Certificate of capture.

Name and character of prize.—Three boats without name; two worthless and destroyed.

By whom and by what vessel capture made.—By Acting Master's Mate C. F. Watson, of the U. S. S. *Freeborn*, Lieutenant-Commander Samuel Magaw.

When capture made.—November 1, 1862, p. m.

Where and for what reasons.—At Maryland Point, for violating the blockade.

The cargo, if any on board.—None.

What papers found.—None.

Remarks.—The following is the list of the men, viz: Benjamin Cole (slave), belonging to William D. Hoe, of Virginia; Samuel Mowe (slave), belonging to Ann Rice, of Virginia; Robert Brown (slave), belonging to Charles Scott, of Fredericksburg, Va.; Fincade Lucas (slave), belonging to Margaret Miffleton, of Virginia; Beverly Brooks (slave), belonging to Mrs. Judge Alexander, of Virginia; George Parker (slave), belonging to Charles Barry, of Virginia. These men were all taken for attempting to run goods across from Maryland to Virginia. Their masters, furnishing them with money, sent them across to purchase goods and return them to said masters, they being confidential servants. They were taken before landing on Maryland shore.

NOVEMBER 1, 1862.

I hereby certify that the above-mentioned boats were captured by the undersigned, commanding the U. S. S. *Freeborn*, of the Potomac Flotilla, at the time and place above designated, and that the above and annexed statement is true in every particular.

SAMUEL MAGAW,
Lieutenant-Commander.

Report of Lieutenant-Commander McCrea, U. S. Navy, commanding Second Division Potomac Flotilla, transmitting reports regarding expeditions to Gwynn's Island and Nomini Creek, Virginia.

POTOMAC FLOTILLA, *November 6, 1862.*

SIR: I have the honor to submit the proceedings of the Second Division, Potomac Flotilla:

I sent an expedition up the Nomini Creek, and enclose you the report of the officer in charge, and also the report of Acting Master Charles H. Brown, commanding the *Cœur de Lion* (Station H), Rappahannock and Piankatank rivers.

I would recommend the destruction of the property belonging to one Hudgins, on the Piankatank, as I have reason to believe from the statements of Union people in that vicinity [he] was leader of the party that burned the ship *Alleghany* [*Alleghanian*].

I would also advise an increase of the Potomac Flotilla, as the command covers too much ground for the number of vessels to guard constantly and effectually each station. The *Teaser* has captured two sloops and prisoners.

Very respectfully, your obedient servant,

E. P. McCREA,
Lieutenant-Commander, Commanding Second Division, and Adjutant.

Commodore A. A. HARWOOD,
Commanding Potomac Flotilla.

[Enclosures.]

GWYNN'S ISLAND ANCHORAGE,
Potomac Flotilla, November 4, 1862.

SIR: Having relieved the U. S. S. *Resolute* and the schooner [*T. A.*] *Ward*, according to your order, I anchored for the night in the Rappahannock River.

The next morning being Monday, November 3, the *Cœur de Lion*, *Teaser*, and the schooner *S. H. Poole* got underway and proceeded to Gwynn's Island. I sent the boat under charge of Acting Master's Mate Gallagher, and then Captain Sheridan, of the *Teaser*, taking his boat, went in charge of the expedition to protect the boats of the *S. H. Poole* while removing the effects of the Union families from the island. Allowing the boats to remain as long as I thought expedient, I then recalled them by signal. At 8 p. m., fearing the enemy might set fire to the building during the night, I sent a boat from each steamer to protect the house. While the boats were returning to the ship in the afternoon Captain Sheridan captured a Mr. Edwards, of the Confederate Army.

Tuesday, November 4, after breakfast, the boats were again dispatched and returned with effects of families. At noon I received a note from Lieutenant Commanding T. Fitzhugh, C. S. Army, to the effect that if I wished to confer with him in regard to the removal of the Union people, he would meet me under a flag of truce at any place I might designate. I accordingly appointed the place to be Gwynn's Island, opposite the wharf, on the mainland. Arriving at the spot designated I met a messenger with a note stating that Lieutenant Fitzhugh objected to the rendezvous, it not being on the mainland, but as there was no limit mentioned in the first communication I considered it derogatory to the honor of an officer in the U. S. Navy to give way under such circumstances, and sent him a message to that effect. He then came over and apologized, saying he thought he mentioned the term mainland in his note.

We then agreed to suspend hostilities until the schooner with the families on board should have left the harbor. He wished to have Mr. Edwards returned, as we had not been molested thus far, but I told him no, we had taken him while acting under the cover of our guns, and the request could not be granted.

Having assisted Mr. Wiggins to remove his property, word was sent that any other families might also take this opportunity to leave.

Tuesday, November 4, Mr. John W. Billups came into the harbor from Annemessex and came alongside showing a permit from Brigadier-General H. H. Lockwood to cross the bay and report to the vessel guarding the coast. He wished to remove his family, but as he had no permit from the Secretary of the Navy, War, or Treasury, I could not allow him to go ashore, but sent him my own boat and gave his family permission to leave under the authority of the order from Commodore

Harwood to Mr. Wiggins to bring away any Union families desirous of leaving. I shall send them off in the schooner *S. H. Poole* under that order.

I obtained permission to-day to fill up our water casks, also those of the *Teaser*, under this flag of truce, as we have others besides our own crew to provide for.

Very respectfully, your most obedient servant,

CHAS. H. BROWN,
Commanding U. S. S. Cœur de Lion.

Lieutenant-Commander E. P. McCREA,
Commanding Second Division Potomac Flotilla.

U. S. S. JACOB BELL,
Potomac Flotilla, November 4, 1862.

SIR: Agreeably to your orders from Lieutenant-Commander E. P. McCrea, adjutant Potomac Flotilla, I proceeded this morning to Nomini River [Creek], Virginia, for the purpose of ascertaining if there were any vessels or boats up the same that might be or had been used to violate the blockade.

I arrived at the mouth of the river at 12 o'clock m., and found but 8 feet over the bar at high water. Not deeming it advisable to proceed any farther with the vessel, came to an anchor and sent an armed launch, with howitzer and thirteen men, under the charge of Acting Ensign G. E. McConnell and Ambrose Bentley, third assistant engineer.

I learned from people on shore that the river extended 17 miles inland, and believing that it would not be safe to send such a small force so far, I dispatched the cutter under the charge of Master's Mate J. H. Butler, with five men, with orders to overtake the launch, make a short reconnoissance, and return to the vessels.

During the absence of the boats, pickets could be seen plainly on a hill 1½ miles distant. The boats returned at sundown, bringing with them a small sloop and a canoe that had been used to carry goods from Maryland to Virginia.

The expedition went up the river about 5 miles, destroying two schooners that could not be gotten out. They also met a small cavalry force, but after firing a shrapnel at them, dispersed and ran. Landing they found the place to be a picket station, an account of which you will find in the accompanying report of Acting Ensign G. E. McConnell, also of articles taken, etc.

I learned that there are other schooners up the river, and would respectfully ask for a larger force that I may be able to go to the head of the river.

Hoping you will grant my request, I have the honor to be, your obedient servant,

W. T. STREET,
Acting Master, Commanding.

Commodore A. A. HARWOOD,
Commanding Navy Yard and Potomac Flotilla.

[Subenclosure.]

U. S. S. JACOB BELL, *November 4, 1862.*

SIR: In obedience to your orders I proceeded to-day up the Nomini Creek with a launch and crew of thirteen men. About 5 miles up we discovered a large schooner hidden in a very small bay, so that nothing

but her topmasts showed. Not being able to get her out I set fire to her. She was called the *Robert Wilbur*. I also found a small schooner partly hauled up on the beach, opposite a small brick church. We fired her, thinking she might possibly be used by the rebels. I could not find any name on her. While we were firing this vessel a party of men appeared on a bluff near us. I fired a 1½-second shrapnel from the howitzer, which dispersed them. We then landed at the church and saw three cavalry soldiers mount and run. Not being able to overtake them they escaped.

On entering the building I found it had been used as a picket station, and captured in it the following articles, viz: One cavalry sword, 1 cavalry rifle, 1 cavalry bridle, 1 set of spurs, 1 double-barrel shotgun fixed for cavalry service.

In the yard was a large, heavy wagon which had been used to transport a cutter from Fredericksburg to the creek. From information received I think the boat is the one captured some time since by the *T. A. Ward*. We cut all the spokes of the wheels and set fire to the carriage. It had the following painted on the carriage, viz: "U. S. III, Stevenson, builder, N. Y."

It now being very near sundown I deemed it inadvisable to proceed any farther up the creek, as I had good reasons to believe there was a force of the enemy near by. I accordingly stood down and captured a sloop and large canoe, with oarlocks muffled, which were hidden in the bushes. When about 4 miles down I noticed that some three or four men were following, but did not molest, as they also took good care to keep out of our range.

Acting Master's Mate J. H. Butler, with a boat's crew of five men, joined me when about halfway up and assisted in destroying the vessels named.

Acting Third Engineer Ambrose Bentley accompanied me in the launch according to your orders.

Hoping I fulfilled my instructions to your satisfaction, I am, very respectfully, your obedient servant,

G. E. McCONNELL,
Acting Ensign, U. S. Navy.

Acting Master W. T. STREET,
Commanding Jacob Bell.

Order of the Secretary of the Navy to Commodore Harwood, U. S. Navy, commanding Potomac Flotilla, to assume responsibility for the Department in deciding individual cases of breach of blockade.

NAVY DEPARTMENT, *November 6, 1862.*

SIR: Your letter concerning Mr. Quesenbury has been received. It has been the intention of the Department to leave the whole matter of communicating with the Virginia shore on the Potomac to the commander of the flotilla, as being better advised of its effect upon the police arrangements that have been or may be established than the Department can possibly be.

You are authorized to afford protection and assistance to loyal citizens when you shall judge it expedient and it can be done without detriment to the public service.

You will investigate individual cases and act according to your best judgment, making proper discriminations.

Under this rule, the case of Mr. Quesenbury is respectfully referred to you.

I am, respectfully, your obedient servant,

GIDEON WELLES,
Secretary of the Navy.

Commodore A. A. HARWOOD,
Commanding Potomac Flotilla.

List of stations in the Potomac River.

GENERAL ORDERS, No. 9.] NOVEMBER 6, 1862.

The following are to be known as stations on the Potomac River, alphabetically arranged, and to be occupied by at least one vessel constantly, and not to be withdrawn, save by the commanding officer of division, and for a specific purpose, which purpose is to be reported to the commander in chief at the earliest opportunity for approval:

List of stations.

Station A.—Alexandria to Indian Head.
Station B.—Indian Head to Liverpool Point.
Station C.—Liverpool Point to Pope's Creek, Md.
Station D.—Pope's Creek, Md., to Wicomico River.
Station E.—Wicomico River to Breton's Bay.
Station F.—Breton's Bay to St. George's Island.
Station G.—St. George's Island to Smith's Point light-ship.
Station H.—Smith's Point, Va., to Piankatank River, including Rappahannock River.

The names of vessels in their respective stations to be furnished to the adjutant of the flotilla.

In future, officers capturing prizes or prize goods will proceed to the navy yard with the said prizes and report themselves to the commander in chief and ready to make an affidavit as to the facts concerning the capture to the district attorney, according to law.

ANDREW A. HARWOOD,
Commodore, Commanding Potomac Flotilla.

Report of Commodore Harwood, U. S. Navy, commanding Potomac Flotilla, transmitting certificates of captures made by U. S. S. Teaser.

COMMANDANT'S OFFICE, NAVY YARD,
Washington, November 8, 1862.

SIR: I herewith enclose certificates of captures made by the U. S. S. *Teaser*, of the Potomac Flotilla, on the 6th and 7th instant.

The prisoners named in the certificates have been placed in the custody of the provost-marshal.

I have the honor to be, with great respect, your obedient servant,

ANDW. A. HARWOOD,
Commodore, Commanding Potomac Flotilla.

Hon. GIDEON WELLES,
Secretary of the Navy, Navy Department.

[Enclosures.]

Potomac Flotilla.—Certificate of capture.

Name and character of prize.—Sloop; no name.

By whom and by what vessel capture made.—Philip Sheridan, commanding officer U. S. S. *Teaser.*

When capture made.—November 6, 1862.
Where and for what reasons.—Chesapeake Bay; violating blockade.
The cargo, if any on board.—None.
What papers found.—None.
Remarks.—Persons: Joseph Staches, $351, unconverted notes; William Lilonthorn, $27, unconverted notes.

NOVEMBER 6, 1862.

I hereby certify that the above-mentioned sloop was captured by the undersigned, commanding the U. S. S. *Teaser*, of the Potomac Flotilla, at the time and place above designated, and that the above and annexed statement is true in every particular.

PHILIP SHERIDAN.

Potomac Flotilla.—Certificate of capture.

Name and character of prize.—Sloop *Grapeshot.*
By whom and by what vessel capture made.—Philip Sheridan, commanding officer U. S. S. *Teaser.*
When capture made.—November 6, 1862.
Where and for what reasons.—Chesapeake Bay; violating blockade.
The cargo, if any on board.—None.
What papers found.—None.
Remarks.—Persons: William Wessells, Virginia, $10 gold; Angelo Tayloe, Virginia, $20 ($10 converted, $10 unconverted); George T. Bonille.

NOVEMBER 6, 1862.

I hereby certify that the above-mentioned sloop was captured by the undersigned, commanding the U. S. S. *Teaser*, of the Potomac Flotilla, at the time and place designated, and that the above and annexed statement is true in every particular.

PHILIP SHERIDAN.

Report of Commodore Harwood, U. S. Navy, commanding Potomac Flotilla, transmitting certificates of captures made by U. S. steamers Satellite, Teaser, and Thomas Freeborn.

NAVY YARD, COMMANDANT'S OFFICE,
Washington, November 8, 1862.

SIR: The enclosed certificates of captures of merchandise and prisoners taken will inform the Department of operations of a portion of the Potomac Flotilla.

The prizes and goods are duly reported to the district attorney, and the prisoners, together with the information relating to their arrest, to the military authorities.

I also forward copies of the reports* of Acting Master Charles H. Brown, commanding the U. S. S. *Cœur de Lion*, and Acting Master's Mate G. E. McConnell, of the U. S. S. *Jacob Bell*, to Lieutenant Commander McCrea, giving accounts of operations on the lower Potomac.

Lieutenant-Commander McCrea's letter† to me (a copy of which is also enclosed) contains a recommendation of an increase of the flotilla, to which I would respectfully call the attention of the Department.

---

* See pp. 147, 148. † See p. 146.

The vessels now at my disposal are rather few, considering the nature and extent of the field of operations, the pertinacity of the enemy in his attempts to obtain men and supplies, and the necessity of protecting by a moving force our vessels of commerce, which are obliged to anchor at times in places exposed to attack.

Add to this that several of the most effective vessels under my command require repairs at a time when the dock at the yard is in constant requisition and the calls for convoy and the forwarding of stores and dispatches.

A few more small vessels of light draft, commanded by young officers of good habits, will greatly contribute to the efficiency of the blockade.

I would also ask the Department to permit me to appoint another clerk, to enable me to keep up my correspondence. Acting Master Henry J. Rogers has been doing duty as secretary of the flotilla, to which he gives his whole attention, but I have full employment for another clerk, if the Department will sanction the appointment.

I have the honor to be, with great respect, your obedient servant,

ANDW. A. HARWOOD,
Commodore, Commanding Potomac Flotilla.

Hon. GIDEON WELLES,
Secretary of the Navy, Navy Department.

[Enclosures.]

Potomac Flotilla.—Certificate of capture.

Name and character of prize.—One yawl boat, laden with goods, and three men, giving their names as William Bagby, of King and Queen County, Va.; James J. Leatch, of Hanover County, Va.; free negro, James R. Ashton, Westmoreland County, Va.

By whom and by what vessel capture made.—Volunteer Lieutenant P. Hays, steamer *Satellite.*

When capture made.—November 2, 1862, 8 p. m.

Where and for what reasons.—Neal's Creek [Sound]; found with goods for Virginia.

The cargo, if any on board.—One barrel of whisky, 1 barrel sugar, 4 sacks salt, 1 keg carbonate soda, 1 box shoes; 1 box shoes, dry goods, crockery, etc.; 1 bag containing 7 hats, 1 piece gingham, 2 pieces calico, 2 pounds coffee, 6 pounds soap, remnant of cloth, 1 bag containing 7 pair shoes, 1 bag skeleton skirts, 1 bag shot, 5 tin pans, 1 box soap, 1 box candles, 11 corn brooms, 2 pounds powder, 1 jug molasses, 1 keg nails.

What papers found.—One memorandum book, invoices, receipts, etc., forwarded.

Remarks.—Eleven corn brooms, 2 pounds powder, 1 jug molasses, kept for ship's use. The goods were taken in the boat; the prisoners were found in the woods guarding the boat; the captain of the boat made his escape. The prisoners state that they left Virginia for Maryland Thursday night, October 30.

SUNDAY P. M., *November 2, 1862.*

I hereby certify that the above-mentioned boat, prisoners, and goods were captured by the undersigned, commanding U. S. S. *Satellite*, of the Potomac Flotilla, at the time and place above designated, and that the above and annexed statement is true in every particular.

PETER HAYS,
Acting Volunteer Lieutenant, Commanding Satellite.

Potomac Flotilla.—Certificate of capture.

Name and character of prize.—One canoe; destroyed.

By whom and by what vessel capture made.—Philip Sheridan, commanding officer U. S. S. *Teaser.*

When capture made.—November 2, 1862.

Where and for what reasons.—Rappahannock; violation of blockade.

The cargo, if any on board.—[None.]

What papers found.—No papers found.

Remarks.—Andrew J. Davis, Richard S. Risby, John W. Camey, prisoners. The articles captured were trifling in amount, and were, by the advice of Acting Master C. H. Brown, of the U. S. S. *Cœur de Lion*, turned over to the families on Gwynn's Island, Piankatank River.

NOVEMBER 6, 1862.

I hereby certify that the above-mentioned canoe was captured by the undersigned, commanding the U. S. S. *Teaser*, of the Potomac Flotilla, at the time and place above designated, and that the above and annexed statement is true in every particular.

PHILIP SHERIDAN.

Potomac Flotilla.—Certificate of capture.

Name and character of prize.—One scow, no name; destroyed, being of no value.

By whom and by what vessel capture made.—U. S. S. *Freeborn.*

When capture made.—November 3, 1862.

Where and for what reasons.—Found crossing the river from Virginia to Maryland.

The cargo, if any on board.—None.

What papers found.—None.

Remarks.—The following is the list of men, viz: Simon Hinly and J. L. Engel. These men were found in the river opposite Indian Head, supposed to be going into Maryland for the purpose of buying goods to run the blockade.

NOVEMBER 3, 1862.

I hereby certify that the above-mentioned persons were captured by the undersigned, commanding U. S. S. *Freeborn*, of the Potomac Flotilla, at the time and place above designated, and that the above and annexed statement is true in every particular.

SAMUEL MAGAW,
Lieutenant-Commander, U. S. Navy.

Report of Commodore Harwood, U. S. Navy, commanding Potomac Flotilla, transmitting certificate of capture.

COMMANDANT'S OFFICE, NAVY YARD, *November 10, 1862.*

SIR: I enclose the certificate of capture of the sloop *Capitola*, by boats of the *Resolute*, First Division Potomac Flotilla.

I have the honor to be, with great respect, your obedient servant,

ANDW. A. HARWOOD,
Commodore, Commanding Potomac Flotilla.

Hon. GIDEON WELLES,
Secretary of the Navy, Navy Department.

[Enclosure.]

Potomac Flotilla.—Certificate of capture.

Name and character of prize.—Sloop *Capitola.*

By whom and by what vessel capture made.—J. H. Gordon, master's mate, U. S. S. *Resolute.*

When capture made.—November 8, 1862.

Where and for what reasons.—Glymont, Md.

The cargo, if any on board.—No cargo.

What papers found.—No papers.

Remarks.—There was one man on the sloop at the time of capture. He stated to the officer that he was there for the purpose of carrying passengers and goods to Virginia, and if he (the officer) would go with him he would show him where the goods were concealed. After getting in the woods he made good his escape from the officer.

NOVEMBER 8, 1862.

I hereby certify that the above-mentioned sloop *Capitola* was captured by the undersigned, commanding the U. S. S. *Resolute*, of the Potomac Flotilla, at the time and place above designated, and that the above and annexed statement is true in every particular.

JAMES C. TOLE.

Instructions from Commodore Harwood, U. S. Navy, commanding Potomac Flotilla, to Lieutenant-Commander Magaw, U. S. Navy, commanding First Division Potomac Flotilla, regarding his command.

NAVY YARD, WASHINGTON, *November 13, 1862.*

SIR: I must draw your attention to the general orders issued by me, which I wish you to see rigidly enforced by all the officers of the division under your command.

With this view you will visit each vessel of your division at periods not exceeding a month, inspect their general condition, and see that the circulars and general orders are obeyed implicitly.

I wish you to see that the vessels are properly provided with signals and signal books; also that they have the steam alphabet and are exercised in using it.

I shall endeavor to have the vessels of your command put in good repair with all possible dispatch. Meanwhile it is very desirable that all trading vessels should be watched in case they should be becalmed or drifted near the Virginia shore and require protection. Keep the steamers moving, especially in the vicinity of points from which attack may be expected.

Attention must be paid to the general order respecting coal.

You will enquire into the neglect of the commanding officers of the *Teaser* and *Eureka* in this particular.

It will be impossible to keep the account of the coal wharves unless the general order is attended to.

Very respectfully, your obedient servant,

ANDW. A. HARWOOD,
Commodore, Commanding Potomac Flotilla.

Lieutenant-Commander SAML. MAGAW,
Commanding First Division Potomac Flotilla.

Report of Commodore Harwood, U. S. Navy, commanding Potomac Flotilla, regarding arrested violators of blockade.

COMMANDANT'S OFFICE, NAVY YARD, *November 13, 1862.*

SIR: I have to inform you that the following-named prisoners, William M. Becket, R. Haxter, M. Girsh, A. P. Robinson, John Benson, Edward Wilson, arrested in the attempt to cross from Virginia to Maryland by the boats of the Potomac Flotilla, were yesterday committed to the custody of the provost-marshal. Among them was the discharged rebel soldier named William M. Becket, and a man by the name of Wilson, who is reported to me as having crossed from Maryland to Virginia two weeks ago. These men had among them money to the amount $3,000, which is in my possession.

I have the honor to be, with great respect, etc.,

ANDW. A. HARWOOD,
Commodore, Commanding Potomac Flotilla.

Hon. GIDEON WELLES,
Secretary of the Navy.

[Telegram.]

Immediate.] NAVY DEPARTMENT, *November 14, 1862.*

Place a steamer at the disposal of Captain Ulric Dahlgren, of General Sigel's staff, who will be found at Alexandria. The steamer must be able to carry some cavalry down the river. Answer.

GIDEON WELLES,
Secretary Navy.

Commodore HARWOOD,
Commandant Navy Yard, Washington, D. C.

[Telegram.]

NAVY DEPARTMENT, *November 14, 1862.*

Have a couple of gunboats with a competent officer to lay off Aquia Creek to protect the landing there. Let them be there to-day.

GIDEON WELLES,
Secretary Navy.

Commodore HARWOOD,
Commandant Navy Yard, Washington, D. C.

[Telegram.]

NAVY YARD, *November 14, 1862.*

The *Leslie* is returning. I shall send her down immediately to send gunboats to Aquia Creek. Lieutenant-Commander Magaw, who is here, will be sent in her with instructions.

A. A. HARWOOD,
Commodore.

Hon. SECRETARY OF THE NAVY.

Report of Lieutenant-Commander McCrea, U. S. Navy, commanding Second Division Potomac Flotilla, regarding capture of sloop G. W. Green by U. S. schooner T. A. Ward.

U. S. S. JACOB BELL,
Potomac Flotilla, November 17, 1862.

SIR: I have the honor to report the capture of a sloop and seine boat, laden with guns for Virginia, and six prisoners, in St. Jerome's Creek, Maryland, by boats sent from the schooner *T. A. Ward*, of this division; some of the prisoners are supposed to be rebel officers.

The captain of the sloop says he was allowed to pass by the guard ship at Baltimore, saying small craft did not need a pass. I do not vouch for the truth of the statement.

To establish an effective blockade, we need many more vessels and the cooperation of the custom-houses and a military force on shore.

I would add that a mail for Richmond was found in the seine boat, which I forward. The names of the prisoners you will find upon the certificate of capture.

Very respectfully, your obedient servant,

E. P. MCCREA,
Lieutenant-Commander and Adjutant.

Commodore A. A. HARWOOD,
Commanding Potomac Flotilla.

Letter from Acting Master Rogers, U. S. Navy, to provost-marshal-general of Maryland, regarding captured sloop G. W. Green.

NAVY YARD, WASHINGTON, *December 5, 1862.*

SIR: In reply to your letter of the 4th instant, I have to say that the sloop captured on the 16th ultimo by the Potomac Flotilla at St. Jerome's Creek, Maryland, for violating the blockade is named the *G. W. Green*, and that a person named H. B. Hodges was on board at the time of capture.

A lookout will be kept for the *Reindeer*, in accordance with your suggestion.

Very respectfully, your obedient servant,

HENRY J. ROGERS,
Acting Master and Secretary of Potomac Flotilla.

Provost-Marshal-General J. L. MCPHAIL,
Baltimore, Md.

Order of the Secretary of the Navy to Commodore Harwood, U. S. Navy, commanding Potomac Flotilla, for the protection of army property near the mouth of the Rappahannock River.

NAVY DEPARTMENT, *November 17, 1862.*

SIR: The Quartermaster-General of the Army states that he has information that there is a considerable amount of Government property, principally wagons, in sunken barges lying along the shore near the mouth of the Rappahannock, which might be recovered, and asks that a naval vessel may be directed to guard this property until a

steamer can be sent to recover it. You will, therefore, please give such orders as will accomplish the desired end.

I am, respectfully, your obedient servant,

GIDEON WELLES,
Secretary of the Navy.

Commodore A. A. HARWOOD,
Commandant Potomac Flotilla, etc., Washington, D. C.

Report of Acting Master Provost, U. S. Navy, commanding U. S. S. Anacostia, regarding captures by that vessel.

U. S. S. ANACOSTIA,
Piney Point, Potomac River, November 17, 1862.

SIR: In conformity with your suggestion, I ordered a boat expedition to St. George's Island, of which the enclosed certificate* of capture is the result. One of the prisoners, George Williams, was formerly pilot of this vessel, and who was discharged for cowardice at Fredericksburg, Rappahannock River, at the time of its evacuation.

I remain, very respectfully, your most obedient servant,

NELSON PROVOST,
Acting Master, Commanding.

Lieutenant-Commander E. P. MCCREA,
Adjutant Potomac Flotilla.

Report of Commodore Harwood, U. S. Navy, commanding Potomac Flotilla, regarding precautions against designs of the enemy upon U. S. vessels in waters of Virginia.

COMMANDANT'S OFFICE, NAVY YARD,
Washington, November 18, 1862.

SIR: Your letter† of yesterday, transmitting information from Captain Case of the designs of the enemy to surprise some of our steamers in the waters of Virginia was immediately forwarded to the officers commanding divisions of the Potomac Flotilla, in order that no precaution may be neglected against such attempts.

Owing to the habits and imperfect military training of the majority of the subordinate volunteer officers, which renders them less vigilant after the fatigues of extra duty than if they had been brought up in the Navy, a successful attack on the smaller vessels of the flotilla might be expected, and has been anticipated by furnishing those stationed on the lower Potomac with boarding nettings, and putting commanding officers on their guard.

More master's mates of good habits are much wanted. Those who do conduct themselves with propriety are, in some of the vessels, overworked between the duty on board and that of rowing guard at night.

I have the honor to be, with great respect, your obedient servant,

ANDW. A. HARWOOD,
Commodore, Commanding Potomac Flotilla.

Hon. GIDEON WELLES,
Secretary of the Navy.

---

* Not found.

† See p. 140.

Report of Lieutenant-Commander McCrea, U. S. Navy, commanding Second Division Potomac Flotilla, of trunks found in Herring Creek.

U. S. S. JACOB BELL,
Potomac Flotilla, November 18, 1862.

SIR: I have the honor to report that one trunk partially filled with pipes and pins, and one partially filled with felt hats, also 1,000 pair of wool combs, were picked up floating off Herring Creek. I respectfully suggest, as they do not come under the prize law, not having been captured, that they may be sold at private auction for the benefit of the flotilla.

I am, sir, very respectfully, your obedient servant,

E. P. MCCREA,
Lieutenant-Commander and Adjutant.

Commodore A. A. HARWOOD,
Commanding Potomac Flotilla, etc., Washington Navy Yard.

Report of Lieutenant-Commander McCrea, U. S. Navy, commanding Second Division Potomac Flotilla, of capture made by U. S. S. Cœur de Lion.

U. S. S. JACOB BELL, POTOMAC FLOTILLA,
Off Blakistone Island, November 18, 1862.

SIR: I have the honor to report the capture last night by the guard boat from the *Cœur de Lion* of six white prisoners (male), crossing from Virginia to Maryland, having upon their persons about $21,000. I forward all this day.

Names given by prisoners: Louis A. McLean, E. V. Stuart, William T. Littlepage, Hugh Rice, J. Wilson Hodges, A. B. Jones, J. S. Wallace. Two colored men, boatmen.

Very respectfully, your obedient servant,

E. P. MCCREA,
Lieutenant-Commander, Second Division Potomac Flotilla.

Commodore A. A. HARWOOD,
Commanding Potomac Flotilla.

E. V. Stuart, North Carolina State bonds	$9,000
William T. Littlepage, Virginia State bonds, $1,000, $6,000, $500	7,500
Hugh Rice, not described	6,481
J. Wilson Hodges, in specie	1,228
A. B. Jones, Virginia State bonds	1,000
	25,209

Report of Captain Dungan, U. S. Revenue Marine, commanding U. S. revenue steamer Hercules, in response to request from the Secretary of the Treasury for information regarding shots fired by that vessel over the town of Urbana, Va., November 18, 1862.

U. S. REVENUE STEAMER HERCULES,
Baltimore, Md., December 29, 1862.

SIR: I have the honor of acknowledging the receipt of your letter of December 16, 1862, asking the particulars of the occasion when we threw three shot over the town of Urbana on the Rappahannock River.

At 10 a. m., November 18, on my way up the Rappahannock I communicated with the mortar boat *No. 12*, and received information of a small battery being near the town of Urbana. Also a request from the captain of the mortar boat that I would ascertain the truth of the report. At 3:15 p. m. the same day I called all hands to quarters and stopped the steamer a half mile off the town of Urbana. We fired one shot over the place, which fell in the woods at least 1 mile beyond the town. We expended the other two shots at a bluff point which made well out into the river, for the purpose of trying the range of the gun. Finding no battery I proceeded toward the mouth of the river. My object in carrying out the request of Captain [Benj. C.] Dean, of the mortar boat *No. 12*, the commanding officer of the station, was solely for the protection of the Government transport, which shortly after was ordered up the Rappahannock.

The only steamer which Captain Dean had at that time under his command had gone to the Potomac for coal.

I remain, very respectfully, your obedient servant,

T. M. DUNGAN,
Captain, U. S. Revenue Marine.

Hon. S. P. CHASE,
Secretary of the Treasury, Washington City, D. C.

Report of Commodore Harwood, U. S. Navy, commanding Potomac Flotilla, transmitting report of Acting Master Dean, U. S. Navy, commanding U. S. schooner Dan Smith, regarding shots fired over the town of Urbana, Va., by U. S. revenue steamer Hercules.

COMMANDANT'S OFFICE, NAVY YARD,
Washington, January 14, 1863.

SIR: Referring to the letter of Captain T. M. Dungan, of the U. S. Revenue Service, to the honorable the Secretary of the Treasury, dated December 29, a copy of which was forwarded to me by the Department, I beg leave to report that Lieutenant-Commander McCrea was instructed to show Captain Dungan's letter to Acting Master Dean, commanding the U. S. schooner *Dan Smith*.

Acting Master Dean's reply is herewith enclosed, by which the Department will perceive that the accounts of Captain Dungan and Acting Master Dean do not agree; that Captain Dungan brought a person by the name of Billups from Baltimore to assist him in bringing away his family from Virginia; that he (Captain Dungan) communicated his purpose to Acting Master Dean, who made no objection, though, if he had performed his duty, he would have allowed no communication with the Virginia shore without consulting me, or at least referring the case to the commander of the division to which he belonged.

Mr. Dean's error in the point just adverted to proceeded, I believe, from inexperience and not from intention; he did not, however, according to his own account, authorize the firing on Urbana by the revenue cutter.

Other complaints have reached me of the interference of the revenue cutters in the limits of my command.

I have replied to such reports that some particular act must be alleged in order to draw official attention to the subject. I think, however, it would be useful that the naval officers should be made aware

of the duties to which officers of the revenue service are limited, in order that there may be no unnecessary and unpleasant collision.

I have the honor to be, with great respect, your obedient servant,

ANDW. A. HARWOOD,
Commodore, Commanding Potomac Flotilla.

Hon. GIDEON WELLES,
Secretary of the Navy, Navy Department.

[Enclosure.]

U. S. SCHOONER DAN SMITH,
Station G, St. Mary's River [Md.], January 8, 1863.

SIR: I would most respectfully state, in regard to the U. S. revenue steamer *Hercules*, Captain Dungan came on board my vessel at Windmill Point, Rappahannock River, and brought a young man by the name of B. F. Billups, from Baltimore, desiring me to take him on board my vessel, stating he wished to assist the gentleman in getting his wife and child from Virginia, as he resided in Baltimore, and whilst on board my vessel he stated he wished me to take the gentleman on board my vessel. I told him I would do so. He then asked me to go on board his vessel, as Mr. Billups wanted to get his carpetbag, and whilst on board his vessel he asked me if there was any watering place handy to get water. I stated that I had just been up around the point and filled my water casks. And whilst on board his vessel he asked me if I had any objection to his going up the river; and supposing he only intended to go as far as Mosquito Point [Va.], I answered him no, but at the same time told him that he had better be careful as I had heard that there was a battery at Urbana, never supposing for a moment that he intended firing a shot or resorting to any unlawful act of violence. About 7 o'clock in the evening he came back, and two of his officers came on board and informed me that he had fired three shot into Urbana. I was astonished. The officers also told me that they tried to persuade [dissuade] him from firing at the time and that they told him he was doing wrong.

The above are the facts as nearly as I can remember without the dates.

Sir, I remain, very respectfully, your obedient servant,

BENJ. C. DEAN,
Acting Master, Commanding.

Lieutenant-Commander E. P. MCCREA,
Lieutenant-Commander, and Adjutant Potomac Flotilla.

Report of Commodore Harwood, U. S. Navy, commanding Potomac Flotilla, forwarding report of operations of the Second Division of his command.

COMMANDANT'S OFFICE, NAVY YARD,
Washington, November 21, 1862.

SIR: Lieutenant-Commander E. P. McCrea has forwarded reports of the following operations of the Second Division of the Potomac Flotilla:

First. The seizure by Acting Master Babcock, of the U. S. schooner *T. A. Ward*, of a seine boat and a sloop in St. Jerome's Creek, Maryland, with contraband merchandise and six prisoners, engaged in violating the blockade.

Their names and the list of goods, with other particulars, are contained in the enclosed certificate of capture.

Second. The arrest of John H. Robrecht, Vincent Crab, Enery Hadley, and George Williams, and seizure of two canoes and a quantity of contraband goods at St. George's Island, by Acting Master's Mate G. P. St. John in the second cutter of the *Anacostia*.

Williams has been recognized on board the *Anacostia* and by Mr. Robert Walter, master pilot of this yard, as a pilot recently in the service of the United States, who was discharged for cowardice at Fredericksburg, at the time of its evacuation. He endeavored to mislead the party in their search for Robrecht, and when arrested himself used the most abusive and disloyal language. Robrecht is reported by Lieutenant-Commander McCrea as having been engaged largely for some time sending goods to Virginia.

Third. The arrest by the guard boat of the *Cœur de Lion*, of six white and two colored men crossing from Virginia to Maryland. They had upward of $25,000 with them, as will be seen by the enclosed copy of Lieutenant-Commander McCrea's report.*

The prisoners have been placed in custody of the provost-marshal, and the money, as in other similar cases, in hands of the district attorney.

I enclose Lieutenant-Commander McCrea's report,† in relation to the capture by boats of the *T. A. Ward*, already mentioned, as it confirms the opinion, before expressed to the Department, that more vessels are required to create an effective blockade.

I have the honor to be, with great respect, your obedient servant,

ANDW. A. HARWOOD,
Commodore, Commanding Potomac Flotilla.

Hon. GIDEON WELLES,
Secretary of the Navy.

[Enclosure.]

Potomac Flotilla.—Certificate of capture.

Name and character of prize.—Seine boat; no name. Sloop *G. W. Green*. Prisoners: R. W. Browning, Richmond, Va.; William Willis, Baltimore, Md.; Hugh Spencer, Maryland; Captain L. Jones, Baltimore, Md.; H. B. Hodges, Baltimore, Md.; Joseph Daiger, Baltimore, Md.

By whom and by what vessel captures made.—Acting Master W. L. Babcock, U. S. schooner *T. A. Ward*.

When captures made.—November 16, 1862.

Where and for what reasons.—St. Jerome's Creek, Md.; attempting to violate blockade.

The cargo, if any on board.—Eighteen boxes, 5 packages, 1 trunk, 6 valises, 2 boxes shoes, 4 cans castor oil, 9 cases shoes, 3 cases boots, 3 cases hats.

Remarks.—Having received information from the provost guard of St. Mary's County, Md., that the within-mentioned prisoners and prizes were in St. Jerome's Creek waiting for a favorable opportunity to cross to the Virginia shore, I proceeded to the creek and captured them. Seine boats destroyed as useless. Sloop detained for ship's use.

---

* See p. 158. † See p. 156.

U. S. SCHOONER T. A. WARD, *November 16, 1862.*

I hereby certify that the above-mentioned prisoners and prizes were captured by the undersigned, commanding the U. S. schooner *T. A. Ward*, of the Potomac Flotilla, at the time and place above designated, and that the above and annexed statement is true in every particular.

W. L. BABCOCK,
Acting Master.

Report of Lieutenant-Commander Magaw, U. S. Navy, commanding First Division Potomac Flotilla, regarding prisoners.

U. S. S. FREEBORN, POTOMAC FLOTILLA,
Off Aquia Creek, November 21, 1862.

SIR: In obedience to your orders of the 14th instant, I have arrested Curtis Grimes and Penny Grimes, of King George County, Va. I send them on the *Satellite*, together with some other prisoners arrested for violating the blockade.

Very respectfully, your obedient servant,

SAMUEL MAGAW,
Lieutenant-Commander, etc.

Commodore ANDW. A. HARWOOD,
Comdg. Potomac Flotilla and Navy Yard, Washington, D. C.

Order of the Secretary of the Navy to Commodore Harwood, U. S. Navy, commanding Potomac Flotilla, transmitting correspondence regarding cooperation for opening communication with the Army at Fredericksburg, Va.

NAVY DEPARTMENT, *November 21, 1862.*

SIR: The enclosed letters from Major-General Halleck and Quartermaster-General Meigs are referred to you for action. The seizure of boats requested in General Meigs's letter can be made, turning them over to the quartermaster at Aquia Creek and taking his receipt therefor.

You are also authorized to move a sufficient force of gunboats up the Rappahannock to open communications with the military force in the neighborhood of Fredericksburg.

Send a prudent officer in command.

Very respectfully,

GIDEON WELLES,
Secretary of the Navy.

Commodore A. A. HARWOOD,
Commandant Navy Yard, Washington.

[Enclosures.]

HEADQUARTERS OF THE ARMY,
Washington, November 21, 1862.

SIR: Your note of this morning is received. If it is desirable that the Rappahannock should be opened as early as possible for quartermaster vessels for the supply of the Army at Fredericksburg, I will notify you as soon as the heights below that town are occupied by our forces. I return General Meigs's letter herewith.

Very respectfully, your obedient servant,

H. W. HALLECK,
General in Chief.

Assistant Secretary FOX, *Navy Department.*

[Subenclosure.]

QUARTERMASTER-GENERAL'S OFFICE,
Washington City, November 21, 1862.

DEAR SIR: There are a large number of fishing boats on the various landings on the Potomac. Rowboats of light draft and great breadth and burden, used for carrying heavy seines.

These I believe were generally seized by the Navy. If they are now in possession of the Government, they will be very useful at Belle Plain and Aquia Creek, where the attempt is being made to land the stores for a large army on a beach without docks.

Can they be sent to that place?

Please advise me as soon as the Rappahannock is so occupied by the gunboats as to make it safe to send vessels loaded with stores direct to Fredericksburg.

I doubt the possibility of feeding the Army and its forage with this weather, by landing on the shoal beaches of Aquia Creek and Belle Plain.

I am, respectfully, yonr obedient servant,

M. C. MEIGS,
Quartermaster-General.

Hon. G. V. FOX,
Assistant Secretary of the Navy.

QUARTERMASTER-GENERAL'S OFFICE,
Washington City, November 21, 1862.

SIR: Herewith, please find enclosed a copy of a telegraphic dispatch of this date from Colonel Rufus Ingalls, chief quartermaster Army of the Potomac, at Falmouth, Va., to the Quartermaster-General, conveying General Burnside's wishes that some light-draft vessels be held in readiness, laden with supplies, at the mouth of the Rappahannock, to be towed up when required by or under convoy of gunboats.

Colonel Rucker, chief quarter[master] at this post, has been ordered to arrange his transportation accordingly.

Please consider this in connection with my letter to you of this morning.

I am, very respectfully, your obedient servant,

M. C. MEIGS,
Quartermaster-General.

Hon. G. V. FOX,
Assistant Secretary of the Navy.

[Subenclosure.—Telegram.]

HEADQUARTERS ARMY OF POTOMAC,
Camp near Falmouth, Va., November 21, 1862.
(Received 10:10 a. m.)

General Burnside thinks that some light-draft vessels should be laden with supplies and held in readiness at the mouth of the Rappahannock, to be towed up when required by or under convoy of gunboats. The roads are already very bad. The pontoons for the bridges over this river should be towed up by gunboats to expedite matters. The depots at Aquia Creek and Belle Plain are working efficiently.

All horses sent hereafter should come direct to Aquia. Please send as many horses and mules as possible within the limits stated in my letter.

RUFUS INGALLS,
Lieutenant-Colonel, A. D. C., Chief Quartermaster.

General M. C. MEIGS,
Quartermaster-General.

[Telegram.]

NAVY YARD, WASHINGTON,
November 22, 1862—10:20 a. m.
(Received 10:21 a. m.)

Can you give me an idea of the force required to convoy the army vessels in the Rappahannock?

I am very hard up for the proper craft for the blockade now. *Currituck* is in repair lying at the yard for want of engineers, two of hers having deserted.

Please answer.

A. A. HARWOOD,
Commandant.

Hon. G. V. FOX,
Assistant Secretary of the Navy.

[Telegram.]

NAVY DEPARTMENT, *November 22, 1862.*

I suppose the only thing to be feared is the riflemen on the heights just below Fredericksburg, and before those are passed the Army must clear them.

G. V. FOX.

Commodore A. A. HARWOOD,
Commandant Navy Yard, Washington.

[Telegram.]

NAVY DEPARTMENT, *November 23, 1862.*

Have the boats left for the Rappahannock? If not, dispatch them at the earliest moment.

GIDEON WELLES,
Secretary of the Navy.

Commodore A. A. HARWOOD,
Commandant Navy Yard, Washington.

[Telegram.]

HDQRS. ARMY OF THE POTOMAC,
November 22, 1862—9 p. m.
(Received at Washington 9:15 p. m.)

Will it be possible for you to send two or three gunboats up the Rappahannock River to cooperate with this army?

A. E. BURNSIDE,
Major-General, Commanding.

Hon. GIDEON WELLES,
Secretary of the Navy.

[Telegram.]

NAVY DEPARTMENT, *November 23, 1862.*

A force of gunboats was ordered yesterday to ascend the Rappahannock and open communication with your army. I suggest that you send a force to clear the high banks of the river below Fredericksburg of the enemy's sharpshooters.

GIDEON WELLES,
Secretary of the Navy.

Major-General BURNSIDE,
Headquarters Army of the Potomac.

[Telegram.]

NAVY YARD, WASHINGTON,
November 23, 1862—11:45 a. m.
(Received 12 m.)

Orders with instructions were sent Lieutenant-Commander McCrea yesterday afternoon by the *Baltimore*, and most likely have reached him by this. The *Currituck* left this morning but has returned disabled. I shall dispatch the *Leslie* at once, with orders for the *Anacostia* to take her place.

A. A. HARWOOD,
Commodore.

Hon. SECRETARY NAVY.

Report of Acting Master Dockray, U. S. Navy, commanding U. S. S. Reliance, regar[illegible] [illegible]e chase of suspicious longboat.

U. S. S. RELIANCE,
Off Alexandria, November 23, 1862.

SIR: Your instructions by Acting Master's Mate Walters have been received and will be strenuously observed. The reason of my sending the two schooners to the yard was on account of your verbal orders to me not to let too large quantities of goods pass.

I very much need a field howitzer for the afterpart of this vessel, for, when heading to the ebb or flood tide, it is impossible to bring a vessel to with the bow gun, owing to the manner in which it is pivoted.

My boat that returned from the yard this morning is now rowing in chase of a longboat that stood under the Maryland shore. Was hailed three times and had three shot fired at her with a rifle, to neither of which they paid any attention. I have ordered the boat to bring her back if they were obliged to follow her to the mouth of the river.

A boat for this vessel is being finished at the yard. Will you please direct to have her furnished with mast and sail, yoke and tiller, as also every complete appurtenance?

With such a leading breeze and tide a rowboat has hard work. If our boat is successful in catching this run of the guard, I shall send same to the yard for condemnation.

Very respectfully, your obedient servant,

W. P. DOCKRAY,
Commanding Guard Vessel, off Alexandria.

Commodore ANDREW A. HARWOOD,
Commanding Potomac Flotilla, Washington Navy Yard, D. C.

Report of Acting Master Dockray, U. S. Navy, commanding U. S. S. Reliance, of the capture of longboat New Moon.

U. S. S. RELIANCE, GUARD VESSEL,
Off Alexandria, November 24, 1862.

SIR: My boat and men returned this morning, bringing with them the longboat *New Moon*, which ran by us yesterday p. m., being hailed three times, and having three rifle shots fired at her, each one of which struck within a few feet of her. I got a schooner bound down to take our boat in tow, and they succeeded in getting ahead of the longboat at Washington Reach. She was there hailed by them and ordered to heave to, but refused, when a rifle shot across her was fired from the boat. They finally succeeded in getting her. Mr. Cole, first-class fireman, had charge of my boat, and has done himself a great deal of credit for the promptness and energy displayed in carrying out my orders. He, with the boat's crew accompanying the longboat, goes to the yard for examination by you, and from whom you will learn all the facts.

Very respectfully, your obedient servant,

WM. P. DOCKRAY,
Acting Master, Commanding.

Commodore ANDREW A. HARWOOD,
Commanding Potomac Flotilla, Washington Navy Yard.

P. S.—There is a man on board the *New Moon* under very suspicious circumstances. His name, I think, is Trask, judging from an old pass in his possession. I send all the papers found with this.

Very respectfully, your obedient servant,

W. P. DOCKRAY,
Acting Master, Commanding U. S. S. Reliance.

Letter from Commodore Harwood, U. S. Navy, commanding Potomac Flotilla, to the Assistant Secretary of the Navy, regarding cooperation with the army at Fredericksburg, Va.

COMMANDANT'S OFFICE, NAVY YARD,
Washington, November 24, 1862.

DEAR SIR: By the *Leslie* I learn that the *Anacostia* had gone for the Rappahannock before my last order reached McCrea.

Here are his dispatches to me:

SUNDAY, 6:15 p. m.

Sir: The gunboats will leave immediately.

7 p. m.

I hope to be in Fredericksburg on Tuesday morning.
In haste, E. P. MCCREA.

I am afraid that not many seine boats can be furnished, as we are in the habit of breaking them up to prevent the contrabandists from using them.

I have given orders that as many as are on hand or can be seized are to be sent to the army people, as directed by the Department.

Yours, in haste,

ANDW. A. HARWOOD.

Hon. G. V. FOX.

P. S.—I hope you will advertise officers who desert. Many a man has been shot for that same.

Report of Acting Ensign McConnell, U. S. Navy, U. S. S. Jacob Bell, of a visit to the house of James Raley, near Patuxent River.

U. S. S. JACOB BELL,
Patuxent River, November 24, 1862.

SIR: According to your orders of to-day I proceeded to the house of Mr. James Raley, which I found to be about 3 miles back from the Patuxent River, and enquired of him what had occurred at his house the night before.

He stated that at a late hour on Sunday night he was awakened by an officer and two white men, accompanied by two negroes. The officer said he had been informed that he (Raley) had a rebel flag in the house, and he was going to search for it. After overhauling and tearing some of his wife's and children's clothes without finding anything, the officer asked for all the written papers about the house, and after seeing them informed Raley that there was some $17,000 worth of goods marked on them, and that he would be back the next day at 12 to arrest him. The officer then left, taking about a pound of shot and 3 ounces of powder, which he had in the house, and would have taken his gun, but one of the men persuaded him not to. The house was visited twice afterwards during the night, and the party said they had searched six other houses on the road. I found Mr. Raley to be a very poor and ignorant man, not knowing how to read or write, and living in great wretchedness. I apologized to him for the conduct of the officer, and returned the papers, shot, and powder as you directed.

I am, very respectfully, your obedient servant,

G. E. MCCONNELL,
Acting Ensign.

Acting Master W. T. STREET.

Report of Commodore Harwood, U. S. Navy, Commanding Potomac Flotilla, transmitting certificate of capture made by U. S. S. Anacostia.

COMMANDANT'S OFFICE, NAVY YARD,
Washington, November 25, 1862.

SIR: I enclose the certificate* of the capture made of two canoes and their contraband cargoes by the boats of the *Anacostia* on the 17th instant, mentioned in my report of operations of the flotilla on the 21st instant.

The goods and certificate were received by the *Leslie* this morning.

I forward also captures made on the 8th and 14th instant of the following persons:

John H. Brown, Joseph Masenger, both arrested in passing from Virginia to Maryland.

The following is a list of the names of prisoners captured by the guard boat from the *Cœur de Lion*, crossing from Virginia to Maryland, and referred to in my letter to you of 21st instant:

Louis A. McLean, E. V. Stewart, W. T. Littlepage, Hugh Rice, J. Wilson Hodges, A. B. Jones, and J. S. Wallace.

I have the honor to be, very respectfully, your obedient servant,

ANDW. A. HARWOOD,
Commodore, Commanding Potomac Flotilla.

Hon. GIDEON WELLES,
Secretary of the Navy, Navy Department.

---

*Not found.

Report of Acting Master Dockray, U. S. Navy, commanding U. S. S. Reliance, referring case of captured skiff.

U. S. S. RELIANCE,
Off Alexandria, Va., November 25, 1862.

SIR: I send accompanying this a large skiff boat, containing 4 barrels whisky, with the two men captured in her.

She was hailed and brought alongside at 9:30 p. m., 24th instant.

The men state they were hired to row it down here from Sixth street wharf, Washington, and put it on board a sloop off Alexandria, but are unable to give the name of the vessel they were to deliver it to, or the parties in Washington who sent them with it. In fact, they know nothing about it. Under the above circumstances I deem it best to refer the case to you for adjustment.

Very respectfully, your obedient servant,

W. P. DOCKRAY,
Acting Master, Commanding.

Commodore ANDREW A. HARWOOD,
Commanding Potomac Flotilla, Washington Navy Yard.

Weekly report of Lieutenant-Commander Magaw, U. S. Navy, commanding First Division Potomac Flotilla.

U. S. S. FREEBORN, POTOMAC FLOTILLA,
Off Aquia Creek, November 26, 1862.

SIR: I have the honor to submit my weekly report:

Nothing has occurred worthy of note. Matters on shore at the quartermaster's and commissary departments of the Army at this point and Belle Plain are progressing finely. We have been of much assistance to them, and they appear to have no anxiety.

I applied for an army signal officer to the commanding officer of the post, but they had none. One or two have actually been sent to me, when cooperating with the Army. I hope to have one to-day, for, if an attack should be made, we might fire into our own troops.

I beg permission to make some transfers of officers in my division—master's mates who have not been ordered by the Department. It will add to the efficiency of the flotilla.

Lieutenant-Commander McCrea, at my suggestion, went over to Falmouth to see Major-General Burnside and have an understanding before going up the Rappahannock. He (McCrea) left Belle Plain before daylight yesterday. I send General Burnside's telegram* to me at this place.

The arrests which you ordered have not yet been made (except Custis and Penny Grimes), because I am doubtful as to whether I should go below here until the affair of the city of Fredericksburg is settled.

Since writing the above I have seen Major-General Burnside. He was at the creek to-day. We have a perfect understanding.

I had also the pleasure of spending an half hour with his Excellency the President.

Your communication in relation to taking army coal is received.

I send by this mail the application of Acting Master Plunkett; he is a gallant officer, and I hope he may have the *Currituck*, if she is in your gift.

---

*Not found.

Lieutenant-Commander McCrea will not go up the Rappahannock above Port Royal without further information, etc., from General Burnside.

Very respectfully, your obedient servant,

SAMUEL MAGAW,
Lieutenant-Commander.

Commodore ANDW. A. HARWOOD,
Comdg. Potomac Flotilla and Navy Yard, Washington, D. C.

Report of Commodore Harwood, U. S. Navy, commanding Potomac Flotilla, regarding men captured on longboat New Moon.

COMMANDANT'S OFFICE, NAVY YARD,
Washington, November 26, 1862.

SIR: I enclose herewith a permission for the longboat *New Moon* to bring wood and grain to and fro on the Potomac River, given by the Department last March, and also a permit given by myself in September.

The *New Moon* was seized in the attempt to go down the river without a pass, her drunken master refusing to stop, although several shots were fired at him to bring him to.

His papers were regular from the custom-house, but he had three more persons on board the vessel than were found in the crew list.

Two of these extra hands, who were without passes to go down the river, were discharged from the old capitol prison in August, upon taking the oath of allegiance. They say they were employed by the master of the *New Moon* to cut wood. The third had been an army teamster, an individual of very unprepossessing appearance, who could give no satisfactory account of himself.

I have committed the persons found on board the vessel to the custody of the provost-marshal, and the papers to the district attorney.

I have the honor to be, with great respect, your obedient servant,

ANDW. A. HARWOOD,
Commodore, Commanding Potomac Flotilla.

Hon. GIDEON WELLES,
Secretary of the Navy.

Report of Commodore Harwood, U. S. Navy, commanding Potomac Flotilla, with enclosure, regarding coal.

COMMANDANT'S OFFICE, NAVY YARD,
Washington, November 27, 1862.

SIR: I enclose a copy of my letter of the 18th instant, requesting the navy agent at Philadelphia to supply the coal required for the Potomac Flotilla.

Lieutenant-Commander McCrea writes that he has written two weeks ago to the agent to send the coal, but none has arrived. I have sent a telegram to Mr. Chambers to hurry on the supply.

I take the opportunity to inform the Department that whatever interference may have taken place with the coal transports of the Army, it must be imputed to the necessity of moving immediately to the support of the Army.

which. In fact, the general internal routine of the vessels is so complicated in regard to leaves of absence that I hesitate to report officers, but would rather state the facts. As adjutant, it is extremely difficult to state the actual occurrences of the flotilla for the vessels, or acts committed by their officers, when it seems almost impossible to get reports in detail from the commanding officers. I would state two instances: I understand during a fight inshore at Piankatank that one of the master's mates, or an officer in the expedition, deserted his boat and returned to his vessel in a canoe. Again, that the revenue steamer *Hercules* was permitted to pass the vessels at the mouth of the Rappahannock, when she proceeded up the river and threw three shells into the unoffending town of Tappahannock [Urbana].* These are facts that come to me indirectly, days or weeks after their occurrence, and render it somewhat difficult for me to use them. I would, though, now respectfully suggest that the commanding officer of the said steamer *Hercules* be arrested and severely punished—dismissed, if possible, for so flagrant an outrage. I would also suggest that an order be given by the honorable the Secretary of the Navy that the revenue vessels are not to come in the waters within the limits of your command, except in cases of stress of weather, or disabled; for they are impudent and careless, and their acts, good or bad, go to the credit of the Potomac Flotilla.

I trust that [there is] nothing in this, my dispatch, but the proper report of opinions of me, your adjutant, and with all respect due to you, my commander in chief, I earnestly hope you will dispatch coal and provisions. I do not know how long I shall remain here, as I am waiting instructions for cooperating with the Army.

I am, sir, very respectfully, your obedient servant,

E. P. McCREA,
Lieutenant-Commander and Adjutant.

Commodore A. A. HARWOOD,
Commanding Potomac Flotilla, etc.

Unofficial report of Lieutenant-Commander McCrea, U. S. Navy, commanding Second Division Potomac Flotilla, regarding the urgent need of coal.

U. S. S. JACOB BELL, *November 28, 1862.*

MY DEAR COMMODORE: I send this by an aid to headquarters for mailing. We are in a tight place, should we get the worst of it. I think from Tappahannock to this place there should be a line of gunboats to prevent batteries being erected below us and to guard our supplies. The storeship must come up immediately. We might fill up for six weeks and send her directly back, but coal we must constantly have. It is a bad river to send such boats as these, carrying six days' coal. I should think some of the regulars should be here.

The contraband trade is hardly working now across the Potomac, and I think the *Yankee* could be sent here, and Aquia Creek held by the mortar schooners and one steamer; it is so important to have sufficient force here.

I sent the *Dragon* to seize a coal vessel and bring her here. I will send her out the river as soon as we are filled up; she may not be successful in finding one, and we must wait one from you.

In the confusion of the move to this point I was obliged to go on board the *Currituck* from the *Ella*, the *Jacob Bell* being absent. All

---

*See pp. 158-160.

my things are on board the *Ella*, as I had moved on board the day before I received your order to visit all the vessels. I have nothing with me but a clean shirt. Should the *Ella* be sent from your command (transferred), would you do me the favor to have my things stored at the yard till they can reach me? She might come around here with the gunboat and go back with the *Wyandank*. She has her ordnance on board, which I presume we will need shortly. Please send as many cartridges as shell, etc.

The enemy's pickets are a few yards from us, constantly on the pier at Port Royal, but no trouble as yet. I will communicate with you as soon as possible again.

Very truly, yours,

E. P. McCREA.

[Commodore A. A. HARWOOD, U. S. Navy,
Commanding Potomac Flotilla.]

[Telegram.]

NAVY YARD, WASHINGTON, D. C., *November 28, 1862.*
(Received 1:45 p. m.)

McCrea telegraphs from Port Royal on the Rappahannock River that the gunboats need coal immediately, some having only one day's [supply]. No supply has been received on the lower Potomac from Philadelphia, and I have no answer either to letters or telegrams from the agent. Provisions are needed. Shall the *Wyandank* move round to the Rappahannock?

A. A. HARWOOD,
Commodore.

Hon. SECRETARY OF THE NAVY.

[Telegram.]

NAVY DEPARTMENT, *November 28, 1862.*

Send the *Wyandank* round to the Rappahannock, and if the army vessels there have coal, apply to General Burnside for a supply.

GIDEON WELLES.

Commodore A. A. HARWOOD,
Commandant Navy Yard, Washington.

[Telegram.]

NAVY YARD, WASHINGTON, *November 28, 1862.*
(Received 3:15 p. m.)

The *Satellite* will be ready to leave the yard by 8 o'clock to-morrow. I will send orders to the *Wyandank* to go round to the Rappahannock, provision the gunboats there and return, and for any coal vessels from Philadelphia which are due to be towed round also. If the Department can insure an immediate supply of coal for the gunboats from any quarter it will be well. I have no dispatch vessel or I would send the order this afternoon.

A. A. HARWOOD,
Commodore.

Hon. G. V. FOX,
Assistant Secretary of the Navy.

[Telegram.]

NAVY DEPARTMENT, *November 28, 1862.*

Take any vessels you have or can charter and load them with coal from the navy yard and send to our vessels, provided General Burnside can not furnish. Are the depots you have in the Potomac furnished with any coal? If so, how much?

GIDEON WELLES.

Commodore HARWOOD,
Navy Yard, Washington, D. C.

[Telegram.]

NAVY YARD, WASHINGTON, *November 28, 1862.*
(Received 5:15 p. m.)

The depots in the Potomac ought to have coal, but I have had no returns. I have directed Lieutenant-Commander Magaw to tow the vessels which ought to be coming from Philadelphia round to the Rappahannock as they arrive. I have no vessels here, but will endeavor to charter some. *Satellite* will leave the yard at 8 a. m.

A. A. HARWOOD,
Commodore.

SECRETARY NAVY.

[Telegram.]

NAVY YARD, WASHINGTON, *November 29, 1862.*
(Received 2:36 p. m.)

Mortar schooners on the Potomac: *Adolph Hugel*, Aquia Creek; *Dan Smith*, Posey's Bluff; *G. Mangham* guard vessel, Piney Point; *T. A. Ward*, Breton's Bay. All but the last have recently come round from Baltimore, where I understand they were repaired.

A. A. HARWOOD.

Hon. SECRETARY OF THE NAVY.

Report of Lieutenant-Commander Magaw, U. S. Navy, commanding First Division Potomac Flotilla, regarding coal and other matters.

U. S. S. FREEBORN,
Off Aquia Creek, November 29, 1862.

SIR: I have the honor to acknowledge the receipt of your letter of yesterday, and enclosures.

I am not positive how many vessels Lieutenant-Commander McCrea took up the Rappahannock with him; four, I think. I hope to hear from him to-day from General Burnside.

The Army has two steamers between here and Washington, the *Wilson Small* and *Nellie Baker*. They leave foot of Sixth street at 8 a. m. and 1 p. m. In case you wish to communicate, you will find the masters of these boats obliging and careful.

I am sorry you should have been annoyed about coal and with complaints from the Army, whose vessels I have had occasion to assist

both with coal and otherwise very often. To my knowledge no coal has been taken from the Army except by Lieutenant-Commander McCrea the other night, and that was at my suggestion and a case of necessity. Then only 20 tons were taken from a schooner (aground) having some 200 tons on board.

1 o'clock p. m.—I have just received a message* from General Parke, which I enclose. Report says we had two squadrons of cavalry captured last night some place on the north fork of the Rappahannock.

Very respectfully, your obedient servant,

SAMUEL MAGAW,
Lieutenant-Commander.

Commodore ANDREW A. HARWOOD,
Comdg. Potomac Flotilla and Navy Yard, Washington, D. C.

Instructions from Commodore Harwood, U. S. Navy, commanding Potomac Flotilla, to Lieutenant-Commander McCrea, U. S. Navy, commanding Second Division, regarding the affairs of his command.

NAVY YARD, WASHINGTON, *November 30, 1862.*

SIR: Your letter of the 27th instant from Port Royal has been received.

I had received previously intelligence of your want of provisions and coal and sent orders that the *Wyandank* should immediately proceed to the Rappahannock, supply the vessels with provisions, and return.

I wish you to send her back as soon as her mission has been accomplished. With regard to coal, there seems to have been some delay in forwarding that article from Philadelphia, arising from a change in the persons charged with that duty.

Captain Henry A. Adams has been appointed as general agent for the purpose, and a supply for the depots on the river is now on its way.

I have sent an order to tow the first vessel that arrives at the mouth of the Potomac to the Rappahannock at once.

I have written to Lieutenant-Commander Magaw to tell you to request General Burnside to supply your immediate wants if not otherwise met, and sent a telegram to you to the same effect. To make assurance doubly sure, have chartered a schooner capable of carrying 150 tons, which shall be put in here and towed round to you as soon as possible. She will leave this yard on Tuesday morning.

If, as I suppose may be the case, a greater quantity may reach you than you require, you will send the surplus back, with orders to land it on the most convenient coal wharf on the Potomac, taking care to send orders that a sufficient force be taken from any vessel of the flotilla to assist in unloading the transport, and thus lessen the expense of demurrage.

With regard to the supply of coal for the flotilla, I am aware that you used all proper exertion to provide for it in time, and if the letter of my instructions forbidding it to be taken from passing vessels was disregarded, the spirit of a later order to you to move at once to the Rappahannock for the protection of the army transport fully exonerated you from blame. Your action in the matter is therefore approved by me.

The absence of the paymaster and his steward, together with the circumstances attending it, were all made known to the Department on

---

* Not found.

her departure from the yard. The other irregularities you mention, including those in reference to the revenue vessels, shall be taken in hand.

I shall send the *Ella* to Aquia Creek to-morrow (December 1) and request Lieutenant-Commander Magaw to use her for general communication with the flotilla and to keep me advised of his and your movements.

Send me any intelligence you may think of interest by telegraph that I may keep the Department informed.

Very respectfully, your obedient servant,

ANDW. A. HARWOOD,
Commodore, Commanding Potomac Flotilla.

Lieutenant-Commander ED. P. MCCREA,
Commanding Second Division Potomac Flotilla.

P. S.—You will please explain why the ammunition called for by your telegram of the 25th instant, which was promptly supplied, was sent back in the *Ella*.

ANDW. A. HARWOOD.

Semiofficial report of Lieutenant-Commander Magaw, U. S. Navy, commanding First Division Potomac Flotilla, regarding affairs at Port Royal and Fredericksburg, Va.

U. S. S. FREEBORN,
Off Aquia Creek, November 30, 1862—7 p. m.

SIR: I have the honor to inform you that I have received word from General Sumner that the Army is in communication with McCrea by cavalry, with two battalions of light artillery.

Firing was heard to-day in the vicinity of (or direction of) Port Royal [Va.]. The Army is throwing up earthworks below Falmouth Station, commanding Fredericksburg, but no knowing when the fight may take place. I am going out to General Burnside's headquarters to-morrow for a few minutes.

I send Acting Master's Mate [Chas. F.] Watson up with Mr. W. H. Garner.

Very respectfully, your obedient servant,

SAMUEL MAGAW,
Lieutenant-Commander.

Commodore ANDREW A. HARWOOD,
Commanding Potomac Flotilla and Navy Yard, Washington.

Instructions from Commodore Harwood, U. S. Navy, commanding Potomac Flotilla, to Lieutenant-Commander Magaw, U. S. Navy, commanding First Division, regarding the affairs of his command.

NAVY YARD, WASHINGTON, *November 30, 1862.*

SIR: Yours of the 29th instant was received yesterday. A letter of Lieutenant-Commander McCrea reached me at the same time, by which I learn that he has with him the *Currituck*, *Anacostia*, *Cœur de Lion*, and *Dragon*.

I hope the quantity of coal he tells me he was obliged to take from the *Wyandank* has not delayed her in her trip to supply him with stores.

Coal is on its way from Philadelphia, and a cargo will leave here on Tuesday by a schooner chartered for the purpose, which I wish you to have sent under sufficient convoy to the Rappahannock, unless you know positively that a supply has reached the vessels in that river. In case of positive information on that head the schooner can be discharged at one of the coal wharves on the lower Potomac, but nothing short of certain information that a full supply has reached Lieutenant-Commander McCrea must interfere with the precautionary arrangement just mentioned. I should feel relieved by knowing that the *Wyandank* had been dispatched with the provisions.

If you are obliged to remain at Aquia Creek, send Acting Master Ives to see my orders promptly carried out and that all is going on right in the lower Potomac.

The *Teaser's* boiler was leaking, and I have kept her to tow the coal schooner down.

The complaint about the appropriation of army coal proceeded from a quartermaster in Alexandria, and came with a very bad grace from that quarter, as I had assisted him liberally.

I am sorry to find by the morning paper that your news of the capture of two squadrons of cavalry is confirmed.

Lieutenant-Commander Phelps reports that a party of his people on shore at Shipping Point saw two dismounted guns there, whether spiked or not they could not say. He says some rebel cavalry were seen in the vicinity. I wish you would look into this and at least render these guns unserviceable, as you can not tell at what moment they may be employed against you.

I place the *Ella* for the present at your disposal as a dispatch vessel.

Keep me informed of any matters of moment, both with regard to your command and whatever other intelligence you may receive from the Rappahannock.

Send another vessel with the tug and her tow in case of accident, with orders to return to their stations as soon as possible.

Very respectfully, your obedient servant,

ANDW. A. HARWOOD,
Commodore, Commanding Potomac Flotilla.

Lieutenant-Commander SAML. MAGAW,
Commanding First Division Potomac Flotilla.

Letter from Lieutenant-Commander Magaw, U. S. Navy, commanding First Division, to Commodore Harwood, U. S. Navy, commanding Potomac Flotilla, regarding affairs in vicinity of Fredericksburg, Va.

Private.] [U. S. S.] FREEBORN,
Aquia Creek, November 30, 1862.

DEAR SIR: Your letters by the *Satellite* are received. Do not give yourself any uneasiness in relation to coal. Your general order permits us to take it in an emergency from vessels in the river.

I have sent the *Wyandank* with stores and orders to take (if no flotilla coal vessel could be found) any coal schooner up to McCrea. We have had communication with McCrea, but by scouts. I will write him and send the letters to General Burnside, to be forwarded.

I sent you yesterday a telegram from General Parke, chief of staff. No coal had arrived at Plowden's wharf up to the evening of the 28th.

I send up Mr. Garner and enclose a letter from Plowden in relation to him.

If you can spare me the *Ella* I should like to have her.

Everything here is anxiety and expectation. The fight of the war will come off in the vicinity of Fredericksburg.

If you will send the two master's mates down to me I will see them properly distributed and report.

Commanding officer of the *Satellite* complained that his flues had not even been swept while at the yard. Upon questioning him I found that Mr. [Isaac] Johnson, his senior engineer, had been absent and without leave. The *Satellite's* fires were hauled for six days. I wish you would punish Mr. Johnson for neglect of duty.

The line of telegraph is now open from this point to Washington, and I will let you know by telegraph if anything of importance should occur.

I am suffering with nervous rheumatism, with fever.

Very respectfully, your obedient servant,

SAMUEL MAGAW,
Lieutenant-Commander.

Commodore A. A. HARWOOD,
Commanding Potomac Flotilla and Navy Yard, Washington.

General report of Commodore Harwood, U. S. Navy, commanding Potomac Flotilla, of affairs on the Potomac and Rappahannock rivers.

COMMANDANT'S OFFICE, NAVY YARD,
Washington, December 1, 1862.

SIR: I have received a letter from Lieutenant-Commander McCrea, dated November 27, in which he informs me that on the evening of that day he arrived at Port Royal, on the Rappahannock, with the *Currituck*, *Anacostia*, *Cœur de Lion*, and *Dragon*. He intended to go 6 miles farther up for an anchorage, but received a message from General Burnside desiring him to remain where he was until further orders.

A later telegram received through Lieutenant-Commander Magaw runs thus:

Lieutenant-Commander McCrea has arrived at Port Conway [Va.], all right.

Port Conway is opposite Port Royal. Lieutenant-Commander McCrea writes urgently for coal and provisions, which I hope have reached him by this time.

I have given orders that the first coal vessel which arrived from Philadelphia shall be towed round immediately to the Rappahannock, and to provide for contingencies, have chartered a schooner to carry a cargo round as soon as she can be loaded and dispatched.

The provision ship *Wyandank* was ordered round as soon as I was informed that the stock was getting low, and I presume by this time has reached her destination.

Lieutenant-Commander McCrea writes that he was delayed in reaching Port Royal by the very low tide of the river.

Both he and myself have urged the shipment of coal from Philadelphia in season, and recently, in answer to a telegram, I received the only reply from the navy agent which has reached either of us, which merely informs me that Captain Adams had been ordered by the Department to superintend the supply of coal.

Admiral Foote has given me such directions on the subject as will prevent future embarrassment on this account.

Lieutenant-Commander McCrea reports that Paymaster Yorke, of the *Currituck*, sent his steward home without the knowledge of his commanding officer, and that the provision of that vessel, which left the yard recently, was running low. Mr. Yorke, while awaiting a medical survey, expressed unwillingness to send in his requisition for provisions, expecting to be condemned and not wishing to incur a responsibility which he could avoid, but was informed that he could not be exonerated from this duty until his case was decided.

Complaint is made of a general want of arrangement in the affairs of his department.

A report has reached me that the revenue steamer *Hercules* went up the Rappahannock and threw three shells into the town of Tappahannock [Urbana].* As there appears no good object gained by proceedings like this, and it appears to have been done without reference to superior military or naval authorities, I have thought it my duty to report the circumstances to you, in order to prevent officers from coming within the limits of my command and acting without reference to those who are deputed by me to execute your orders. Any mere act of wantonness or unnecessary destruction committed by a vessel carrying guns would be naturally imputed to the flotilla, and I feel assured if the commander of the *Hercules* had been ordered to cooperate with the Navy, his instructions to do so would have been made known to me.

I have the honor to be, with great respect, your obedient servant,

ANDW. A. HARWOOD,
Commodore, Commanding Potomac Flotilla.

Hon. GIDEON WELLES,
Secretary of the Navy.

Report of Acting Master McGowan, U. S. Navy, commanding U. S. S. Wyandank, regarding captures.

U. S. S. WYANDANK,
Potomac Flotilla, December 1, 1862.

SIR: The following-named men were captured last evening while crossing from Virginia to Maryland. The man Harmon was captured once before by me at the same place, viz, White Neck Creek, and I have every reason to believe is pretty largely engaged in the contraband trade. He is a mulatto, and the provost-marshal released him on that account before.

Name.	Complexion.	Where from.	Where captured.
Elijah Silva	White	Westmoreland County, Va	White Neck Creek.
Thomas Butler	do	do	Do.
William Harmon	Mulatto	do	Do.

I am, very respectfully, your obedient servant,

JOHN MCGOWAN, Jr.,
Acting Master, Commanding.

Commodore A. A. HARWOOD,
Commanding Potomac Flotilla and Navy Yard, Washington, D. C.

---

*See pp. 158-160.

Instructions from Commodore Harwood, U. S. Navy, commanding Potomac Flotilla, to Lieutenant-Commander Magaw, U. S. Navy, commanding First Division.

NAVY YARD, WASHINGTON, *December 2, 1862.*

SIR: I send by the *Teaser* an unofficial letter* from Lieutenant-Commander McCrea, and in relation to those points which it touches on which are important to the public service, I wish you to act promptly and decidedly.

If you can spare the *Yankee*, according to Lieutenant-Commander McCrea's suggestion, send her by all means.

I wish to be sure that the coal is sent with all possible speed and security, and it is perhaps better not to trust to a single vessel.

The ammunition on board the *Ella* will be wanted probably. I send by the *Teaser* powder in cartridges, which it seems was left out in the requisition for the projectiles.

You will have to get these ordnance articles together and send them round; the *Ella* or *Yankee* may take them all.

Return me the enclosed letter when you have acted on it.

Keep in mind that the contraband trade must be checked by the present position of affairs; that all the force we can spare should be in the Rappahannock to cover any operations and to prevent the erection of batteries which might seriously annoy us.

Take care that every precaution be observed that the coal and ammunition reach the Rappahannock speedily and safely.

Very respectfully, your obedient servant,

ANDW. A. HARWOOD,
Commodore, Commanding Potomac Flotilla.

Lieutenant-Commander S. MAGAW,
Commanding First Division Potomac Flotilla.

Order of Commodore Harwood, U. S. Navy, commanding Potomac Flotilla, to Lieutenant-Commander Magaw, U. S. Navy, commanding First Division.

NAVY YARD, WASHINGTON, *December 2, 1862.*

SIR: I have just received a telegram† from Lieutenant-Commander McCrea, a copy of which I enclose.

You can use your discretion as to going round and assuming the command as he suggests.

I have already written that I want a sure convoy for the coal vessel; that it will not do to depend entirely on the *Teaser*.

If you can leave Aquia without risk and go round, I think it will forward the service. Answer by telegram what you conclude to do.

Very respectfully, your obedient servant,

ANDW. A. HARWOOD,
Commodore, Commanding Potomac Flotilla.

Lieutenant-Commander SAML. MAGAW,
Commanding First Division Potomac Flotilla.

---

* See p. 172. † Not found.

Order of Lieutenant-Commander McCrea, U. S. Navy, commanding Second Division Potomac Flotilla, to Acting Master Shankland, U. S. Navy, to assume command during his absence.

U. S. S. JACOB BELL,
Rappahannock River, off Port Conway, December 2, 1862.

SIR: You will assume command of this flotilla during my absence and until my return, without relieved by a senior officer.

You will carefully carry out the present rules and regulations of the squadron, and any you may make beneficial to the service. You will guard against any sudden attack of the enemy, either by land or water, and see that the vessels are all ready against a surprise. Make any movement that will be of importance to the Government, but no useless expenditure of ammunition or life will be of avail without an important result. I shall endeavor to send supplies as soon as possible from Washington. You will communicate with Major-General [J. G.] Parke, chief of staff, Army of the Potomac, on all matters that partake of a cooperation on any movements of the enemy that you think proper, and you can also telegraph to Washington navy yard to Commodore Harwood anything you deem necessary. Be careful to use your judgment in cases of responsibility. "Be sure you are right, then go ahead."

Should I be detained longer than I anticipate, I will inform you, and also when you may expect my return. Do not scatter the vessels or leave one alone. I think it better two should be together, or near enough to assist each other.

The commanding officer on shore will afford you all facilities to communicate with headquarters.

Respectfully, etc.,

E. P. MCCREA,
Commanding Flotilla.

Acting Master SHANKLAND,
Commanding U. S. S. Currituck.

Order of Lieutenant-Commander McCrea, U. S. Navy, commanding Second Division Potomac Flotilla, to Acting Master Street, U. S. Navy, to assume temporary command of U. S. S. Jacob Bell.

U. S. S. JACOB BELL, *December 2, 1862.*

SIR: You will assume command of this vessel during my absence. Acting Master Shankland will be the senior officer commanding, until relieved by a senior officer, and you will confer with him accordingly. Observe to carry out the rules and regulations of the vessel and the service. Keep a sharp lookout on the enemy, and be ready at any time for him.

Respectfully, etc.,

E. P. MCCREA,
Commanding Flotilla.

Acting Master WILLIAM T. STREET.

Instructions from Lieutenant-Commander McCrea, U. S. Navy, commanding Second Division Potomac Flotilla, to the senior officer present, Rappahannock River.

HEADQUARTERS, *December 3, 1862.*

SIR: Should any gunboats arrive during my absence, you will detain them until further orders. All vessels will fill up with coal, and a vessel

will be detailed to tow the coal vessel to the mouth of the river, when she will return and report to you.

All vessels will be held in readiness for service at a moment's warning.

Very respectfully, your obedient servant,

E. P. McCREA,
Commanding Flotilla.

SENIOR OFFICER PRESENT, RAPPAHANNOCK FLOTILLA.

Order of Lieutenant-Commander McCrea, U. S. Navy, to Acting Master Shankland, U. S. Navy, in temporary command of Second Division Potomac Flotilla.

HEADQUARTERS OF THE ARMY, *December 4, 1862.*

DEAR SIR: I expect the *Satellite*, *Teaser*, *Wyandank*, and *Yankee* around. Keep them until I return or Captain Magaw comes up. Send a vessel down to the mouth of the Rappahannock with the coal vessel, and let her return to you. Keep a bright lookout for the enemy. I shall return as soon as I can.

Yours, etc.,

E. P. McCREA,
Commanding.

Acting Master SHANKLAND, or SENIOR OFFICER PRESENT.

Engagement at Port Royal, Va., December 4, 1862.

Report of Lieutenant-Commander Magaw, U. S. Navy, commanding Second Division Potomac Flotilla, transmitting reports of commanding officers of vessels which participated.

U. S. S. ANACOSTIA,
Three Miles below Port Conway, Rappahannock River,
December 6, 1862.

SIR: I respectfully enclose the reports of the commanding officers of the different vessels that engaged the enemy's field batteries day before yesterday. I had not arrived, but approve their course in falling back to this point to husband their ammunition. The *Wyandank* is aground about 6 miles below this point. The *Jacob Bell* and *Teaser* are with her. I may be obliged to use the coal schooner, now discharging, to lighten her. I hope not, however. We are well, and anxiously awaiting news from General Burnside as to his plan of operation or point of crossing. The enemy have rifle pits above Port Royal and artillery at several points above. There are five regiments, each of which have a fieldpiece. If the Army crosses far above this point, we will meet with loss in covering their crossing, but we are prepared.

The *Satellite*, I learn, has gone out of the river, towing the *Dragon*, her shaft being broken. Acting [Volunteer] Lieutenant Hays would have shown more judgment had he sent the *Teaser* with her. I am every moment expecting the *Yankee*.

Very respectfully, your obedient servant,

SAMUEL MAGAW,
Lieutenant-Commander, etc.

Commodore A. A. HARWOOD,
Commanding Potomac Flotilla, etc.

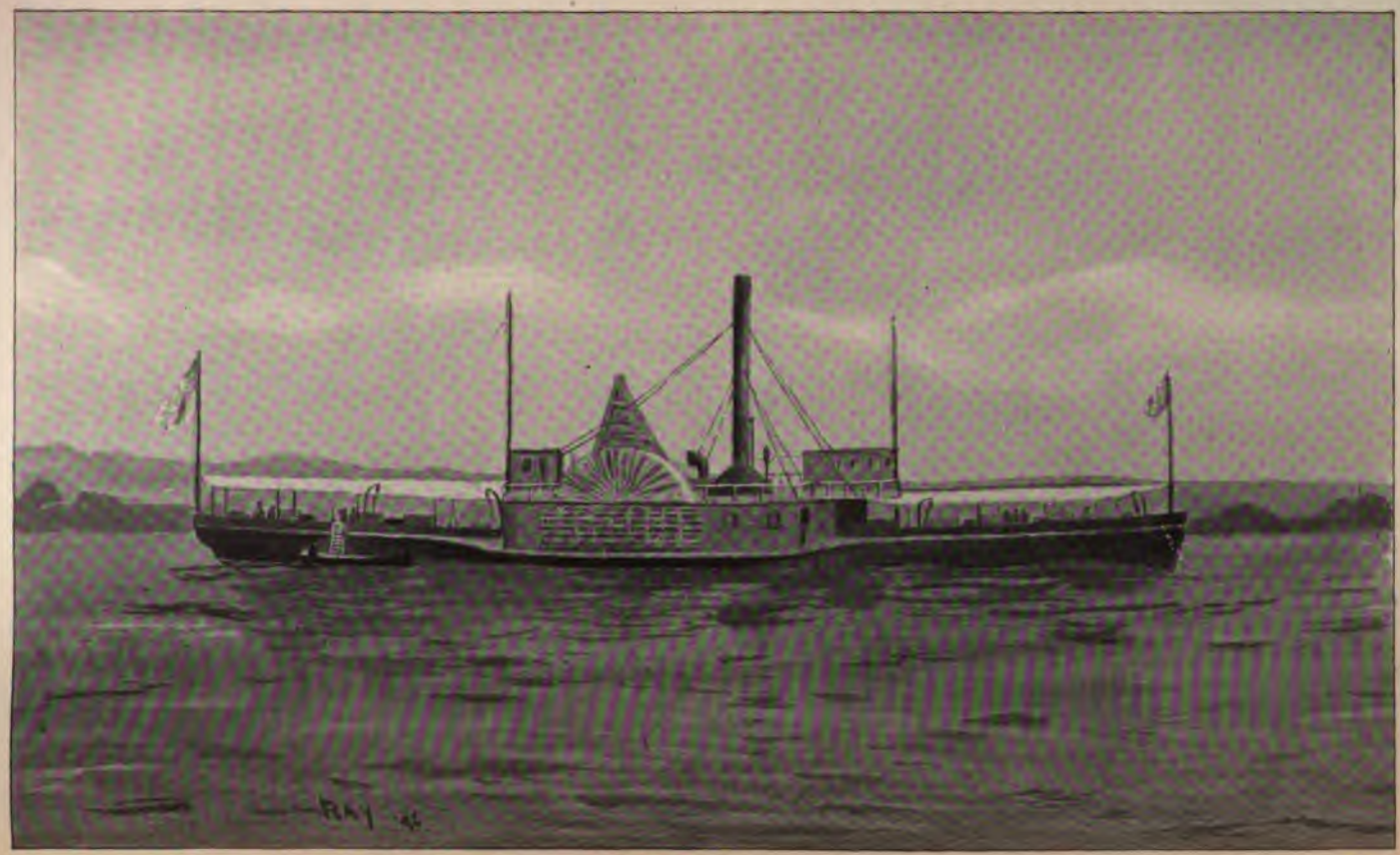

United States Steamer Jacob Bell.

[Enclosure.]

U. S. S. CURRITUCK,
Off Pratt's Point, December 5, 1862.

SIR: I beg leave to report [that] at 4:15 p. m., December 4, the rebels opened fire upon this squadron at our anchorage at Port Conway from a battery about 2 miles down the river at a place called Pratt's Landing, and about half a mile from the river bank. They fired solid shot, which passed very close and fell about 500 yards beyond this vessel, we lying the farthest up.

I signalized the squadron to get underway and open fire upon the battery and town, which was promptly done by all (the boats were fought underway). About 5:10 p. m. the enemy ceased firing from their battery, but still annoyed us with small arms. Night coming on, and the shore from Pratt's Point to Mill Bank Point being hard ground and the channel narrow, I did not think it prudent to remain at that anchorage, as we should be exposed to the fire of their riflemen during the night, and according to my instructions, I did not think the result of remaining would be of advantage to the Government, but might interfere with the plans at headquarters. Therefore, at 5:20 p. m., I signalized to the squadron to follow my movements, and started for this, our present anchorage, in the following order: *Currituck*, *Cœur de Lion*, *Anacostia*, and *Jacob Bell*. In passing Pratt's house we received the fire of artillery from the bank, which was promptly returned by the steamers as they passed, and, I think, with good effect, but it being dark I could not judge with certainty. As soon as we anchored, which was at 5:45 p. m., I communicated with Major [Peter] Keenan, Eighth Pennsylvania Cavalry, who informed me that he had learned from deserters that there were five regiments of infantry, cavalry, and artillery encamped about 2 miles back from the river. Our present anchorage is 3 miles below the former one, and protected by a long piece of marsh, where I shall remain until we can get our supplies (coal especially). I beg to state that no person was hurt in the squadron, the *Jacob Bell* [being] the only vessel that was hit, which is mentioned in her captain's report, which is hereby enclosed, along with the report of the captains of the *Anacostia* and *Cœur de Lion*.

I beg leave to state that it was the unanimous opinion of all the captains that we had better remain until our supplies arrived.

I respectfully state that the officers and men behaved well while under fire.

The following is the amount of ammunition expended on board of this vessel:

Eighteen 6-inch shell for 32-pounder.	2 stand of grape.
Fifteen common fuse rifle shell.	1 stand of canister.

Very respectfully, your obedient servant,

WM. F. SHANKLAND,
Acting Master, Commanding, and Senior Officer Present.

[Lieutenant-Commander SAMUEL MAGAW, U. S. Navy.]

[Subenclosures.]

U. S. S. JACOB BELL,
Off Port Royal, Rappahannock River, December 4, 1862.

SIR: I have the honor to report that at 4:15 p. m., while the flotilla was lying at anchor off this place, [we] were opened upon from a battery of the enemy situated on a hill about 2½ miles down the river.

I immediately got underway and called to quarters and stood down the river and engaged the battery with 50-pounder rifle and 8-inch shell gun, the enemy's shot all passing over us. After firing about thirty minutes a second battery opened upon us from an elevation back of the town. Receiving at this time a signal from you to return to our former position, which I immediately did, and seeing that the steamer *Anacostia* was fired upon from the town, I directed my fire upon the same until darkness came on and was ordered to cease, and withdrew to a point of safety for the night. The enemy had ceased firing some time before. On our way down were again opened upon at Pratt's Bluff by a field battery. I immediately responded with 8-inch gun, 32-pounder, and 12-pounder. At this point I received a 12-pound rifle shot, which passed through the port sill of 32-pounder forward, but without doing any serious damage. I am happy to add no casualty occurred on board this vessel.

I am, sir, very respectfully,

WM. T. STREET,
Acting Master, Commanding.

Acting Master WILLIAM F. SHANKLAND,
Commanding Currituck and Rappahannock Flotilla.

—

U. S. S. ANACOSTIA,
Off Port Royal, Rappahannock River, December 4, 1862.

SIR: About 4 o'clock p. m. the enemy opened fire in two directions. I immediately got underway and responded to it instantly with 9-inch shell guns, 50-pound rifle, and 12-pound rifle howitzer. The firing continued until dark, which was about an hour and fifteen minutes. My vessel was not hit or any one on board injured, the shots from the lower battery passing over me, with the exception of one, that struck alongside. On receiving orders to proceed to a safe anchorage for the night, and as I was winding my vessel round to obey them, I was opened upon by infantry from the town, to which I responded with 9-inch guns, assisted by the *Jacob Bell*. About a mile below the town I was opened upon at a place called Pratt's Bluff by a section of artillery. The shot passed over and about us, but we passed by uninjured.

I am, very respectfully, your obedient servant,

NELSON PROVOST,
Acting Master, Commanding.

W. F. SHANKLAND,
Acting Master, Commanding, and Senior Officer.

—

U. S. S. CŒUR DE LION, *December 4, 1862.*

SIR: I have the honor to report to you that at 4:15 p. m. of this day, December 4, while lying at anchor off Port Royal, the enemy opened fire upon us from a battery situated on a hill about 2 miles below us on the south side of the river. All hands were immediately called to quarters, the boat hoisted, and we weighed anchor. We then commenced firing from our 12-pound rifle at the battery, and opened with canister upon some of the enemy in sight on the shore.

We continued firing toward the battery, but as it was concealed and our only mark was the smoke from their guns, after a few rounds I gave the order to cease firing.

Soon after this, upon being hailed by the senior officer on board the U. S. S. *Currituck*, I proceeded on board that vessel, and, in company

with the commanding officers of the other vessels of the fleet, attended a council of war. It was thought best to change our anchorage, as the enemy had also commenced firing upon us from a battery back of Port Royal. I then returned to my vessel, and, following the *Currituck*, we proceeded down the river.

When nearly opposite Pratt's Bluff the enemy opened fire upon the *Currituck*, and as we came in range they also fired at us from field-pieces and rifles, which we replied to vigorously till we were out of range. Their shots being directed too high, passed over us, doing no damage. Having reached a place about 3 miles from our former anchorage, in obedience to signals, we came to for the night. At this time we have but 1½ tons of coal on board.

The expenditure of ammunition was as follows:

	Charges.
30-pound rifle	6
12-pound rifle	17
12-pound smoothbore	5
Total	28

I am happy to report that the officers and men behaved well while under the enemy's fire.

Respectfully, your most obedient servant,

CHAS. H. BROWN,
Acting Master, Commanding U. S. S. Cœur de Lion.

Acting Master WILLIAM F. SHANKLAND,
Senior Officer Rappahannock Flotilla.

Supplemental report of Acting Master Provost, U. S. Navy, commanding U. S. S. Anacostia.

U. S. S. ANACOSTIA,
Three Miles below Port Royal, Rappahannock River,
December 10, 1862.

SIR: Since making my last report of the engagement of the 4th instant, I beg to inform you that I have learned from Captain Barry, Eighth New York State Volunteers (cavalry), that the distant battery was dismounted by our guns, he having received this information from good authority.

I am, very respectfully, your most obedient servant,

NELSON PROVOST,
Acting Master, Commanding.

Lieutenant-Commander SAMUEL MAGAW,
Commanding Flotilla.

Supplemental report of Acting Master Street, commanding U. S. S. Jacob Bell.

U. S. S. JACOB BELL,
Rappahannock Flotilla, December 11, 1862.

SIR: I learned yesterday that in the engagement of the 4th instant at Port Royal the large gun on the hill in the rear of Pratt's Bluff was dismounted at the second discharge from our guns.

As this vessel was the nearest to the battery, I got underway, ran down, and opened upon it with 50-pounder rifle and 8-inch shell gun,

while the steamers *Currituck*, *Anacostia*, and *Cœur de Lion* directed their first fire into the town. I therefore believe that said gun was dismounted by a projectile thrown from one of the guns of this vessel.

I am, sir, very respectfully, your obedient servant,

W. T. STREET,
Acting Master, Commanding.

Lieutenant-Commander SAMUEL MAGAW,
Commanding Rappahannock Flotilla.

Report of Colonel Gregg, U. S. Army.

HEADQUARTERS EIGHTH PENNSYLVANIA CAVALRY,
Camp near King George Court-House, Va., Dec. 4 [1862]—10 p. m.

CAPTAIN: I have just returned from Port Conway [Va.], to which place I had gone because of heavy cannonading there. This afternoon the rebels opened a battery on the gunboats at Port Conway. The gunboats replied by an active firing for some two hours. Just before my arrival the boats left Port Conway and descended the river without communicating with my command there. Where they have gone, or whether or not they will return, I do not know. At the time of the firing, the enemy were discovered working on rifle pits above Port Conway. The abrupt departure of the boats made it necessary for me to change my dispositions at Port Conway; accordingly I sent the section to this camp, and left near the ferry 100 men. I regret that the boats should have left without taking or destroying two large flatboats at Port Royal. These boats, directly opposite Port Conway, would cross over 150 men, and I had made frequent requests to have them taken. I have sent down the river to overtake, if possible, the boats and ascertain their destination, and to express my readiness to send back the section if they intend to return. The enemy may attempt to cross some force above or below; but, from a careful inspection of my pickets to-night, I do not doubt but they will fail to accomplish anything. My pickets in all directions, and about the several camps, are posted under my personal supervision, and, if they do their duty, can not be surprised. Yesterday I had five boats destroyed below Port Conway. To-day I discovered one large flatboat above, and on this side, and had it destroyed.

I am, very respectfully, your obedient servant,

D. MCM. GREGG,
Colonel Eighth Pennsylvania Cavalry.

Captain A. J. COHEN,
Assistant Adjutant-General, Cavalry.

Report of Major-General Daniel H. Hill, C. S. Army.

DIVISION HEADQUARTERS, *December 5, 1862.*

[SIR:] I have the honor to report that the Yankee gunboats (four in number) have been run away from Port Royal, Va. Three of these were the notorious pirates *Pawnee*, *Anacostia*, and *Live Yankee*. The fourth was unknown. They carried 21 guns and had a complement of some 500 men. Captain [R. A.] Hardaway opened upon them with his Whitworth gun at a distance of 3 miles. They replied promptly, but finding their

range short attempted to approach him, but were promptly driven back under cover of the town by Captain [T. H.] Carter from the hills opposite it. Riflemen were placed to greet them above Port Royal, so that they were afraid to go in that direction. And now was witnessed an instructive sight. These piratical cruisers which have bombarded so many unoffending private residences and have carried desolation to so many peaceful homes shrank from the wager of battle and kept close under the shelter of town, so that the flank batteries could not fire upon them without endangering it. Hardaway still kept up his pelting in front until dark, when they fled down the river. And now two 3-inch rifles, under the gallant [John] Pelham, of Stuart's cavalry, placed near the water's edge, gave them a parting salute. I regret to add that he had one man severely and one slightly wounded. There were no casualties in the batteries of my command.

This same gun of Hardaway, at Upperville [Va.], drove entirely off the field near Upperville a Yankee battery of artillery and a large force of cavalry and infantry at a distance of 3½ miles. "The restorers of the Union" have made their trust so much in their long-range guns that when they find themselves under the fire of a superior range they become demoralized and will not fight.

I make this report to call the attention of the War Department to the extraordinary merit of the Whitworth gun in the hands of such a man as Hardaway—the best practical artillerist I have seen in service. He still remains a captain while officers never engaged have been promoted over him.

With great respect,

D. H. HILL,
Major-General.

Lieutenant-General [THOMAS J.] JACKSON,
Commanding Left Wing.

Report of Brigadier-General W. H. F. Lee, C. S. Army.

HEADQUARTERS LEE'S CAVALRY BRIGADE,
Morse [Moss] Neck, Va., December 5, 1862.

GENERAL: I have the honor to forward Colonel Beale's report of an expedition sent into Westmoreland [County], which, as you know, was entirely successful.

On yesterday evening I heard that General Hill had ordered the Whitworth gun to a position near Pratt's house to open on the gunboats. I ordered Major Pelham to carry the two rifled guns of [M. N.] Moorman's battery, under Lieutenant [Charles R.] Phelps, to the position near Pratt's house previously examined by him with yourself. After replying to the Whitworth gun for an hour, they steamed up and came down the river. Major Pelham waited until they were within 300 yards, and opened with deadly effect, putting two shots through and through one of the boats. They replied with grape, and one of the gunners had his leg carried off. I will forward the name of the man. He behaved with marked gallantry and coolness. Major Pelham superintended the guns in person.

Very respectfully,

W. H. F. LEE,
Brigadier-General.

Major-General J. E. B. STUART,
Commanding Cavalry Division.

[Endorsements.]

HEADQUARTERS CAVALRY DIVISION, *December 5, 1862.*

Respectfully forwarded for the information of the commanding general, whose notice is respectfully called to the gallantry displayed by Major Pelham and the officers and men under his command. The brigade of Brigadier-General W. H. F. Lee is doing gallant service on the lower Rappahannock, and no opportunity to strike the enemy will be allowed to pass.

J. E. B. STUART,
Major-General.

HEADQUARTERS ARMY OF NORTHERN VIRGINIA,
December 5, 1862.

Respectfully forwarded to the Adjutant and Inspector General for the information of the Department. Four gunboats of the enemy had been lying for several days opposite Port Royal, and I desired to drive them out of the river without drawing their fire upon the town. A distant point, therefore, had to be selected to dislodge them, on which account I fear the boats did not suffer as much as I intended they should.

R. E. LEE,
General.

Extract from report of Major-General Hill, C. S. Army.

HEADQUARTERS DIVISION, *December 24, 1862.*

CAPTAIN: I have the honor to report the operations of my command around Fredericksburg.

On December 3, my division was sent to Port Royal to prevent the crossing of the Yankees at or near that point. Four Yankee gunboats were then lying opposite the town. Rifle pits were constructed above the town on the night of the 4th [3d], to prevent the pirates from ascending, and Hardaway's Whitworth gun was placed on Jack's Hill, some 3 miles below the town, and his remaining two guns, with Carter's Parrotts, were placed on the hill due west of the town.

Hardaway opened upon the gunboats about 3 o'clock on the 5th [4th] instant. Finding the fire too hot for them, they fled back to town, where they were sheltered from Carter's fire. Hardaway continued to pelt them, and to stop his fire (as is supposed) the ruffians commenced shelling the town, full of women and children. The town was partially destroyed, but a merciful God kindly protected the inoffensive inhabitants. A dog was killed and a negro wounded; no other living being was injured. Finding that Hardaway's fire did not slacken, the pirates fled down the river; but now a worse fate awaited them than a distant cannonade. The gallant Major Pelham, of General Stuart's Horse Artillery, had a section of artillery immediately on the bank of the river, and gave them a parting salute. He was greeted with grape and canister and had 1 man killed. There were no casualties at my batteries. From Yankee sources, we learned that the pirates lost 6 killed and 20 wounded. Whether they overestimated or underestimated their loss, I do not know. They sometimes lie on one side and sometimes on another.

In a few days the pirates returned as high as Port Tobacco [Va.], with five more of their thievish consorts. Eleven rifle guns of Colonel [J. Thompson] Brown's reserve artillery and all my division batteries

were brought down to the river under cover of a dense fog, and when it lifted, were opened upon them. The firing was bad, except from the Whitworth, and it soon drove them under cover of a thick growth of woods, where they lay concealed. We have learned from the same respectable Yankee source that three of the pirates were struck (one three times), and that a captain was killed and four or five other thieves knocked on the head. We had no casualties.

* * * * * * *

D. H. HILL,
Major-General.

Captain A. S. PENDLETON,
Assistant Adjutant-General.

Order of Acting Master Shankland, U. S. Navy, senior officer present, to Acting Master Street, U. S. Navy, commanding U. S. S. Jacob Bell, to reconnoiter Pratt's Point, Va.

U. S. S. CURRITUCK, *December 5, 1862.*

SIR: You will proceed with the U. S. S. *Jacob Bell* abreast of Pratt's Point [Va.], for the purpose of reconnoitering. If you are fired into return it at once. Do not proceed up any higher.

Very respectfully, your obedient servant,

W. F. SHANKLAND,
Acting Master and Senior Officer.

Acting Master WM. T. STREET.

Report of Lieutenant-Commander Magaw, U. S. Navy, commanding Second Division Potomac Flotilla, regarding efforts made to float the U. S. S. Wyandank.

[U. S. S.] ANACOSTIA,
Oaken Brow, Rappahannock River, December 7, 1862.

SIR: The *Wyandank* is still ashore below. The *Yankee, J. Bell, Satellite,* and *Teaser,* with a schooner, are at work discharging her. I am in hopes she will come off with to-morrow morning's tide. The ice formed this morning almost across the river. Two nights more like last may close it up.

I learn General Franklin's grand division is in this vicinity. I saw one corps moving down this way day before yesterday. The *Currituck* and *Cœur de Lion* are here with me. I will write you daily.

I have the honor to be, your obedient servant,

SAMUEL MAGAW,
Lieutenant-Commander, etc.

Commodore A. A. HARWOOD,
Commanding Potomac Flotilla.

Order of Commodore Harwood, U. S. Navy, commanding Potomac Flotilla, to Acting Ensign Wright, U. S. Navy, commanding U. S. S. Dragon, regarding reported attack upon that vessel.

NAVY YARD, WASHINGTON, *December 8, 1862.*

SIR: I wish to be informed whether in your passage from the Rappahannock to the Potomac the *Dragon* was aground and attacked by the

enemy, and if so how is it that the first intelligence of such events comes to your commander in chief through the newspapers?

Respectfully, your obedient servant,

ANDW. A. HARWOOD,
Commodore, Commanding Potomac Flotilla.

Acting Ensign ROBERT C. WRIGHT,
Commanding U. S. S. Dragon, Potomac Flotilla.

Report of Acting Ensign Wright, U. S. Navy, Commanding U. S. S. Dragon, denying newspaper report regarding attack upon that vessel.

U. S. S. DRAGON,
Navy Yard, Washington, December 8, 1862.

SIR: I have to report to you that the statement made in the Evening Star is without foundation and untrue in every particular. The *Dragon* was not attacked and did not throw a shell into a boat, as is stated in the paper of the 6th.

I am, sir, very respectfully, your obedient servant,

ROBERT C. WRIGHT,
Acting Ensign.

Commodore A. A. HARWOOD,
Commanding Potomac Flotilla and Washington Navy Yard.

Report of Lieutenant-Commander Magaw, U. S. Navy, Commanding Second Division Potomac Flotilla, regarding affairs on Rappahannock River.

U. S. S. YANKEE,
Oaken Brow, Rappahannock River, December 8, 1862—p. m.

SIR: I have the honor to report that nothing worthy of note has occurred during the last twenty-four hours.

The enemy appear to be in less force, opposite, in this vicinity.

The *Wyandank* is still ashore, but by this time is discharged. I hope she will come off with this tide.

We are well and waiting news from General Burnside.

I sent the *Currituck* to the mouth to-day to observe and pilot up the *Freeborn*.

Very respectfully, your obedient servant,

SAMUEL MAGAW,
Lieutenant-Commander.

Commodore A. A. HARWOOD,
Commanding Potomac Flotilla, etc.

Engagements at Brandywine Hill, Rappahannock River, Va., December 10 and 11, 1862.

Report of Commodore Harwood, U. S. Navy, commanding Potomac Flotilla, of various engagements with Confederate batteries on the Rappahannock River.

POTOMAC FLOTILLA, COMMANDANT'S OFFICE, NAVY YARD,
Washington, December 15, 1862.

SIR: I beg leave briefly to report the proceedings of that part of the flotilla now serving in the Rappahannock.

On the 4th instant the *Currituck*, *Anacostia*, *Jacob Bell*, [and] *Cœur de Lion* were attacked at anchor by a battery at Pratt's Landing.

The gunboats present got underway by order of the senior officer present. Acting Master Shankland engaged the batteries and silenced them. The *Jacob Bell* only was struck. No one was hurt in any of the vessels.

To avoid a useless expenditure of ammunition and exposure to the riflemen who still continued their fire, the vessels were dropped down to an anchorage 3 miles farther down the river. In passing a place called Pratt's house they exchanged shots with the enemy again, but as it was dark the effect could not be ascertained.

On the 10th instant the *Currituck*, on her return from the mouth of the Rappahannock, was opened on from Brandywine Hill and about thirty shots fired at her without effect. We returned the fire and proceeded to the anchorage of the flotilla 3 miles below Port Conway. Here the rebels opened fire on the gunboats from a battery about a mile north of the first. The *Currituck* in this second engagement was struck twice, the last time by a Parrott shell, which passed through her side and exploded in her fire room, wounding three men: Henry Smith, fireman, mortally (since dead), Jeremiah Daley (coal heaver) severely; John McCluskey (captain forecastle) slightly. This shot broke blower, blower engine, and steam gauge pipe. The vessel is now at the yard for repair.

I have the honor to be, with great respect, your obedient servant,

ANDREW A. HARWOOD,
Commodore, Commanding Potomac Flotilla.

Hon. GIDEON WELLES,
Secretary of the Navy.

P. S.—Mr. S. A. Simmons, master of the coal schooner *Kadosh*, was mortally wounded on the 10th and died on the 11th.

Report of Lieutenant-Commander Magaw, U. S. Navy, commanding Second Division Potomac Flotilla, transmitting reports of commanding officers of vessels which participated in engagement.

U. S. S. YANKEE,
Oaken Brow Farm, December 10, 1862.

SIR: I have the honor to enclose herewith the reports of the different officers in reference to the engagement of this afternoon.

The object of the enemy was evidently to drive us down the river, in which, however, they were not successful, and we still occupy the same position.

My chief regret is the wound of Captain Simmons, master of the private coal schooner *Kadosh*, which was seized and brought here through necessity. His wound will, in all probability, speedily prove fatal.

The officers and men of all the vessels engaged performed their duties to my entire satisfaction.

Very respectfully, your obedient servant,

SAMUEL MAGAW,
Lieutenant-Commander, etc.

Commodore A. A. HARWOOD,
Comdg. Potomac Flotilla and Navy Yard, Washington, D. C.

[Enclosures.]

U. S. S. CURRITUCK,
Three Miles below Port Conway, Rappahannock River, Va.,
December 10, 1862.

SIR: I have the honor to make the following statement:

At 2:25 p. m., on our return from the mouth of the Rappahannock River, when abreast of Brandywine Hill, the enemy opened fire on us from the hill, firing some thirty shell at us before we arrived at this anchorage, none of them taking effect. We beat to quarters and returned the fire with our rifle gun. At 2:40 p. m. came to anchor. The enemy opened fire on the fleet from another battery about a mile north of the first. At 3:20 p. m. received orders to open fire with much elevation. At 4 p. m. a 30-pounder Parrott percussion shell struck our ship on the starboard side 20 inches under water, and as soon as possible we put a shot plug in the hole without ceasing firing. At 4:30 p. m. received orders to cease firing. At 4:35 p. m. a 30-pounder Parrott percussion shell struck our ship on the starboard side aft the main rigging, going through into the fire room and exploded, wounding three men, viz:

Jeremiah Daley (coal heaver), compound fracture of radius of right forearm and compound fracture of cranium and contused wound of right foot, with partial loss of first, second, and third toes.

Henry F. Smith (coal heaver), compound fracture of left femur at juncture of middle and upper third, and incised wound of face, laying bare left side of lower jawbone.

John McCluskey (first-class fireman), slight contusion of back in lower region.

Also broke blower, blower engine, and steam gauge pipe. I also state during the engagement my officers and men behaved nobly. At 7 p. m. ship still leaking badly.

Very respectfully, your obedient servant,

T. J. LINNEKIN,
Acting Master, Commanding U. S. S. Currituck.

Lieutenant-Commander SAMUEL MAGAW,
Commanding [Second Division] Potomac Flotilla, etc.

[Subenclosure.]

U. S. S. CURRITUCK, *December 11, 1862.*

SIR: I beg leave to report the following casualties occurring in my department during the engagement with the enemy's battery at Brandywine Hill yesterday, December 10, 1862:

First. Henry F. Smith, coal heaver; compound fracture of left femur, little below the junction of middle and upper thirds; lacerated wound of left side of face, extending from angle of lower jaw to middle of upper lip. Died at 2 o'clock p. m. to-day.

Second. Jeremiah Daley, coal heaver; compound fracture of radius of right forearm; incised wound of right hand, extending into first joint of first finger; compound fracture of the external table of frontal bone of the skull; lacerated wound of right foot, with partial loss of first, second, and third toes.

Third. John McCluskey, first-class fireman; and

Fourth, William Finnegan, first-class fireman, received slight contusions not requiring attention, nor unfitting him for duty.

Very respectfully, your obedient servant,

HENRY JOHNSON,
Acting Assistant Surgeon, U. S. Navy.

THOMAS J. LINNEKIN, Esq.,
Acting Master, Commanding U. S. S. Currituck.

U. S. S. YANKEE,
Three Miles below Port Royal, Rappahannock River,
December 10, 1862.

SIR: I have the honor to report that at 3 o'clock this afternoon the enemy opened fire on us from a battery on the south side of the river. In obedience to your order I immediately responded with my 8-inch gun, 32-pounder, and 12-pounder rifle howitzer. I have reason to believe that our fire was effective. After expending eighteen 8-inch shell, twenty-one 32-pounder shell, and fourteen Schenkle shell, I ceased firing, in accordance with your order. I am happy to say that no one was injured on this vessel. I must say that the officers and men behaved admirably.

I am, sir, very respectfully, your obedient servant,
JAMES W. TURNER,
Ensign and Executive Officer, Commanding.

Lieutenant-Commander SAMUEL MAGAW,
Commanding Flotilla.

[Endorsement.]

Acting Master Ives, commanding, was absent on duty at headquarters. I was on board the *Yankee.*

S. MAGAW,
Lieutenant-Commander.

—

U. S. S. ANACOSTIA,
Three Miles below Port Royal, Rappahannock River,
December 10, 1862.

SIR: I have the honor to report that about 3 o'clock p. m. the enemy opened fire upon us from a battery on the south side of the river. In conformity with your order I responded with 9-inch shell guns and 50-pound rifle, with apparently good effect. After expending twenty-four 9-inch shell, I, according to your orders, ceased firing. I am happy to say that no one was injured on board this vessel.

I am, sir, very respectfully, your most obedient servant,
NELSON PROVOST,
Acting Master, Commanding.

Lieutenant-Commander SAMUEL MAGAW,
Commanding Flotilla.

I would also say that both officers and men worked nobly.

—

U. S. S. JACOB BELL,
Rappahannock River, Va., December 10, 1862.

SIR: To-day, at 2:45 p. m., as I was passing from this vessel to communicate to you, a battery opened upon the coal schooners lying near the *Bell.* I immediately returned, and before I reached the vessel one of the schooners (*Sarah Minge*) received a shot in her stern, mortally wounding Captain Simmons, of the schooner *Kadosh.*

I immediately got underway and opened with a 50-pounder rifle and 8-inch shell gun.

The firing continued until 4:30 p. m. Many of the enemy's shots fell around and near us, but as they got our range would alter our position.

No casualty occurred on board this vessel.

I have the honor to be, very respectfully, your obedient servant,

WM. T. STREET,
Acting Master, Commanding.

Lieutenant-Commander SAMUEL MAGAW,
Commanding Rappahannock Flotilla.

U. S. S. TEASER,
Three Miles below Port Royal, Rappahannock River,
December 10, 1862.

SIR: I have the honor to report that about 3 p. m. the enemy opened upon us from a battery on the south side of the river. I, in accordance with your orders, responded with a 12 and 50 pounder Dahlgren rifle, and apparently with good effect. After expending twenty-nine Schenkle shell, I, according to your orders, ceased firing. I am happy to say no one was hurt on board of this vessel.

I am, very respectfully, your obedient servant,

PHILIP SHERIDAN,
Ensign, Commanding.

Lieutenant-Commander SAMUEL MAGAW,
Commanding Flotilla.

Report of Commodore Harwood, U. S. Navy, commanding Potomac Flotilla, forwarding report of casualties on board U. S. S. Currituck.

COMMANDANT'S OFFICE, NAVY YARD,
Washington, December 29, 1862.

SIR: Herewith you will find enclosed the certificate of the acting assistant surgeon of the *Currituck* relating to the wounded on board that vessel in her engagement with the enemy on the 10th instant.

The case of Mr. Simmons was a peculiarly hard one. He was engaged in transporting coal on private account, and his vessel was towed round to the Rappahannock to supply an immediate need of the flotilla. While there he received a mortal wound, of which he died in a few hours.

He leaves an indigent family, for which the flotilla has raised a liberal subscription.

I think the case of this family worthy the consideration of Congress.

I have the honor to be, with great respect, your obedient servant,

ANDW. A. HARWOOD,
Commodore, Commanding Potomac Flotilla.

Hon. GIDEON WELLES,
Secretary of the Navy.

[Enclosure.]

RAPPAHANNOCK RIVER,
Three Miles below Port Royal, December 10, 1862.

SIR: I have to report during the engagement of this day the wounding of Captain Samuel A. Simmons,* schooner *Kadosh* (fatally); also

---

*Master of a coal vessel.

Jeremiah Daley and Henry F. Smith (the latter fatally), of the U. S. S. *Currituck*.

I remain, sir, very truly, your obedient servant,

GEO. B. TODD,
Acting Assistant Surgeon, U. S. S. Yankee.

Captain T. POYNTON IVES,
Commanding U. S. S. Yankee.

Report of Lieutenant-Commander Magaw, U. S. Navy, commanding Second Division Potomac Flotilla, of attack upon Pratt's Bluff, Rappahannock River.

U. S. S. YANKEE,
Oaken Brow, Rappahannock [River], December 11, 1862—p. m.

SIR: I have the honor to report that at the request of General Burnside I made an attack this morning at daylight on the artillery of the enemy at Pratt's Bluff with the *Satellite* and *Jacob Bell*. They left without firing a shot. I think they had just gotten intelligence of the feint to be made by a portion of Franklin's grand division at Skinker's Neck. At the same time the *Anacostia* opened on the battery below that attacked us yesterday. They did not respond, and this evening there is no appearance of the enemy in our vicinity. The general wished us to make a noise and we did. Heavy firing has been heard up the river all day, and we are anxiously awaiting news. The general may wish us to come to Fredericksburg, and we are ready at five minutes' notice. I sent the *Currituck* to Washington with the bodies of Captain Simmons and one of her own men, who died to-day; also one man badly wounded. She went in company with the coal vessels and *Wyandank*. She is leaking. We are all well, and only sorry we could not have been at Fredericksburg to-day, but the general thought we were better off here. He has 353 pieces of artillery, 20 of which would cover his crossing better than we, as the narrowness of the river rendered our cooperation impracticable. The *Freeborn* arrived this morning.

Very respectfully,

SAMUEL MAGAW,
Lieutenant-Commander.

Commodore A. A. HARWOOD,
Commanding Flotilla.

Additional report of Acting Master Linnekin, U. S. Navy, commanding U. S. S. Currituck.

U. S. S. CURRITUCK,
Navy Yard, Washington, December 15, 1862.

SIR: I beg leave to state that on the 11th instant or the following morning at sunrise, Captain Magaw had the fleet divided into three divisions and opened fire on the batteries that we silenced the night before, but got no reply; ceased firing:

I also state that Henry F. Smith died at 2 o'clock p. m., the 11th instant, of his wounds received on the 10th instant; also Captain S. A. Simmons, of the coal schooner *Kadosh*, who was wounded on the 10th, died the next day of his wounds.

Very respectfully, your obedient servant,

T. J. LINNEKIN,
Acting Master, Commanding U. S. S. Currituck.

Commodore ANDREW A. HARWOOD,
Commanding Potomac Flotilla, Washington, D. C.

Commendatory letter from Lieutenant-Commander Magaw, U. S. Navy, to Acting Master Street, U. S. Navy.

U. S. S. COMMODORE READ,
Potomac Flotilla, November 14, 1863.

MY DEAR SIR: I am happy to say that your duties have been attended to during your service in the flotilla to my entire satisfaction. During the first battle of Fredericksburg, while we were at Oaken Brow, and attacked by the enemy, attempting to drive us from our position, you had the outpost picket, and the manner in which you handled the *Jacob Bell*, then under your command, elicited the admiration of the whole flotilla. If this little note can be of any service to you, it will much gratify

Your obedient servant,

SAMUEL MAGAW,
Lieutenant-Commander.

Acting Master Commanding W. TELL STREET,
U. S. S. Fuchsia.

Order of Lieutenant-Commander Magaw, U. S. Navy, commanding Second Division Potomac Flotilla, to Acting Master Linnekin, U. S. Navy, commanding U. S. S. Currituck, to proceed to the Potomac River.

U. S. S. YANKEE,
Oaken Brow, Va., December 11, 1862.

SIR: You will proceed with the *Currituck* without delay to the Potomac River and report to Lieutenant-Commander McCrea at whatever point you may find him on the river.

I hand you orders for the *Wyandank*, now at Brisco [Bristoe?] mines. You will act as convoy to her and also to the two coal schooners, until you meet with Lieutenant-Commander McCrea.

Very respectfully, your obedient servant,

SAMUEL MAGAW,
Lieutenant-Commander, etc.

[Acting Master THOMAS J. LINNEKIN,
Commanding U. S. S. Currituck.]

[Telegram.]

NAVY DEPARTMENT, *December 11, 1862.*

Just inside of the mouth of the Rappahannock River is a large quantity of supplies in barges and steamers. Let them be protected by a gunboat.

GIDEON WELLES,
Secretary of the Navy.

Commodore A. A. HARWOOD,
Commandant Navy Yard, Washington.

Report of Lieutenant-Commander Magaw, U. S. Navy, commanding Second Division Potomac Flotilla, regarding erection of earthworks by the Confederates.

Unofficial.]

U. S. S. YANKEE,
Oaken Brow, December 12, 1862.

DEAR SIR: Our pickets have just brought me word that the enemy *have thrown up* earthworks some distance above Port Royal. I

depended upon the pickets for information. Had it been given me when they first saw what was going on, I could have prevented this building a battery; it is now too late. We are troubled with fog every morning until about noon. I send two vessels down as far as Fort Lowry, to examine, etc. We have news of the shelling of Fredericksburg, and the attempt at crossing. It is not favorable.

Yours, faithfully, in haste,

SAMUEL MAGAW,
Lieutenant-Commander.

Commodore A. A. HARWOOD, etc.

[Telegram.]

NAVY YARD, WASHINGTON, *December 13, 1862.*

Lieutenant-Commander Magaw has received the order to protect the Army's supplies at the mouth of the Rappahannock, and has sent a gunboat there for that purpose.

A. A. HARWOOD,
Commodore.

Hon. SECRETARY OF THE NAVY.

Signals.

U. S. S. YANKEE, *December 13, 1862—12 : 30 p. m.*

Advance until you can see them, and use your discretion about shelling them.

Captain MAGAW.

Captain STREET.

U. S. S. YANKEE, *December 13, 1862—12 : 30 p. m.*

Assure yourself that they are not our troops.

Captain MAGAW.

Captain STREET.

U. S. S. YANKEE, *December 13, 1862—1 p. m.*

How many fieldpieces?

Captain MAGAW.

Captain STREET.

U. S. S. JACOB BELL, *December 13, 1862—1 p. m.*

One light fieldpiece and some mounted men. They have now disappeared in the direction of the hill, behind Pratt's house.

Captain STREET.

Captain MAGAW.

U. S. S. JACOB BELL, *December 13, 1862—1 p. m.*

Only one. Most of the horses went off riderless.

Captain STREET

Captain MAGAW.

U. S. S. YANKEE, *December 13, 1862—1 p. m.*

What did you see?

Captain MAGAW.

Captain STREET.

U. S. S. JACOB BELL, *December 13, 1862—1:15 p. m.*

No enemy now in sight. Shall I go back to the anchorage?

Captain STREET.

Captain MAGAW.

U. S. S. YANKEE, *December 13, 1862—1:20 p. m.*

Return to your anchorage.

Captain MAGAW.

Captain STREET.

U. S. S. JACOB BELL, *December 13, 1862—5 p. m.*

We went to Pratt's house and saw no enemy.

Captain STREET.

Captain MAGAW.

Report of Lieutenant-Commander Magaw, U. S. Navy, commanding Second Division Potomac Flotilla, regarding affairs on the Rappahannock River.

Semiofficial.] U. S. S. YANKEE,
Oaken Brow, Rappahannock [River], December 13, 1862.

DEAR SIR: We are still patiently awaiting a message from General Burnside, but I do not think he wishes us to attempt to get up until he has a foothold on the other side. Very rapid and heavy firing has been heard up the river almost all day; it must be considerably below Fredericksburg; I suppose at Skinker's Neck.

The *Satellite* went down yesterday to look out for the army barges, etc. She will keep the *Cœur de Lion*, if she thinks it necessary. If General Ingalls intends to make this river his base for supplies, I think him crazy. He has a fine railroad from Aquia to Fredericksburg, only 15 miles, and this river will require pilots, towing, and convoy. I found a squad of cavalry at Pratt's Bluff and sent the *Jacob Bell* up. She dispersed them with the third shell; they had a fieldpiece with them.

I enclose some requisitions for ammunition, etc. We are not in immediate want of ammunition; these requisitions are to fill up.

The *Teaser* is up from below and reports everything clear. She only saw a few of the enemy's pickets (cavalry).

Acting Master Street has behaved with great coolness and good judgment. I have put him in advance since the *Satellite* left. He is in temporary command of the *Jacob Bell*.

Nothing positive from the Army up to 7 p. m.

Very respectfully, your servant,

SAMUEL MAGAW,
Lieutenant-Commqnder.

Commodore A. A. HARWOOD,
Commanding Flotilla, etc.

Report of Lieutenant-Commander Magaw, U. S. Navy, commanding Second Division Potomac Flotilla, regarding affairs on the Rappahannock River.

Semiofficial.] U. S. S. YANKEE,
Oaken Brow, Rappahannock River, December 13, 1862—8 p. m.

SIR: I have the honor to report all quiet in this vicinity to-day; only a few of the enemy's cavalry pickets in sight.

We received a message this afternoon of the success of General Burnside, and at the request of the men cheered ship in all vessels in sight. I enclose a requisition of the *Anacostia*.

Very respectfully, your servant,

SAMUEL MAGAW,
Lieutenant-Commander.

Commodore A. A. HARWOOD,
Commanding Flotilla, etc.

P. S.—I expect a request from General Burnside to move up, and hope my next may be from Fredericksburg.

S. M.

Report of Commodore Harwood, U. S. Navy, commanding Potomac Flotilla, transmitting certificate of capture.

COMMANDANT'S OFFICE, NAVY YARD,
Washington, December 15, 1862.

SIR: Enclosed I forward for your information certificate of capture made by U. S. schooner *Dan Smith*, Acting Master B. C. Dean, commanding, on the 30th ultimo.

I have the honor to be, with great respect, your obedient servant,

ANDW. A. HARWOOD,
Commodore, Commanding Potomac Flotilla.

Hon. GIDEON WELLES,
Secretary of the Navy.

[Enclosure.]

Potomac Flotilla.—Certificate of capture.

Name and character of prize.—One large, flat-bottomed boat; no name. One part chest of tea. Four kegs bicarbonate of soda. One large box of matches, containing 46 dozen in round wooden boxes, 30 dozen paper boxes in packages, 3 boxes fuses. Six boxes, containing 24 dozen boxes of saponifier or concentrated lye, 1 box and 7 bags copperas.

By whom and by what vessel capture made.—Benjamin C. Dean; U. S. schooner *Dan Smith*.

Where and for what reasons.—At head of Floods Creek; contraband.

The cargo, if any on board.—[None.]

What papers found.—[None.]

Remarks.—One large, flat-bottomed boat; worthless; destroyed.

U. S. SCHOONER DAN SMITH,
December 3, 1862.

I hereby certify that the above-mentioned articles were captured by the undersigned, commanding the U. S. mortar schooner *Dan Smith*, of the Potomac Flotilla, at the time and place designated, and that the above and annexed statement is true in every particular.

BENJ. C. DEAN,
Acting Master, Commanding.

Report of Lieutenant-Commander Magaw, U. S. Navy, commanding gunboats in Rappahannock River, regarding proposed attack upon Port Royal, Va.

Semiofficial.] U. S. S. YANKEE,
Oaken Brow, Rappahannock [River], December 16, 1862—p. m.

DEAR SIR: Yesterday, at the request of Major-General Burnside, we prepared to make an attack on Port Royal. I sent a message to the authorities (a copy and the reply is herewith enclosed).

As we were getting underway this morning to go up I received the following verbal message from the general:

> We are recrossing the river, and both Colonel [Benjamin F.] Davis and yourself must be governed accordingly.

I did not therefore make any demonstration, as an attack would have resulted in the destruction of the town and no result. I expect another attempt on the part of the enemy to drive us down the river, perhaps to-morrow. I have not heard from you but once; that was your telegram in relation to army transportation at the mouth, and you can imagine what the general's messages are, as the above will show. I shall hold my position until I am driven off or get instructions from you or suggestions from Burnside.

The news from the Army is discouraging, and the enemy are in high glee. The *Satellite* and *Cœur de Lion* are at the mouth; the *Teaser* has gone down to communicate; the *Yankee*, *Freeborn*, *Anacostia*, and *Jacob Bell* are here. We are all well, but I am suffering from one of my periodical attacks of rheumatism.

I have the honor to be, yours, faithfully,

SAMUEL MAGAW,
Lieutenant-Commander.

Commodore A. A. HARWOOD,
Commanding Flotilla, etc.

[Enclosures.]

U. S. S. YANKEE, *December 15, 1862.*

A military necessity renders the occupation of the vicinity of Port Royal desirable to our forces.

The destruction of the town probably will be the consequence, and I therefore request that all noncombatants be removed before to-morrow at sunrise.

Very respectfully,

SAMUEL MAGAW,
Lieutenant-Commander, Comdg. Gunboats on the Rappahannock.

MILITARY AND CIVIL AUTHORITIES AT PORT ROYAL, VA.

Your notice to the citizens or military authorities at Port Royal to the effect that Port Royal or its vicinity requires your occupancy has been received, and in absence of any civil authorities I will give notice to the citizens to leave by sunrise to-morrow morning.

Z. S. MCGRUDER,
Lieutenant-Colonel Tenth Virginia Cavalry.

Lieutenant MAGAW.

Signals.

U. S. S. JACOB BELL, *December 17, 1862—9 a. m.*

Smoke in the rear of Port Royal indicates a reenforcement of the enemy there. More fires than usual were seen there last night.

CAMP. [Captain STREET.]

Captain MAGAW.

U. S. S. YANKEE, *December 17, 1862—9 a. m.*

An officer may go to headquarters to-night. Advance until you can discover the force at Port Royal; also a little above there. If you meet with them, fall back to within signal distance.

Captain MAGAW.

Captain STREET.

U. S. S. JACOB BELL, *December 17, 1862—9:50 a. m.*

Enemy are at Pratt's Bluff. Did not see any guns. Fired at infantry behind Pratt's house.

Captain STREET.

Captain MAGAW.

Circular from the Secretary of the Navy regarding rating of contrabands employed in U. S. Navy.

NAVY DEPARTMENT, *December 18, 1862.*

Persons known as contrabands will not be shipped or enlisted in the naval service with any higher rating than that of landsman, but if found qualified after being shipped, may be advanced by the commanding officer of the vessel in which they serve to the ratings of seaman, ordinary seaman, fireman, or coal heaver, if their services are needed in such ratings, and will be entitled to the corresponding pay. They will not be transferred from one vessel to another with a higher rating than that of landsman, but if discharged on termination of enlistment, or from a vessel going out of commission, will retain their advanced rating in the discharge.

GIDEON WELLES,
Secretary of the Navy.

Order of Commodore Harwood, U. S. Navy, commanding Potomac Flotilla, to Acting Master Linnekin, U. S. Navy, commanding U. S. S. Currituck, regarding transportation of ammunition to Rappahannock River.

POTOMAC FLOTILLA,
COMMANDANT'S OFFICE, NAVY YARD,
Washington, December 19, 1862.

SIR: You will proceed to the Rappahannock River with the *Currituck*, and on your arrival there report to Lieutenant Commander Magaw and deliver to him the dispatches and also the ammunition, forwarded according to his requisition.

In passing through the Potomac, if you fall in with Lieutenant-Commander McCrea, show him these orders and receive instructions from him in case of any impediment to the service you are required to perform.

Very respectfully, your obedient servant,

ANDREW A. HARWOOD,
Commodore, Commanding Potomac Flotilla.

Acting Master T. J. LINNEKIN,
Commanding U. S. S. Currituck, Potomac Flotilla.

General Order of Commodore Harwood, U. S. Navy, commanding Potomac Flotilla, granting permission for the landing of military stores.

POTOMAC FLOTILLA, *December 20, 1862.*

The regular army tugs and transports furnished with the naval Potomac pass, duly endorsed by Captain Ferguson, assistant quartermaster, will be permitted to land army subsistence and stores at Aquia Creek and Belle Plain, or at any part of the Virginia shore designated by the military authorities. This authority is not intended to include the transshipment and landing of sutler's stores or to interfere with any regulation of the Treasury Department. A form of the naval Potomac pass, with endorsement to meet the case, is herewith annexed.

ANDREW A. HARWOOD,
Commodore, Commanding Potomac Flotilla.

Lieutenant-Commander E. P. MCCREA, or the
SENIOR NAVAL OFFICER AT OR NEAR AQUIA CREEK
IN THE POTOMAC RIVER.

[Telegram.]

NAVY YARD, WASHINGTON, *December 20, 1862.*
(Received 4:15 p. m.)

I have just received this telegram from General Burnside:

The gunboats may be withdrawn from the Rappahannock at any time you choose.
A. E. BURNSIDE,
Major-General.

Shall I withdraw them?

A. A. HARWOOD,
Commodore.

Hon. SECRETARY OF THE NAVY.

[Telegram.]

NAVY DEPARTMENT, *December 20, 1862.*

Let the gunboats resume their usual duties of blockade, watching especially the mouth of the Rappahannock and other points in that vicinity. Be ready at any time to perform any duty required by General Burnside.

GIDEON WELLES.

Commodore HARWOOD,
Navy Yard, Washington.

Report of Lieutenant-Commander Magaw, U. S. Navy, commanding Second Division Potomac Flotilla, regarding affairs on the Rappahannock.

U. S. S. YANKEE, *December 20, 1862.*

DEAR SIR: I received yesterday your letter of the 11th instant, containing the order in relation to the army supplies at the mouth of the Rappahannock, the same as before telegraphed by you. It is the first communication that I have received from you since the 4th instant.

I enclose the last message from General Burnside. It was received night before last; at the same time I heard that a large body of the enemy had passed on to the road leading from Falmouth to Washington, via Stafford Court-House. I came at once to this place with the *Freeborn* in company, fearing that we might be required to protect the army stores, she stopping to coal at Piney Point.

The *Anacostia*, *Jacob Bell*, and *Teaser* are at Brisco [Bristoe?] mines, about 8 miles below Port Conway. The *Satellite*, with the *Cœur de Lion*, is at the mouth of the river blockading.

Until the *Satellite* went down to protect the army supplies at the mouth I did not know that the mortar schooner had left that point, and that there was no vessel blockading there.

The *Teaser* goes down to Fort Lowry daily and meets the *Cœur de Lion*, both of them returning to their stations before night. In this way the river is examined from Brisco [Bristoe] mines down twice a day.

Lieutenant-Commander McCrea writes me under date of 13th, saying that you wish me to keep you more frequently advised, etc. I assure you that I have written to you by way of General Burnside's headquarters every day, with one exception, since the 5th instant. I have not had communication otherwise since the *Currituck* went up the day after the Oaken Brow affair. The report in relation to that I sent by land.

General Ingalls recalled his transportation; the vessel sailed for Aquia Creek on the 19th. I can see no use for any of the flotilla in the Rappahannock now, or until General Burnside is definitely heard from. The enemy is in force about Port Royal [Va.]; below it squads of cavalry with rifled artillery.

I met the *Currituck* to-day, towed down, just above Piney Point; by her I received your letter of the 19th instant, covering three general orders.

I ordered the *Currituck* to report to Acting Volunteer Lieutenant Hays, senior officer at the mouth of the Rappahannock.

From the nature of my instructions to that portion of the flotilla now in the Rappahannock with regard to ice, I presume that to-day they have all collected at a point below Tappahannock.

Very respectfully, your servant,

SAMUEL MAGAW,
Lieutenant-Commander, etc.

Commodore A. A. HARWOOD,
Commanding Potomac Flotilla.

P. S.—The *Wyandank* passed Fort Lowry yesterday afternoon, before sunset, bound up the Rappahannock. I directed her to give ammunition to the vessels above and return forthwith

S. MAGAW,
Lieutenant-Commander.

[Enclosure.]

Message from General Burnside to Lieutenant-Commander Magaw, brought by a commissioned officer, delivered on the evening of 18th December, 1862, off Brisco [Bristoe] mines, Rappahannock River.

General Burnside wanted me to communicate with the gunboats, but was afraid to send a written dispatch. Tell Captain Magaw that for the present the Army is brought to a standstill; to use his judgment in the case of the coming on of cold weather; that his (General Burnside's) communication with Washington by land, (Stafford Court-House road) was cut off. The Army had recrossed the river and saved all the bridges except a few boats.

The above is the message from Major-General Burnside referred to in my letter of the 19th and received during the night of the 18th December.

SAMUEL MAGAW,
Lieutenant-Commander, etc.

Order of Lieutenant-Commander Magaw, U. S. Navy, to Acting Master Linnekin, U. S. Navy, to blockade the mouth of Rappahannock River.

U. S. S. YANKEE,
Aquia Creek, December 21, 1862.

SIR: You will remain at the mouth of the Rappahannock River until further ordered, maintaining a strict blockade.

Very respectfully,

SAMUEL MAGAW,
Lieutenant-Commander.

Acting Master LINNEKIN,
Commanding Currituck.

General Order of Commodore Harwood, U. S. Navy, commanding Potomac Flotilla, regarding the divisions of his command and their stations.

GENERAL ORDERS, No. 14.

POTOMAC FLOTILLA,
COMMANDANT'S OFFICE, NAVY YARD,
Washington, December 22, 1862.

The following vessels will compose the first division of the Potomac Flotilla, under command of Lieutenant Magaw, U. S. Navy:

Freeborn, Lieutenant-Commander Magaw.
Yankee, Acting Master Ives.
Teaser, Acting Ensign Sheridan.
Resolute, Acting Master Tole.
Eureka, Acting Ensign Brice.
Mortar schooners.—T. A. Ward, Acting Master W. L. Babcock; *Adolph Hugel*, Acting Master J. Van Boskirk.

The limits of the first division will be from Alexandria to Wicomico River, Maryland.

The stations as per General Order book will be guarded as may be necessary.

Second Division, Potomac Flotilla.

Jacob Bell, Acting Master Street (pro tem.).
Satellite, Acting Volunteer Lieutenant P. Hays.

Anacostia, Acting Master Provost.
Currituck, Acting Master Linnekin.
Dragon, Acting Master G. E. Hill.
Reliance, Acting Master Dockray.
Cœur de Lion, Acting Master Brown.
Mortar schooners.—Dan Smith, Acting Master Dean; *George Mangham*, Acting Master Collins.

The stations as per General Order book will be guarded as may be necessary.

Official dispatches will be dated from the station: "———, U. S. S. ———, ——— Station, Potomac Flotilla."

Commanding officers of divisions will inform the commander in chief the names of vessels on their respective stations, and report any changes from one station to another as soon as such changes have been made, as well as the reasons for making it.

Wicomico River and Piney Point will be the coal stations. *Wyandank*, storeship, will be the guard ship at Piney Point till further orders.

Requisitions for ordnance will be made upon her commanding officer.

ANDREW A. HARWOOD,
Commodore, Commanding Potomac Flotilla.

General Order of Commodore Harwood, U. S. Navy, commanding Potomac Flotilla.

GENERAL ORDER.] POTOMAC FLOTILLA,
Navy Yard, Washington, December 22, 1862.

The vessels of the Potomac Flotilla will assume their respective duties in the waters of the Potomac, Rappahannock, and Piankatank rivers. Commanding officers are cautioned against carelessness or inattention on the part of watch officers, as it is well known that a surprise is contemplated by the enemy to capture one or more vessels of the flotilla. Several complaints have been made against the conduct of boats' crews and the officers in charge. In future any accusation against men and officers of the flotilla by persons on shore will be rigidly examined, and the offenders will suffer the extreme penalty if found guilty. Officers will be particular to forward their coal reports, as it is necessary to keep a certain supply on hand.

Strict attention is commanded to the order regarding the coal taken from army vessels, and also general orders from Navy Department, December 3 and 12.

ANDREW A. HARWOOD,
Commodore, Commanding Potomac Flotilla.

Report of Commodore Harwood, U. S. Navy, commanding Potomac Flotilla, of the resumption by the vessels of his command of the usual duties of blockade.

COMMANDANT'S OFFICE, NAVY YARD,
Washington, December 22, 1862.

SIR: I have to report that your order, communicated by telegram, that the Potomac Flotilla should resume their usual duties of blockade, has been executed.

The *Satellite* is stationed at the mouth of the Rappahannock, and orders have been given to observe General Burnside's instructions.

I have the honor to be, with great respect, your obedient servant,

ANDW. A. HARWOOD,
Commodore, Commanding Potomac Flotilla.

Hon. GIDEON WELLES,
Secretary of the Navy.

Instructions from Lieutenant-Commander McCrea, U. S. Navy, commanding Second Division Potomac Flotilla, to Acting Master Street, U. S. Navy, assigned to temporary command of the same.

[U. S. S.] RELIANCE,
Aquia Creek, December 22, 1862.

DEAR SIR: You will take charge of the vessels in the Potomac until I return. Order the *Wyandank* to take guard duty, relieve the *Dan Smith*, order Captain Dean to turn over all information and orders, etc., to Captain McGowan. Place the *Dan Smith* off Herring Creek, *George Mangham* off Breton's Bay, and the *Bell* at the island. You must take a suitable vessel, one that is consigned to Piney Point, and discharge her on Wicomico wharf. Take note of the date of discharge, as I must make a new contract with Mr. Plowden.

Inform Captain McGowan to discharge all light-draft vessels on Piney Point until 800 tons have been discharged from the commencement of discharging. Put about 300 tons on Wicomico wharf. Attend to these matters until I come down, and keep a lookout for any crossing. Any vessel with a pass or letter from Captain [C. B.] Ferguson, quartermaster, or Colonel [D. H.] Rucker, quartermaster, order passed by the guard ship, independent of any custom-house papers.

I shall go to New York to-morrow night and be back by Monday down the river. Meet me at the island if not engaged at any of the coal depots. It is important to fill up the wharves.

I am glad to hear such good accounts of the *Bell*. I shall try and advance you. Say to the officers I am much pleased to hear of their good conduct.

* * * * * * *

Yours, truly,

E. P. MCCREA.

Acting Master W. T. STREET,
Commanding U. S. S. Jacob Bell.

[Telegram.]

AQUIA CREEK, *December 31, 1862—12 m.*

The mortar schooners *Racer* and *Sophronia* have just arrived from Baltimore. I will keep them, supposing you do not want them at the yard.

Captain MAGAW.

Commodore HARWOOD.

Order of Commodore Harwood, U. S. Navy, commanding Potomac Flotilla, to Lieutenant-Commander Magaw, U. S. Navy, commanding First Division, regarding mortar schooners Racer and Sophronia.

NAVY YARD, WASHINGTON, *December 31, 1862.*

SIR: I have received your telegram of this morning in relation to the *Racer* and *Sophronia.*

You will please dispose of these vessels to the best advantage for the present.

I enclose circulars from the Department.

Very respectfully, your obedient servant,

ANDW. A. HARWOOD,
Commodore, Commanding Potomac Flotilla.

Lieutenant-Commander SAML. MAGAW,
Commanding First Division Potomac Flotilla.

Report of Acting Master McGowan, U. S. Navy, commanding U. S. S. Wyandank, regarding coal.

U. S. S. WYANDANK,
Piney Point, January 2, 1863.

SIR: I would respectfully report that in obedience to a verbal order from Lieutenant-Commander S. Magaw to stop the first coal schooner that came along, so as to get coal to proceed to the Rappahannock with, I seized the schooner *Star*, of New York, on the 2d of December, 1862, and took out of her 37 tons of coal, also giving the commanding officers of the *Resolute* and *Dragon* orders to take what they required. The *Resolute* took 15 and the *Dragon* 18 tons. Both vessels had been entirely out of coal for three days, and I had but 1 ton on board this vessel at the time I stopped the schooner.

The *Dragon* having been sent from the Rappahannock by Lieutenant-Commander E. P. McCrea with orders to tow the first coal schooner she came across to the fleet on that river, and knowing that the vessels were nearly if not entirely out of coal, as there was no chance for them to fill up before they started, I gave the commanding officer of that vessel orders to tow the private coal schooner *Kadosh* to their relief.

Hoping this will meet with your approval, I am, very respectfully, your obedient servant,

JOHN MCGOWAN, Jr.,
Acting Master, Commanding.

Commodore A. A. HARWOOD,
Commanding Potomac Flotilla and Navy Yard, Washington, D. C.

Report of Acting Volunteer Lieutenant Hays, U. S. Navy, commanding U. S. S. Satellite, of destruction of a schooner in the Piankatank River.

U. S. S. SATELLITE,
Station H, Potomac Flotilla, January 2, 1863.

SIR: Having gained information of a schooner running the blockade in Piankatank River on the night of the 20th of December, 1862, with a cargo of salt, I proceeded this morning with the steamers *Currituck* and *Anacostia*, accompanied by the *Ella*, up that river about 8 or 10 miles, which was as far as our vessels could go on account of shoal

water. We learned from a prisoner we had on board that the schooner was in a creek some 5 miles below. We immediately proceeded down to the creek and I sent the *Currituck* up about 1½ miles, when she ran ashore. I sent the *Ella* to her assistance to tow her off. At this time the rebels discovered our intentions and set fire to the schooner and destroyed her before we could get to her. We then threw a few shells in that direction.

I afterwards learned on shore that the schooner had been discharged, and her cargo sent to Richmond.

Very respectfully, your obedient servant,

P. HAYS,
Acting Volunteer Lieutenant, Commanding Satellite.

Commodore A. A. HARWOOD,
Commanding Potomac Flotilla and Navy Yard, Washington, D. C.

Report of Commodore Harwood, U. S. Navy, commanding Potomac Flotilla, regarding captured sloop Potter, of Baltimore.

COMMANDANT'S OFFICE, NAVY YARD,
Washington, January 9, 1863.

SIR: Herewith I beg leave to enclose a duplicate certificate of capture, No. 1, of the sloop *Potter*, of Baltimore, by the U. S. S. *Currituck*, on the 3d instant.

The persons and papers have been placed at the disposal of the district court.

I have the honor to be, with great respect, your obedient servant,

A. A. HARWOOD,
Commodore, Commanding Potomac Flotilla.

Hon. GIDEON WELLES,
Secretary of the Navy, Navy Department.

[Enclosure.]

Potomac Flotilla.—Certificate of capture.

Name and character of prize.—Sloop *Potter*, of Baltimore.

By whom and by what vessel capture made.—Thomas J. Linnekin, U. S. S. *Currituck.*

When capture made.—January 3, 1863.

Where and for what reasons.—Between Windmill Point and Smith's Point, between the mouths of the Potomac and the Rappahannock rivers; for not having legal papers, and having on board articles other than that allowed by his permit, and for having taken a cargo to and carried on trade with the blockaded country, as proved by papers found on board, and by the captain's own admission.

The cargo, if any on board.—Oysters, old rags, old brass, old iron, tobacco, raw hides, old copper.

What papers found.—Vouchers 1, 2, 3, 4, 5, and 6. accompanying.

Remarks.—Prisoners' names: William S. Watson, captain; James Banks, cook; William F. Forrest, Solomon Evans.

JANUARY 3, 1863.

I hereby certify that the above-mentioned sloop was captured by the undersigned, commanding the U. S. S. *Currituck*, of the Potomac Flotilla, at the time and place above designated, and that the above and annexed statement is true in every particular.

T. J. LINNEKIN.

Report of Commodore Harwood, U. S. Navy, commanding Potomac Flotilla, transmitting certificate of capture of schooner Exchange.

COMMANDANT'S OFFICE, NAVY YARD,
Washington, January 10, 1863.

SIR: Herewith I beg leave to enclose a duplicate certificate of capture of the schooner *Exchange* by the U. S. S. *Anacostia* on the 28th ultimo.

The persons have been placed at the disposal of the district court.

I have the honor to be, with great respect, your obedient servant,

A. A. HARWOOD,
Commodore, Commanding Potomac Flotilla.

Hon. GIDEON WELLES,
Secretary of the Navy, Navy Department.

[Enclosure.]

Potomac Flotilla.—Certificate of capture.

Name and character of prize.—Schooner *Exchange.*

By whom and by what vessel capture made.—Anacostia.

When capture made.—December 28, 1862.

Where and for what reasons.—Rappahannock River; not having any permit or pass from the Department.

The cargo, if any on board.—None.

What papers found.—None.

Remarks.—There were two men on this vessel when captured, who stated that they came here on account of the weather for harbor, and also stated they were bound for Baltimore, where Mr. Trader, the owner, would meet them, he having the required papers. Their names are James Marchant and William Winder. They having no papers, I seized her as a prize to the United States.

RAPPAHANNOCK RIVER, *January 2, 1863.*

I hereby certify that the above-mentioned schooner was captured by the undersigned, commanding the U. S. S. *Anacostia*, of the Potomac Flotilla, at the time and place above designated, and that the above and annexed statement is true in every particular.

NELSON PROVOST,
Acting Master, Commanding.

Destruction of salt works, January 12, and capture of Confederate schooner Hampton, January 13, 1863, by U. S. S. Currituck.

Report of Commodore Harwood, U. S. Navy, commanding Potomac Flotilla, with enclosures.

COMMANDANT'S OFFICE, NAVY YARD,
Washington, January 19, 1863.

SIR: Your letter* of the 17th instant, indicating Dividing Creek as a place to which contrabandists from Baltimore were taking supplies to the enemy, was duly received.

I have the satisfaction to inform the Department that commendable vigilance has been exercised by the vessels of the flotilla in the quarter

*See p. 214.

referred to. The *Leslie* arrived yesterday with the schooner *Hampton*, of Baltimore, in tow, captured by the *Currituck*, Acting Master Linnekin, on the morning of the 13th instant in Dividing Creek.

The vessel cleared (light), ostensibly for the oyster trade, but took in her cargo, I am informed, at Baltimore. She had on board several passengers, who, from letters found on board, appear to be persons who have been in the habit of passing to and from Virginia.

At the time of the capture of the *Hampton*, a canoe at the same place escaped, but was afterwards taken at Indian Creek; not, however, until the crew had escaped to the woods and the principal part of her cargo had been (it is supposed) thrown overboard.

I have also to report that on the day before these occurrences the *Currituck* broke up for the present an establishment for supplying salt to Richmond by destroying the kettles.

I enclose herewith:

First. A copy of Acting Master Linnekin's report of the transaction just mentioned.

Second. Certificate of capture of the schooner *Hampton*.

Third. Certificate of capture of canoe at Dividing and Indian creeks.

I have the honor to be, with great respect, your obedient servant,

ANDW. A. HARWOOD,
Commodore, Commanding Potomac Flotilla.

Hon. GIDEON WELLES,
Secretary of the Navy.

[Enclosures.]

U. S. S. CURRITUCK,
Dividing Creek, Va., January 12, 1863.

SIR: I beg to report on my arrival here, from information obtained from a negro, I proceeded to the South West Branch and found a large manufactory for salt in a steam sawmill, owned by a man named Oscar Yerby. He has been extensively engaged in supplying Richmond with salt.

I sent a party on shore in charge of the executive officer to destroy the works. They destroyed all the kettles, etc., with the exception of the boiler, which they were unable to destroy, owing to its being very heavily bricked round, and unless we burned the mill and a large quantity of lumber. I left word for Yerby to discontinue the manufacture of salt, otherwise I would raze all his buildings to the ground at some future day. I also ascertained that vessels run in here with contraband goods, very frequently furnishing the inhabitants with all they need.

Not having any chart of the place I did not venture in until to-day; the weather being so moderate I successfully entered. Now, that I am acquainted with the entrance of the creek, I shall keep a sharp lookout as long as I am on this station.

Very respectfully, your obedient servant,

T. J. LINNEKIN,
Acting Master, Commanding.

Commodore A. A. HARWOOD,
Navy Yard, Washington, D. C.

Potomac Flotilla.—Certificate of capture.

Name and character of prize.—Schooner *Hampton*, Deal's Island.

By whom and what vessel capture made.—U. S. S. *Currituck;* T. J. Linnekin, commanding.

When capture made.—January 13, 1863.

Where, and for what reasons.—Dividing Creek, Va.; running the blockade with a general cargo from Baltimore.

The cargo, if any on board.—Miscellaneous freight.

What papers found.—Voucher 1, box containing miscellaneous papers; voucher 2, book supposed to be a tally of part of cargo; voucher 3, $1,650 in bonds and demand notes; voucher 4, $604.35 in bank bills; voucher 5, $130 in bank bills; voucher 6, $26.25 in bank bills; voucher 7, $25 in gold; voucher 8, $2.25 in bills; voucher 9, permanent enrollment, dated at Deal's Island, July 28, 1862; voucher 10, custom-house license, dated at Deal's Island, July 28, 1862; voucher 11, coasting manifest, dated at Deal's Island, December 30, 1862; voucher 12, custom-house permit, dated at Baltimore, January 8, 1863.

Remarks.—Names of prisoners: William L. Gage, of Baltimore; R. F. Crisp, of Baltimore; Fred Toomey, of Baltimore; William Rowe (captain), of Deal's Island; Alex. Webster, cabin boy, of Deal's Island; Wesley Milburn (colored), deck hand, of Deal's Island; Frank Evans (colored), deck hand, of Baltimore; Daniel Rice (colored), deck hand, of Baltimore.

JANUARY 13, 1863.

I hereby certify that the above-mentioned schooner *Hampton* was captured by the undersigned, commanding the U. S. S. *Currituck*, of the Potomac Flotilla, at the time and place above designated, and that above and annexed statement is true in every particular.

T. J. LINNEKIN.

Potomac Flotilla.—Certificate of capture.

Name and character of prize.—A canoe; no name.

By whom and by what vessel capture made.—U. S. S. *Currituck*, T. J. Linnekin, commanding.

When capture made.—January 13, 1863.

Where and for what reasons.—Indian Creek, Va.; running the blockade.

The cargo, if any on board.—Two barrels of whisky.

What papers found.—None.

Remarks.—None.

JANUARY 13, 1863.

I hereby certify that the above-mentioned canoe was captured by the undersigned, commanding the U. S. S. *Currituck*, of the Potomac Flotilla, at the time and place above designated, and that the above and annexed statement is true in every particular.

T. J. LINNEKIN.

Report of Acting Master Linnekin, U. S. Navy, commanding U S. S. Currituck, regarding capture of schooner Hampton.

U. S. S. CURRITUCK,
Dividing Creek, Va., January 13, 1863.

SIR: I have to report the capture at 2 o'clock this morning of the schooner *Hampton*, of Baltimore, Captain William Rowe, laden with a quantity of miscellaneous freight too general to enumerate. I send you a supposed tally of part of the cargo, also a large quantity of documents and money found on the prisoners. The trunk, marked "R. S. Izard," was found in the main hold broken open. I forward it to you

as we found it, taking the precaution to seal it up. My reason in doing so was owing to the large quantity of small articles found in it, including (as I am informed by the surgeon) some valuable drugs. You will find the hatches of the schooner also sealed. There are quite a number of small and valuable articles in the hold. I beg to refer you to the cabin boy, Alexander Webster; he can give you considerable information as to the cargo, etc. I send the money, amounting to $787.85, and promissory notes amounting to $1,650.41, in charge of Paymaster Frank Clarke, of this vessel.

Very respectfully, your obedient servant,

T. J. LINNEKIN,
Acting Master, Commanding.

Commodore A. A. HARWOOD,
Commanding Potomac Flotilla, Washington, D. C.

Commendatory letter from Commodore Harwood, U. S. Navy, commanding Potomac Flotilla, to Acting Master Linnekin, U. S. Navy, commanding U. S. S. Currituck.

NAVY YARD, WASHINGTON, *January 19, 1863.*

SIR: Your letters of the 12th and 13th instant, announcing the partial destruction of salt works and the capture of the schooner *Hampton* and a canoe engaged in smuggling, have been received.

I had just received from the Navy Department information of extensive operations at Dividing Creek, and it was particularly gratifying to me to give the Department satisfactory evidence that the Potomac Flotilla was on the alert.

Be on your guard when at anchor near the land against surprises. Have your boarding nettings made and regularly triced up, and your arms always in order and ready for use.

Do not at any time or for any cause relax your vigilance.

Yours, respectfully,

ANDW. A. HARWOOD,
Commodore, Commanding Potomac Flotilla.

Acting Master T. J. LINNEKIN,
Commanding U. S. S. Currituck.

Letter from Commodore Harwood, U. S. Navy, commanding Potomac Flotilla, to the Secretary of the Navy, regarding affairs of the Flotilla.

COMMANDANT'S OFFICE, NAVY YARD,
Washington, January 14, 1863.

SIR: The letter from Amos Tuck, esq., to his Excellency the President, and its enclosures, transmitted in your letter of the 8th instant, are herewith returned.

The same communication, word for word, had reached me through Acting Master Provost, of the U. S. S. *Anacostia.*

Lieutenant-Commander McCrea sent two vessels and launches for the purpose of cutting the vessel out of Stutt's Creek that ran the blockade some time ago, but when within one-quarter of a mile of her, the enemy, discovering his intention, set fire to the vessel. An expedition is now being organized with launches which will have some moral effect if no actual result upon the people around the waters of the Piankatank.

The smuggling operations in this quarter will be closely watched, and additional preparations have been made to deal with armed parties of insurrectionists.

I have the honor to be, with great respect, your obedient servant,

ANDW. A. HARWOOD,
Commodore, Commanding Potomac Flotilla.

Hon. GIDEON WELLES,
Secretary of the Navy, Navy Department.

Letter from Lieutenant-Commander Magaw, U. S. Navy, commanding First Division, to Commodore Harwood, U. S. Navy, commanding Potomac Flotilla, relative to cooperation with the Army at Fredericksburg, Va.

Semiofficial and confidential.] [U. S. S.] FREEBORN,
Off Aquia Creek, January 14, 1863—8 p. m.

DEAR SIR: General Burnside has at last asked us to cooperate, and I am hourly expecting definite instructions. I have asked for and gotten four army tugs for the mortar vessels.

The present understanding is that we are to make a feint at some eligible point on the Rappahannock, accompanied by a body of raw troops in transports, and the Army of the Potomac is to cross the Rappahannock at fords above Fredericksburg. We are prepared to move at once, and I shall take all the available force, leaving the mouth of the Rappahannock blockaded.

I will send you a copy of my instructions from General Burnside as soon as I receive them.

We will do our best.

Yours, respectfully and faithfully,

SAMUEL MAGAW,
Lieutenant-Commander, etc.

Commodore ANDREW A. HARWOOD,
Commanding Potomac Flotilla and Navy Yard, Washington.

Letter from Commodore Harwood, U. S. Navy, commanding Potomac Flotilla, to Lieutenant-Commander Magaw, U. S Navy, commanding First Division, regarding cooperation with General Burnside, U. S. Army, and vigilance against surprises of the enemy.

Semiofficial.] NAVY YARD, WASHINGTON, *January 17, 1863.*

SIR: I have received your semiofficial and confidential dispatch, and immediately sent Captain McCrea down the river in order that he might send me any intelligence necessary for the efficient supply of the flotilla and to confer with you.

You are aware that the Department directs that you accede to the wishes of General Burnside in every particular in which it is practicable to do so. I feel confident you will do your best to help the good cause and maintain the honor of the Navy.

I wish you to exercise vigilance in keeping the commanders, especially of the small tugs and other vessels, on the alert for night surprises and attack by boarding at any time. The disaster at Galveston will probably put it in the heads of the enemy in the neighborhood of the Rappahannock to try their hand in the same line.

The boarding nettings should be in order and in place, the howitzers and small arms loaded, and the idea generally inculcated that it will be a disgrace of the worst kind to be caught napping.

Reports have been rife in the city of the crossing of the Army of the Potomac, but not having heard anything more from you I have considered the rumors as the shadows of coming events.

I have been detaining the *King Philip* for the regulation paper, but if it does not come by 3 o'clock I can detain her no longer.

I wish to draw your attention to the rule of the Department about forwarding letters, Article II of the General Order regulating correspondence.

You will see that in all cases presented for the decision of the Department an opinion is required.

Yours, with regard, truly,

ANDW. A. HARWOOD.

Lieutenant-Commander S. MAGAW, U. S. Navy.

Order of the Secretary of the Navy to Commodore Harwood, U. S. Navy, commanding Potomac Flotilla, enjoining special vigilance at Dividing Creek, Virginia.

NAVY DEPARTMENT, *January 17, 1863.*

SIR: An intercepted letter from a noted rebel source indicates Dividing Creek, between the mouths of the Rappahannock and Potomac rivers, as a place into which vessels with a clearance for Baltimore, but with supplies for the rebels, can run. It would be well to give instructions to the vessels upon that station to look to that point.

Very respectfully,

GIDEON WELLES,
Secretary of the Navy.

Commodore A. A. HARWOOD,
Commandant Navy Yard, Washington, D. C.

Report of Lieutenant-Commander McCrea, U. S. Navy, commanding Second Division Potomac Flotilla, regarding affairs of his command.

U. S. S. JACOB BELL,
Potomac Flotilla, January 18, 1863.

SIR: I have the honor to make you the following report:

I arrived at Piney Point this day, having stopped at Aquia Creek en route, and detained by low tide in Dukehart's Channel, being aground for some hours. Lieutenant-Commander Magaw will take two of my mortar schooners at some future time for a specified purpose, which will somewhat disarrange my plans for the *Wyandank*.

The launches will go to the Rappahannock in a day or two, though I will be governed a great deal by Lieutenant-Commander Magaw's movements.

I have sent your letter in part to Acting Master Dean, disapproving of his conduct in regard to the revenue steamer *Hercules*, and will report further regarding her when I next visit the Rappahannock vessels. I trust we will soon receive light-draft vessels with coal, as a demand on the coal pile will soon be made. There is now at the depot

275 tons this day. The *Satellite* is here. I have ordered a survey upon her pillow blocks, reported damaged. Should she not be able to go to the Rappahannock she will relieve the *Wyandank* as guard ship. I would earnestly request an immediate return of the *Wyandank* as soon as filled with provisions, as two or three vessels have no flour or beans and other necessary articles.

The *Currituck* is here for coal. She leaves to-morrow for her station in the Rappahannock. The *Anacostia* is in the Rappahannock also.

I have sent a copy of your instructions to the vessels regarding revenue vessels.

The *King Philip* will leave to-morrow for Washington.

Very respectfully, your obedient servant,

E. P. McCREA,
Lieutenant-Commander and Adjutant, Second Division.

Commodore A. A. HARWOOD,
Commanding Potomac Flotilla.

Report of Acting Master Linnekin, U. S. Navy, commanding U. S. S. Currituck, of captures made by that vessel.

U. S. S. CURRITUCK,
Indian Creek, Va., January 20, 1863.

SIR: I beg to report I left the Wicomico this morning at daybreak for the Rappahannock with mails for the *Anacostia*. On passing this place I saw a canoe standing in and immediately gave chase. On my getting inside we descried her about one-half mile farther up the creek. I immediately sent two boats in charge of the executive officer, who found her on the beach, the goods removed, and the crew escaped. They succeeded, however, with the assistance of a negro, in finding the goods and another canoe, which I am informed ran the blockade a few hours previously. On referring to the accompanying index, you will perceive there were sufficient goods captured to freight the two canoes. Considering the canoes worthless, I have retained one and given the other to the *Anacostia;* they may be useful in navigating the numerous creeks on this coast.

Very respectfully, your obedient servant,

T. J. LINNEKIN,
Acting Master, Commanding.

Commodore A. A. HARWOOD,
Commanding Potomac Flotilla, Navy Yard, Washington, D. C.

Statement of George R. Davis, esq., commanding steam tug Atlantic, regarding the loss of barges J. C. Davis and Liberty in Potomac River.

U. S. SCHOONER DAN SMITH,
Station G, St. Mary's River, January 21, 1863.

This is to certify that I, George R. Davis, of the steam tug *Atlantic*, of Philadelphia [Baltimore?], chartered by Government, left Aquia Creek on the 15th instant, bound to Baltimore, with six barges in tow from the quartermaster's department. The weather being bad, I

anchored at Cornfield Harbor at 11 p. m. The barges broke adrift from this anchorage; [I] picked up three and towed them into St. Mary's River. Arrived at St. Mary's River at 4 a. m of date. At 1 p. m. I started in pursuit of said lost barges, and found that two of them, the *J. C. Davis*, of Philadelphia, and *Liberty*, of Reading, Pa., had fallen into the hands of the enemy at Coan River, Virginia; that they had plundered the barges, robbed the men of their money, clothing, and provisions, as I learned from Captain William Kerkeslegen, of barge *Flag of our Union*. I saw the men on said barges, but could not get them off, fearing an attack from the enemy and the capture of my boat; I was forced to abandon them.

GEORGE R. DAVIS,
Commanding Steam Tug Atlantic, of Baltimore [Philadelphia ?].

Statement of the captains of barges J. C. Davis and Liberty, regarding the loss of their vessels in the Potomac River.

U. S. SCHOONER DAN SMITH,
St. Mary's River, Station G, January 23, 1863.

This is to certify that I, Capt. Martin O'Brien, of the barge *J. C. Davis*, of Philadelphia, and Samuel Care, captain pro tem of barge *Liberty*, of Reading, left Belle Plain on the 15th instant, towed by steam tug *Atlantic*, Captain Davis, bound to Baltimore. On the 18th instant we anchored at Cornfield Harbor, Maryland. On the 20th instant, wind blowing heavy, at 9 p. m. we broke adrift from our anchorage and drifted to Coan River, Virginia, and on the 21st were boarded by the enemy, who plundered us of our money, clothing, and provisions, and took the barge *Liberty* about 4 miles up the creek, the *J. C. Davis* being aground at the time. We then secreted ourselves in the woods until taken off by your boat. We found it impossible to save the boats and they were set fire to and destroyed by your boat's crew. The above statement is correct in every particular.

his
MARTIN x O'BRIEN,
mark.
Captain of Barge J. C. Davis.
SAMUEL CARE,
Captain of Barge Liberty.

Witness:
F. L. HARRIS,
Acting Ensign, Executive Officer.

Report of Commodore Harwood, U. S. Navy, commanding Potomac Flotilla, of the destruction of the barges J. C. Davis and Liberty, and rescue of crews.

POTOMAC FLOTILLA,
COMMANDANT'S OFFICE, NAVY YARD,
Washington, January 26, 1863.

SIR: On the 22d instant, Acting Master Dean, commanding the U. S. schooner *Dan Smith*, stationed at St. Mary's River, was informed by the master of the steamer *Atlantic* that he had lost two barges, and

that they were in Coan River, Virginia, in possession of the enemy, and that the crews had been stripped of their money, clothes, and provisions, and the boats of their sails, rigging, etc.

Acting Ensign Harris was ordered to Coan River with an armed cutter to rescue the crews and recapture or destroy the boats. He found the boats in possession of the rebels (who retired at his approach), one 4 and the other 7 miles up a creek, and not being able to save them he destroyed them by fire.

He rescued the crews of the barges, whom he found secreted in the woods. They were restored to their vessel, the *Atlantic*, described as being in Government employ, which vessel has returned to Baltimore.

I have the honor to be, with great respect, your obedient servant,

ANDW. A. HARWOOD,
Commodore, Commanding Potomac Flotilla.

Hon. GIDEON WELLES,
Secretary of the Navy, Navy Department.

Report of Lieutenant-Commander McCrea, U. S. Navy, commanding Second Division Potomac Flotilla, regarding affairs of his command and violation of the blockade.

BLAKISTONE ISLAND,
Potomac Flotilla, January 23, 1863.

SIR: The *King Philip* arrived to-day with your several dispatches. I had already ordered an acting master's mate (E. Jones) to the *George Mangham*, and therefore have ordered Acting Master's Mate Marshall to the *Jacob Bell* on temporary service.

I have no means at present to communicate with the *Anacostia* or *Currituck*, having no tugs or vessels to send around, consequently have temporarily placed the officers and men destined for said vessels aboard those in the Potomac until an opportunity arises for delivering them. The Jews are again commencing to cross the river. They carry money across—Treasury notes and Southern money—and return with gold and silver. My small force and length of coast to guard is of but little avail. A detective in the daily Leonardtown stage would be of great use. It leaves Washington early every morning.

Very respectfully, your obedient servant,

E. P. MCCREA,
Lieutenant-Commander and Adjutant.

Commodore A. A. HARWOOD,
Commanding Potomac Flotilla.

Report of Lieutenant-Commander McCrea, U. S. Navy, commanding Second Division Potomac Flotilla, regarding captures.

U. S. S. JACOB BELL,
Potomac Flotilla, January 26, 1863.

SIR: I send the *Jacob Bell* up to Washington with nineteen prisoners, captured within the last three days crossing the river. I send a mail, which was thrown overboard but saved in time uninjured. I refer you to the "Remarks" in certificate of capture. I would like more vessels,

if possible. Could you spare the *King Philip* for a few days? I would like her placed at my disposition. I have to remain in Leonardtown an indefinite period, and I purpose to send this vessel cruising and remain on shore. The *King Philip* would be of service in bringing me away and taking up any prisoners captured by the vessels. I am obliged to send up a large number of prisoners, for the vessels can not keep them aboard. Your dispatches per *Reliance* were received last night. The *Reliance* has gone to the Rappahannock with mails, etc.

Very respectfully, your obedient servant,

E. P. McCREA,
Lieutenant-Commander and Adjutant.

Commodore A. A. HARWOOD,
Commanding Potomac Flotilla.

Report of Lieutenant-Commander McCrea, U. S. Navy, commanding Second Division Potomac Flotilla, regarding captures.

BRETON'S BAY, *January 27, 1863.*

SIR: I have the honor to forward you per *Reliance* thirteen prisoners and two sloops, with goods, etc. Please to send the *Reliance* back as soon as possible.

Very respectfully, your obedient servant,

E. P. McCREA,
Lieutenant-Commander, Second Division, and Adjutant.

Commodore A. A. HARWOOD,
Commanding Potomac Flotilla.

Report of Commodore Harwood, U. S. Navy, commanding Potomac Flotilla, regarding prisoners.

POTOMAC FLOTILLA,
COMMANDANT'S OFFICE, NAVY YARD,
Washington, January 28, 1863.

SIR: I have to report the arrival yesterday afternoon of the U. S. S. *Jacob Bell*, with twenty-three prisoners and the contraband goods mentioned in the enclosed certificate of capture.

One of these prisoners, W. T. Littlepage, was captured last November and consigned to the military authorities. He has returned to his business of running the blockade, and, as I presume there is no military court to try the offense, I have placed him, with the rest, in the hands of the district court.

I take this opportunity to remark that the disposal of prisoners has been an embarrassing one to me, as, after taking great pains to diminish the contraband trade, I find that the regular runners contrive to get off with a short confinement and that I do not receive any notice of their release.

Two of the men on the certificate of capture, William Delano and William Short, are, I think, notorious sympathizers and contrabandists, and I should like to have an opportunity of identifying them, and, if they prove to be the persons mentioned in certain correspondence which has passed through my hands, they ought not to be released without giving heavy bonds for their future behavior.

I regret to say that the contraband trade is reviving and that it can not be effectually checked without more vessels.

I have ordered the *King Philip*, which is only fit for river work, for temporary service in the river.

I have the honor to be, with great respect, your obedient servant,

ANDW. A. HARWOOD,
Commodore, Commanding Potomac Flotilla.

Hon. GIDEON WELLES,
Secretary of the Navy.

[Endorsement.]

Commodore Harwood should have proper facilities for identifying the persons mentioned, and every available assistance and aid in checking the contraband traffic.

[Enclosure.]

Potomac Flotilla.—Certificates of capture.

Name and character of the prize.—Boat No. 1; no name. Prisoners: W. Walter Ward, T. F. Kater, Raymond Davis, Coleman Hecht, A. Jackson, M. Sleigenhammer, A. Frenkle, W. Langley, George Hammitt, W. Lawrence (negro), John W. Pentz, Walter Barnes (negroes).

By whom and by what vessel capture made.—James McDonald, acting master's mate.

When capture made.—January 24, 1863.

Where and for what reasons.—Off Posey's Bluff, Potomac River.

The cargo, if any on board.—Three barrels whisky, 4 boxes, 2 trunks, 4 valises, 3 carpetbags, 1 bag.

What papers found.—None.

Remarks.—Boat captured while running the blockade. Boat destroyed.

Name and character of the prize.—Boat No. 2; no name. Prisoners: W. T. Littlepage, D. C. Gardner, William H. Gurge.

By whom and by what vessel capture made.—Erick Gabrielson, acting master's mate.

When capture made.—January 25, 1863.

Where and for what reasons.—Off Ragged Point, Potomac River.

The cargo, if any on board.—Three barrels whisky, 3 kegs, 1 bale twine, 1 bag coffee, 3 valises.

What papers found.—None.

Remarks.—Boat captured while running the blockade. Boat destroyed; 1 valise empty.

Name and character of the prize.—Boat No. 3; no name. Prisoners: William Delano, William H. Short, William Thompson.

By whom and by what vessel capture made.—Erick Gabrielson, acting master's mate.

When capture made.—January 25, 1863.

Where and for what reasons.—Off Floods Creek, Potomac River.

The cargo, if any on board.—Six boxes, 4 bags shot.

What papers found.—None.

Remarks.—Boat captured while running the blockade. Boat destroyed. Articles not specified; contents unknown.

STATION F, *January 26, 1863.*

I hereby certify that the above-mentioned prisoners and goods were captured by the undersigned, commanding the U. S. schooner *George Mangham*, of the Potomac Flotilla, at the time and place above designated, and that the above and annexed statement is true in every particular.

JOHN COLLINS, Jr.
Acting Master, Commanding.

Report of Commodore Harwood, U. S. Navy, commanding Potomac Flotilla, transmitting certificates of capture.

POTOMAC FLOTILLA,
COMMANDANT'S OFFICE, NAVY YARD,
Washington, January 30, 1863.

SIR: I beg leave to forward for the information of the Department a certificate of capture made by the U. S. S. *Currituck* on the 20th instant.

The goods are now at this yard.

I have the honor to be, with great respect, your obedient servant,

ANDW. A. HARWOOD,
Commodore, Commanding Potomac Flotilla.

Hon. GIDEON WELLES,
Secretary of the Navy, Navy Department.

[Enclosures.]

Potomac Flotilla.—Certificates of capture.

Name and character of the prize.—Two canoes; no name.

By whom and by what vessel capture made.—Currituck; T. J. Linnekin, commanding.

When capture made.—January 20, 1863.

Where and for what reasons.—Indian Creek, Virginia; employed in running the blockade.

The cargo, if any on board.—None.

What papers found.—None.

Name and character of the prize.—Miscellaneous freight.

By whom and by what vessel capture made.—Currituck; T. J. Linnekin, commanding.

When capture made.—January 20, 1863.

Where and for what reasons.—Indian Creek, Virginia.

The cargo, if any on board.—[None.]

What papers found.—None.

Remarks.—See schedule attached.

JANUARY 20, 1863.

I hereby certify that the above-mentioned two canoes and a lot of miscellaneous freight were captured by the undersigned, commanding the U. S. S. *Currituck*, of the Potomac Flotilla, at the time and place above designated, and that the above and annexed statement is true in every particular.

T. J. LINNEKIN.

Captures made by U. S. S. Currituck, January 23 and 25, 1863.

Report of Commodore Harwood, U. S. Navy, commanding Potomac Flotilla, transmitting certificates of capture.

POTOMAC FLOTILLA,
COMMANDANT'S OFFICE, NAVY YARD,
Washington, January 30, 1863.

SIR: I enclose for the information of the Department a certificate of capture of a sloop and nine canoes, with thirteen prisoners and a quantity of contraband goods, by the *Currituck*. I have this day placed them in the hands of the civil authorities.

All the captures have been made between the mouths of the Potomac and the Piankatank rivers.

In a letter from Acting Master Linnekin, dated 23d instant, then at the mouth of Jackson Creek, in the Piankatank River, [he reports] that in the South West Branch they found a sloop anchored and scuttled in two places. Boats were sent to bring her out. The leaks were stopped and the water pumped out of the hold.

A party was sent on shore in search of the goods taken from the sloop, but without success; they succeeded, however, in capturing two prisoners.

While towing the sloop off, the party were attacked by about thirty riflemen from a thick woods, who kept up a lively fire, calling for Acting Master's Mate Nelson to give up the sloop. He very coolly and bravely brought her off under a heavy fire, steering himself.

Fortunately, no one was hurt.

The tow being for part of the time between the enemy and the *Currituck* she could not open on them until they cleared the creek. The woods were then shelled, but with what result is not known.

In subsequent letter, dated January 26, Acting Master Linnekin reports the capture of nine canoes in Indian, Barnes, and Tabbs [Tapp's] creeks, all situated between the mouths of the Rappahannock and the Potomac.

These canoes were full of freight, which has been brought to the yard.

I have the honor to be, with great respect, your obedient servant,

ANDW. A. HARWOOD,
Commodore, Commanding, etc.

Hon. GIDEON WELLES,
Secretary of the Navy.

[Enclosures.]

Potomac Flotilla.—Certificates of capture.

Name and character of the prize.—Two canoes; no name.

By whom and by what vessel capture made.—U. S. S. *Currituck;* T. J. Linnekin, commanding.

When capture made.—January 25, 1863.

Where and for what reasons.—Off Indian Creek, Virginia; running the blockade.

The cargo, if any on board.—Miscellaneous freight.

What papers found.—One memorandum book, containing tally of part of the cargo, voucher 1.

—

Name and character of the prize.—Five canoes; no name.

By whom and by what vessel capture made.—U. S. S. *Currituck;* T. J. Linnekin, commanding.

When capture made.—January 25, 1863.

Where and for what reasons.—Barnes Creek, Virginia; running the blockade.

The cargo, if any on board.—Miscellaneous freight.

What papers found.—None.

—

Name and character of the prize.—Sloop *Queen of the Fleet.*

By whom and by what vessel capture made.—U. S. S. *Currituck;* T. J. Linnekin, commanding.

When capture made.—January 25, 1863.

Where and for what reasons.—Tabb's [Tapp's] Creek, Virginia; running the blockade.

The cargo, if any on board.—None.

What papers found.—$1,314 in bank bills, voucher 2.

—

Name and character of the prize.—Two canoes; no name.

By whom and by what vessel capture made.—U. S. S. *Currituck;* T. J. Linnekin, commanding.

When capture made.—January 25, 1863.

Where and for what reasons.—Tabb's [Tapp's] Creek, Virginia; running the blockade.

The cargo, if any on board,—Miscellaneous freight.

What papers found.—None.

Remarks.—Names of the prisoners: John A. Scott, James Taylor, D. S. Johnson, James Holden, Samuel Johnson, Robert G. Stewart, Isaiah Johnson, Julius C. White, John W. Taylor, Aaron Lewis, George Taylor, William Jackson, Samuel C. Taylor.

JANUARY 26, 1863.

I hereby certify that the above-mentioned sloop and nine canoes were captured by the undersigned, commanding the U. S. S. *Currituck*, of the Potomac Flotilla, at the time and place above designated, and that the above and annexed statement is true in every particular.

T. J. LINNEKIN.

List of goods captured by the U. S. S. Currituck at Indian Creek, Virginia, January 20, 1863.

One barrel containing 9 overcoats and 24 pair gaiters.

One barrel containing 40¾ yards gray cloth, 201 yards prints, 10 undershirts.

Two boxes soda.

One box containing 2 ounces quinine and 2 pounds magnesia.

One box containing padlocks and nails.

One box containing 223 yards prints, 42 yards red flannel, 39¼ yards bleached cotton, and 12 pair ladies' gaiters.

One box containing 31 pair hose, 209 yards print, 25 yards linen, 27 yards white flannel, and 27½ yards gray cloth.

One box containing 7½ dozen gaiters.

One box containing 67 skins leather.

One box containing 12 hats, 3 packages sundries, 3 pair gauntlets, 1 box shoes, 1 box soap, 189¼ yards prints, 2 dozen hose, 18 pair shoes.

One box containing 50 yards prints, 3 pair gaiters, 4 pair rubbers.

Loose: Two coils cordage, 3 barrels whisky.

Report of Acting Master Linnekin, U. S. Navy, commanding U. S. S. Currituck.

U. S. S. CURRITUCK,
Piankatank River, Virginia, January 23, 1863.

SIR: At daybreak this morning, as I lay at the mouth of the Rappahannock, I saw two canoes standing in for this place. I at once weighed anchor and gave chase. Owing to a heavy fog we lost sight of them in a short time. I anchored at the mouth of Jackson Creek on this river, supposing them to have run in there. I sent the gig and second cutter, in charge of Mr. Nelson, the executive officer, in search of them, under cover of our guns. On landing they ascertained from a negro that a sloop was lying in the South West Branch, which they found anchored, and scuttled in two places. They at once stopped the leaks and pumped the water out of her hold. Mr. Felix, master's mate, in charge of the second cutter, went in search of the goods taken from the sloop, but without success. As he landed he saw about twenty men running in different directions, also three of the rebel cavalry, one of whom took to flight, supposed to be a Colonel Chouan [Chinn?], of the rebel cavalry. He captured two prisoners, Riley Christopher, a rebel soldier, and James Ewell, of Accomac Creek, Virginia, the owner of the sloop. The latter had a Sharps rifle, which he dropped as Mr. Felix called on them to surrender; he asserts he had no intention of using it, and says it was given to him by the colonel to fire on our men. Christopher (the other prisoner) also states the colonel gave him a rifle for the same purpose, which he threw away on seeing our men landing. Immediately after this Mr. Nelson shoved off and got the sloop underway, having the gig in tow, sending the second cutter ahead. When abreast of a point covered with thick woods, they were suddenly attacked by party of about thirty riflemen, who kept firing rapidly and calling on Mr. Nelson to give up the sloop. He replied by ordering his men to fire, and bravely kept his place at the helm under a heavy fire, until it became so rapid he had to steer from the cabin. He kept on his course, his men keeping up a rapid fire from the hold of the sloop and from the gig in reply to that of the enemy, who did not cease firing until they were out of range. I am happy to inform you none of our party were injured.

As the boats were between this vessel and the enemy I could not open on them until they cleared the creek. I then shelled the woods for about thirty minutes, with what success I was unable to ascertain.

I enclose a note found on the person of Riley Christopher.

Very respectfully, your obedient servant,

T. J. LINNEKIN,
Acting Master, Commanding.

Commodore A. A. HARWOOD,
Commanding Potomac Flotilla.

Report of Acting Master Linnekin, U. S. Navy, commanding U. S. S. Currituck.

U. S. S. CURRITUCK,
Indian Creek, Virginia, January 26, 1863.

SIR: I have to inform you I left Dividing Creek yesterday at daybreak for this place. On my way down I discovered two canoes standing in. I fired a gun at them, which brought them to. They were both laden with valuable miscellaneous freight, which, I am informed by one of the five men captured cost $5,000 at Baltimore. On anchoring in this creek I dispatched the gig and second cutter, in charge of Ensign

Nelson, the executive officer, to explore Barnes Creek. They succeeded in discovering five canoes, all loaded with miscellaneous freight. The crews all escaped to the woods.

About 10 o'clock last night two negroes came off from shore, and informed me that a sloop and two canoes were lying in Tabb's [Tapp's] Creek, about 2 miles from where I lay. I at once sent a party in search of them, the negroes acting as pilots. They succeeded in capturing them, and all the crew, with one exception. The canoes were full of freight. The sloop had disposed of hers, but I found on the person of the captain $1,314, which I send you in charge of Master's Mate Ambrose Felix, prize master; also a mail and some newspapers found on board.

I am, very respectfully, your obedient servant,

T. J. LINNEKIN,
Acting Master, Commanding.

Commodore A. A. HARWOOD,
Commanding Potomac Flotilla, Washington, D. C.

Letter from the Secretary of the Navy to Commodore Harwood, U. S. Navy, commanding Potomac Flotilla, regarding the crossing of Potomac River by deserters.

NAVY DEPARTMENT, *February 2, 1863.*

SIR: I transmit herewith for your information a copy of a telegram to General Heintzelman, relative to deserters crossing the Potomac on rafts, between Quantico and Chopawamsic creeks.

Very respectfully,

GIDEON WELLES,
Secretary of the Navy.

Commodore A. A. HARWOOD,
Commandant Navy Yard, Washington, D. C.

[Enclosure.—Telegram.]

DUMFRIES, *January 25, 1863.*

Am informed that quite a number of men cross the Potomac between Quantico and the Chopawamsic creeks on rafts into Maryland. Can not one of the blockading boats be put to watch between those points? Excuse the suggestion, but I feel a personal pride in putting a stop to desertions.

CHARLES CANDY,
Colonel, Commanding Post.

General HEINTZELMAN.

[Endorsement.]

JANUARY 31, 1863.

Respectfully referred to the Secretary of the Navy for his information.

H. W. HALLECK,
General in Chief.

Report of Commodore Harwood, U. S. Navy, commanding Potomac Flotilla, regarding prevention of desertions from the Army.

COMMANDANT'S OFFICE, NAVY YARD,
Washington, February 3, 1863.

SIR: I have received your letter of the 2d instant, enclosing a telegram in relation to army deserters crossing the Potomac between Quantico and Chopawamsic creeks.

I have given instructions to Lieutenant-Commander Magaw to aid, as far as it may be in his power, in preventing desertions from the Army.

I have the honor to be, with great respect, your obedient servant,

ANDW. A. HARWOOD.

Hon. GIDEON WELLES,
Secretary of the Navy.

Report of Commodore Harwood, U. S. Navy, commanding Potomac Flotilla, transmitting certificate of capture.

POTOMAC FLOTILLA,
COMMANDANT'S OFFICE, NAVY YARD,
Washington, February 4, 1863.

SIR: I forward certificate of capture, just received, made by the U. S. schooner *George Mangham*, Acting Master John Collins, jr., on 26th ultimo; also a certificate of capture made by the U. S. schooner *Dan Smith*, Acting Master Benjamin C. Dean, on 2d instant.

The prize goods are now at this yard, and the prisoners were turned over to the prize commissioners some days ago.

I have the honor to be, with great respect, your obedient servant,

ANDW. A. HARWOOD,
Commodore, Commanding Potomac Flotilla.

Hon. GIDEON WELLES,
Secretary of the Navy, Navy Department.

[Enclosures.]

Potomac Flotilla.—Certificate of capture.

Name and character of the prize.—One boat; no name. Names of prisoners captured with boat: Albert Ball, George Thompson, William Thompson, A. Lincoln—all colored.

By whom and by what vessel capture made.—James McDonald, acting master's mate.

When capture made.—January 26, 1863.

Where and for what reasons.—St. Clement's Bay; intending to run the blockade.

The cargo, if any on board.—Five barrels of whisky, 2 bags coffee, 1 bag pepper, 5 bags shot, 4 boxes (contents unknown).

What papers found.—None.

Remarks.—Boat worthless and destroyed; boat and goods hauled up on the beach when captured.

STATION F, POTOMAC FLOTILLA, *January 26, 1863.*

I hereby certify that the above-mentioned goods and prisoners were captured by the undersigned, commanding the U. S. schooner *George Mangham*, of the Potomac Flotilla, at the time and place above designated, and that the above and annexed statement is true in every particular.

JOHN COLLINS, Jr.,
Acting Master, Commanding.

Potomac Flotilla.—Certificate of capture.

Name and character of the prize.—Three boxes dry goods, 3 boxes candles, 1 box soap, 1 barrel sugar.

By whom and by what vessel capture made.—U. S. schooner *Dan Smith.*
When capture made.—January 31, 1863.
Where and for what reasons.—Potomac River; contraband.
The cargo, if any on board.—[None.]
What papers found.—[None.]
Remarks.—I ordered Acting Master's Mate William H. Hunt out to reconnoiter in the Potomac River. He reported that he found said goods, part in a canoe and part on the beach at Cook's Pond, on the Maryland shore, which he seized and brought on board this vessel and also two boats considered of no value.

JANUARY 31, 1863.

I hereby certify that the above-mentioned goods were captured by the undersigned, commanding the U. S. schooner *Dan Smith*, of the Potomac Flotilla, at the time and place above designated, and that the above and annexed statement is true in every particular.

[BENJ. C. DEAN.]

Letter from the Secretary of the Navy to Commodore Harwood, U. S. Navy, commanding Potomac Flotilla, transmitting information regarding smuggling.

NAVY DEPARTMENT, *February 4, 1863.*

SIR: I transmit herewith a copy of a letter received from General Haupt, in reference to a smuggling business that is done near the mouth of the Potomac, opposite St. George's Island.

Very respectfully, your obedient servant,

GIDEON WELLES,
Secretary of the Navy.

Commodore A. A. HARWOOD,
Commanding Potomac Flotilla, Washington.

[Enclosure.]

WAR DEPARTMENT,
U. S. Military Railroads, January 31, 1863.

[SIR:] I am informed that an extensive smuggling business is done near the mouth of the Potomac, opposite St. George's Island, in small boats, which are secreted in the creeks or drawn up in the bushes and used at night; that in this way mails are carried and many wagonloads of shoes and other necessaries transported to Richmond. The trade could be broken up, or seriously interfered with, by searching for and seizing all the boats and by the establishment of an efficient river patrol.

Yours, very respectfully,

H. HAUPT.

Hon. GIDEON WELLES,
Secretary of the Navy.

Report of Commodore Harwood, U. S. Navy, Commanding Potomac Flotilla, regarding prisoners captured by U. S. schooner Dan Smith and enclosing reports of commanding officer of said vessel.

COMMANDANT'S OFFICE, NAVY YARD,
Washington, February 10, 1863.

SIR: The *King Philip* arrived on Sunday night with the following prisoners, arrested in the act of landing from the Virginia shore, by a party from the U. S schooner *Dan Smith:*

The Rev. J. B. B. Wilmer, formerly a chaplain in the U. S. Navy.

Maurice Clagett, of Richmond, Va.

William Bayley (eight months in rebel Army).

John A. Hill, California.

William Ashton, an English subject provided with a consular protection, but long resident of Charleston, S. C.

Fleet Pierce, of Yeocomico, Va., employed as ferryman across the Potomac.

Persons and papers have been turned over to the provost-marshal of the military district.

Acting Master's Mate R. S. Sommers, who captured the boat, reports that Lord Hartington and Colonel Leslie had crossed the river in violation of the blockade. These persons, before they left the Virginia shore, were in company with Dr. Wilmer, who represented to me that his errand was to obtain medical advice and purchase religious books, and that the intention of the party was to give themselves up to one of the gunboats. The merits of the case will be decided by the military authorities, and therefore I deem it unnecessary to trouble the Department with further detail.

A mail was picked up on the beach, where it had been thrown, probably by Bayley, who appears from the correspondence to be the mail carrier. The letters teem with the usual falsehood and invective, but contain nothing of special importance.

I have the honor to be, with great respect, your obedient servant,

ANDW. A. HARWOOD,
Commodore, Commanding Potomac Flotilla.

Hon. GIDEON WELLES,
Secretary of the Navy, Navy Department.

[Enclosures.]

U. S. SCHOONER DAN SMITH,
Station F, Blake Creek, February 7, 1863.

SIR: I would most respectfully report that I ordered Acting Master's Mate R. S. Sommers last evening to reconnoiter. He left the vessel at 6 p. m. At 10 p. m. returned, reported having captured a boat with six men as they were landing from the Virginia shore, and that he brought the boat and prisoners on board, and also learned that Lord Hartington and Colonel Leslie have landed and were on their way to Washington. Enclosed I send the several statements made to me on examination, and also the amount of money found in their possession. I have ordered Acting Master's Mate R. S. Sommers to take charge of the prisoners and proceed to Washington and report to you for further orders.

Sir, I remain, very respectfully, your obedient servant,

BENJ. C. DEAN,
Acting Master, Commanding.

Commodore ANDREW A. HARWOOD,
Commanding Potomac Flotilla.

U. S. SCHOONER DAN SMITH,
Station F, Blake Creek, February 9, 1863.

SIR: I would most respectfully report that Acting Master's Mate William H. Hunt captured a boat with five men off Poplar Hill Creek, just as they had started from the Maryland shore about 300 yards

distant, bound to Virginia. Enclosed are their statements to me on examination, with the amount of money in their possession. I have ordered Acting Master's Mate William H. Hunt to take charge of the prisoners and proceed to Washington to report to you for further orders.

Hoping this may meet your approval, sir, I remain, very respectfully, your obedient servant,

BENJ. C. DEAN,
Acting Master, Commanding.

Commodore ANDREW A. HARWOOD,
Commanding Navy Yard, Washington, and Potomac Flotilla.

Report of Commodore Harwood, U. S. Navy, commanding Potomac Flotilla, transmitting documents relative to the capture, by U. S. S. Cœur de Lion, of schooner Emily Murray.

POTOMAC FLOTILLA,
COMMANDANT'S OFFICE, NAVY YARD,
Washington, February 11, 1863.

SIR: I enclose herewith a certificate containing particulars of the capture of the schooner *Emily Murray*, of Baltimore, by the U. S. S. *Cœur de Lion*, Acting Master Charles H. Brown. On comparing the manifest with the goods on board at the time of the capture, it was found that sundry bales, boxes, and barrels were missing.

Acting Master Brown was on his way up the river with his prize in tow when he learned, by examining the crew, that the missing part of the cargo had been landed in Virginia during the night. He returned to the neighborhood of Machodoc, and with the assistance of a boat's crew from the mortar schooner *Dan Smith*, recovered some of the goods corresponding to those on the manifest from a boat which was engaged in taking them across the creek, but which, being fired at, was run ashore.

The party made an unsuccessful search on the shore and adjacent buildings for the remainder of the goods.

I have the honor to be, with great respect, your obedient servant,

ANDW. A. HARWOOD,
Commodore, Commanding Potomac Flotilla.

Hon. GIDEON WELLES,
Secretary of the Navy, Navy Department.

[Enclosure.]

Potomac Flotilla.—Certificate of capture.

Name and character of the prize.—Schooner *Emily Murray*, of Baltimore; prisoners: J. F. Smith, J. F. Fink, Edward Robinson.

By whom and by what vessel capture made.—Acting Master Charles H. Brown; U. S. S. *Cœur de Lion.*

When capture made.—February 9, 1863.

Where and for what reasons.—Off Machodoc Creek; captured, as her manifest did not agree with the cargo, and suspicion of breaking the blockade.

The cargo, if any on board.—Lumber, sugar, whisky, and merchandise.

What papers found.—Manifest, license, enrollment, bills, and permit; three envelopes with various papers enclosed.

Remarks.—Three barrels of sugar and quantity of lumber unknown. Some of the goods brought by this vessel have also been captured this day by the *Cœur de Lion*, having been found in Virginia.

FEBRUARY 9, 1863.

I hereby certify that the above-mentioned schooner *Emily Murray* was captured by the undersigned, commanding the U. S. S. *Cœur de Lion*, of the Potomac Flotilla, at the time and place above designated, and that the above and annexed statement is true in every particular.

CHAS. H. BROWN,
Acting Master.

U. S. S. CŒUR DE LION, *February 9, 1863.*

SIR: I have the honor to report to you the capture of the schooner *Emily Murray*, of Baltimore, under the following circumstances: At 6 a. m. of this day, while lying near the Virginia shore opposite Currioman Creek, we saw this schooner lying at anchor about half a mile from the lower point of Machodoc Creek.

We steamed down to her, and on boarding I enquired of the captain why he was so near the Virginia shore.

He said he was in a sinking condition. I looked at his papers and found he had boxes, bales, and barrels on his manifest which were not on board, and of which he could give no account. I put a prize crew on board, took him in tow, and while proceeding to Blakistone Island, examined the crew of the schooner and found from their statements that the missing goods had been landed during the night. I therefore immediately ran down to the U. S. schooner *Dan Smith*, procured a boat and crew, and went over to search for the goods. As we were on our way across the river we saw a boat crossing Machodoc Creek; we fired a shot over her, whereupon the men turned the boat toward Windmill Point, ran her on a beach, and abandoned her. We went within about 100 yards of her and came to anchor. After bringing the boat alongside we found she contained goods with marks upon them corresponding to those on the manifest of the *Emily Murray*, and one of her crew identified them as the same which had been landed from that vessel. I sent the U. S. schooner *Dan Smith's* boat, in charge of Acting Ensign F. L. Harris, the cutter in charge of Acting Master's Mate C. E. Baldwin, and with my own gig, we proceeded to examine the shore and adjacent buildings. After an unsuccessful search we returned to the steamer, crossed the river, and leaving the *Dan Smith's* boat alongside that vessel, proceeded up to where we left the schooner *Emily Murray*, which we then towed to Blakistone Island anchorage. The U. S. schooners *Dan Smith* and *George Mangham* were in sight at the time of the capture of the *Emily Murray*.

The prisoners were: J. F. Smith, captain; John F. Fink, white boy; Edward Robinson, colored boy.

Respectfully, your most obedient servant,

CHAS. H. BROWN,
Acting Master, Commanding U. S. S. Cœur de Lion.

Commodore A. A. HARWOOD,
Commanding Potomac Flotilla.

Report of Commodore Harwood, U. S. Navy, commanding Potomac Flotilla, regarding prisoners.

POTOMAC FLOTILLA,
COMMANDANT'S OFFICE, NAVY YARD,
Washington, February 12, 1863.

SIR: I have to report the arrival of the *King Philip* with the goods and prisoners referred to in the enclosed certificate of capture.

I enclose also the statements of the prisoners in relation to their residences and property.

The prisoners and goods have been turned over to the military authorities and the money carefully secured until it can be determined whether it is to be returned to the persons upon whom it is found or where it is to be deposited.

I have the honor to be, with great respect, your obedient servant,

ANDW. A. HARWOOD,
Commodore, Commanding Potomac Flotilla.

Hon. GIDEON WELLES,
Secretary of the Navy.

[Enclosures.]

Potomac Flotilla.—Certificates of capture.

Name and character of the prize.—A boat of no value and without a name.

By whom and by what vessel capture made.—Captured by Acting Ensign F. L. Harris, of the U. S. schooner *Dan Smith.*

When capture made.—Captured February 9, 1863.

Where and for what reasons.—Crossing Machodoc Creek, Virginia.

The cargo, if any on board.—Two boxes marked ⟨P⟩, Washington, D. C.; 2 barrels marked ⟨P⟩, 1 barrel marked ⟨T⟩, 1 bale, mark erased.

What papers found.—None.

Remarks.—Saw the boat crossing the creek; Acting Master C. H. Brown, commanding U. S. S. *Cœur de Lion*, fired three shots; the boat was pulled ashore and abandoned by the crew.

—

Name and character of the prize.—A boat of no value, without a name.

By whom and by what vessel capture made.—Captured by Acting Master's Mate William H. Hunt, of the U. S. schooner *Dan Smith.*

When capture made.—Captured February 9, 1863.

Where and for what reasons.—Captured off Poplar Hill Creek, Potomac River, en route to Virginia.

The cargo, if any on board.—Five men, 2 trunks, 1 sack, 1 package, 2 sacks containing Testaments and religious works.

What papers found.—A few letters.

Remarks.—Discovered in Potomac River, en route to Virginia.

FEBRUARY 9, 1863.

I hereby certify that the above-mentioned merchandise was captured by the undersigned, commanding the U. S. schooner *Dan Smith*, of the Potomac Flotilla, at the time and place above designated, and that the above and annexed statement is true in every particular.

BENJ. C. DEAN.

U. S. SCHOONER DAN SMITH, POTOMAC FLOTILLA,
Station F, Blake Creek, February 9, 1863.

SIR: Below are the statements of the subjoined prisoners:

D. T. Chandler, a resident of Baltimore, Md., has a valise, saddle bag, two blankets, one india-rubber bag, $52.30 in U. S. Treasury notes, and $150 in gold.

D. T. CHANDLER.

—

S. F. Cameron, a resident of Alton, Cecil County, Md., has a few articles of medical stores for the Confederate Army, a trunk containing articles for persons residing in Virginia, and $542.70 in Confederate notes, and a set of horse equipments.

S. F. CAMERON,
C. S. Army.

—

John Carvelle, a resident of Washington, D. C., has a trunk and sack containing shoes; also a package of dry goods, a valise containing wearing apparel, and $213 in U. S. Treasury notes, three bonds on North Carolina, each valued at $200, payable in the Bank of the Republic of the city of New York.

JOHN CARVELLE.

—

W. D. Cassin, a resident of the District of Columbia, has a trunk and carpetbag containing clothing; also $207 in gold, $36 in U. S. Treasury notes, and $10 on a Southern bank.

W. D. CASSIN.

—

R. Rose, a resident of Richmond, Va., has a valise containing wearing apparel and two Spanish doubloons.

R. ROSE.

Report of Commodore Harwood, U. S. Navy, commanding Potomac Flotilla, transmitting certificate of capture.

POTOMAC FLOTILLA,
COMMANDANT'S OFFICE, NAVY YARD,
Washington, February 17, 1863.

SIR: I forward, for the information of the Department, a certificate of capture made by the U. S. schooner *George Mangham*, Acting Master John Collins, jr., commanding, on the 11th instant.

The prisoner, John Williams, has been placed in custody, and the prize goods stored at this yard.

I have the honor to be, with great respect, your obedient servant,

ANDW. A. HARWOOD,
Commodore, Commanding Potomac Flotilla.

Hon. GIDEON WELLES,
Secretary of the Navy, Navy Department.

Potomac Flotilla.—Certificate of capture.

Name and character of the prize.—Boat, no name; John Williams, prisoner.

By whom and by what vessel capture made.—Erick Gabrielson, acting master's mate.

When capture made.—February 11, 1863.

Where and for what reasons.—Potomac River; running the blockade.

The cargo, if any on board.—Four barrels whisky, 4 bags coffee, 3 boxes, 2 trunks, 2 horse collars, 18 plow points.

What papers found.—None.

Remarks.—The boat was captured when just landed on the Virginia shore, the occupants escaping, except one old man who gives his name as John Williams. They fired on the guard boat as she was pulling toward them, but were driven off by Mr. Gabrielson and crew, the grounding of his boat preventing him from capturing the entire party. The boat worthless and destroyed. The contents of the trunks and boxes unknown.

STATION F, POTOMAC FLOTILLA, *February, 12, 1863.*

I hereby certify that the above-mentioned prisoner and goods were captured by the undersigned, commanding the U. S. schooner *George Mangham*, of the Potomac Flotilla, at the time and place above designated, and that the above and annexed statement is true in every particular.

JOHN COLLINS, Jr.,
Acting Master, Commanding.

Report of Commodore Harwood, U. S. Navy, commanding Potomac Flotilla, regarding the seizure of schooner Mail.

POTOMAC FLOTILLA,
COMMANDANT'S OFFICE, NAVY YARD,
Washington, February 23, 1863.

SIR: On the 21st instant, on examining the cargo of the sutler schooner *Mail*, by Acting Master Van Boskirk, commanding the guard vessel at Alexandria, after she had been duly cleared and the cargo inspected by the custom-house, it was discovered that she had on board 428 dozen cans of an intoxicating drink resembling eggnog, entered on the manifest as milk, and the cans labeled "milk drink."

By the terms annexed to the manifest, signed by the deputy collector at Georgetown—

The said vessel and all her cargo are to be forfeited to the United States if any other goods are found on board of her than those specified in the manifest on the examination of the custom-house officers or the military or naval authorities after clearing for Belle Plain, Va.

I have therefore directed the vessel turned over to the district court.

I have the honor to be, with great respect, your obedient servant,

ANDW. A. HARWOOD,
Commodore, Commanding Potomac Flotilla.

Hon. GIDEON WELLES,
Secretary of the Navy.

Letter from Commodore Harwood, U. S. Navy, commanding Potomac Flotilla, to Brigadier-General Meigs, U. S. Army, regarding cargo of prize schooner Mail.

FEBRUARY 23, 1863.

GENERAL: The sutler schooner *Mail*, S. Raynor, master, regularly licensed, her cargo inspected and cleared by the custom-house authorities at Georgetown, was found on examination by the officer commanding the guard vessel at Alexandria to have on board of her 428 dozen cans of strong drink resembling eggnog, marked on the manifest "milk," and on the cans "milk drink."

The consignees hail, by a singular coincidence, from the State celebrated for its liquor law, viz: E. H. Garnsey, Sixth Maine Volunteers; A. W. Colamer, First Maine Volunteers; W. D. Haley, Nineteenth Maine Volunteers, jointly.

I send you a specimen of the "milk." The vessel has been seized and turned over to the district court.

I am, general, very respectfully, your obedient servant,

ANDREW A. HARWOOD,
Commodore, Commanding Potomac Flotilla.

Brigadier-General MONTGOMERY MEIGS, U. S. Army,
Quartermaster-General, Washington, D. C.

Letter from the collector of customs at Georgetown, D. C., to Commodore Harwood, U. S. Navy, commanding Potomac Flotilla, regarding the release of the schooner Mail.

CUSTOM-HOUSE,
Georgetown, D. C., March 5, 1863.

SIR: I am authorized by letter of the honorable Secretary of the Treasury, of the date of the 3d instant, to release the schooner *Mail* and her cargo and hand her over to the claimants, except the said 428 dozen cans of milk drink, which I am instructed to take possession of and cause to be condemned.

I have the honor to be, your obedient servant,

JUDSON MITCHELL,
Collector.

[Commodore A. A. HARWOOD, U. S. Navy,
Commanding Potomac Flotilla.]

Order of Commodore Harwood, U. S. Navy, commanding Potomac Flotilla, to Acting Master Frank, U. S. Navy, commanding U. S. S. Wyandank, in relation to a fraud attempted by schooner Mail.

FEBRUARY 23, 1863.

SIR: Be on the watch in passing licensed vessels with sutler's stores to ascertain that intoxicating drinks are not smuggled in cans entered as milk, oysters, or the like, on the manifest.

The sutler schooner *Mail*, regularly licensed and cleared for Belle Plain, had on board of her 428 dozen cans of strong drink resembling eggnog, marked on the manifest "milk" and on the cans "Milk drink, prepared by Numsen, Carroll & Co., No. 18 Light street, Baltimore." The fraud was detected by Acting Master Van Boskirk, commanding the guard vessel at Alexandria. By the terms annexed to the manifest, signed by the deputy collector at Georgetown, the said vessel and

all her cargo are to be forfeited to the United States if any other goods are found on board of her than those specified in the manifest, on examination by the custom-house officers or the military or the naval authorities after clearing for Belle Plain, Va.

You will seize and send to this yard all vessels you may detect in committing frauds of the kind.

You will observe that cans of the kind are not soldered in the usual way. The top and bottom are probably heated with some resinous substance and the edges bent over in order that the cover at either end can be easily removed to convert the can into a drinking cup.

Very respectfully, your obedient servant,

ANDREW A. HARWOOD,
Commodore, Commanding Potomac Flotilla.

Acting Master A. J. FRANK,
Commanding U. S. Guardship Wyandank, Piney Point.

Report of Lieutenant-Commander McCrea, U. S. Navy, commanding Second Division Potomac Flotilla, of the seizure of a schooner.

U. S. S. JACOB BELL,
Piney Point, February 24, 1863.

SIR: I send you sutler's vessel with "milk drink" on board, which, upon opening, proves to be a villainous eggnog. I consider her a lawful prize, according to instructions of 23d instant.

Very respectfully, your obedient servant,

E. P. MCCREA,
Lieutenant-Commander and Captain of the Fleet.

Commodore A. A. HARWOOD,
Commanding Potomac Flotilla.

Order of Commodore Harwood, U. S. Navy, commanding Potomac Flotilla, to Lieutenant-Commander McCrea, U. S. Navy, commanding Second Division, enjoining vigilance against frauds practiced by sutlers.

FEBRUARY 25, 1863.

SIR: In boarding vessels of all kinds a careful examination must be made to ascertain that the cargo agrees with the manifest, and especial attention to this point is required with regard to vessels laden with sutlers' supplies.

In the authority granted by the Navy Department to grant permits to sutlers, the following clause occurs, which you will please keep in view:

> The said vessel and all her cargo to be forfeited to the United States if any other goods are found on board than those specified in the manifest on examination by the custom-house officers, or by the military or naval authorities after clearance.

Frauds have been recently committed by sutlers by introducing intoxicating drinks in cans purporting to contain "milk drink" and entered on the manifest as milk, but really containing intoxicating drink. There is reason to suppose that spirits are also smuggled in oyster cans.

Boarding officers are to be instructed to be on the alert, and you will please cause the information contained in this letter to be communicated to all commanding officers of your division.

The boarding officer is to take possession of any sutler's vessel by which this fraud is attempted to be practiced. Boarding officers on any station within my command will invariably endorse upon the papers of vessels they board his name and the date of his examination, and enter it upon the log book and report without fail every such examination through their respective commanders to me.

You are required, as captain of the fleet, to ascertain that this order is thoroughly understood in both divisions of the flotilla.

Very respectfully, your obedient servant,

ANDREW A. HARWOOD,
Commodore, Commanding Potomac Flotilla.

Lieutenant-Commander EDWARD P. MCCREA,
Commanding Second Division.

[Same to Lieutenant-Commander Samuel Magaw, U. S. Navy, with the exception of the last paragraph.]

Report of Lieutenant-Commander Magaw, U. S. Navy, commmanding First Division Potomac Flotilla, of reconnoissance in Rappahannock River and engagement with Confederate battery near Fort Lowry, Va., February 21, 1863.

Semiofficial.] [U. S. S.] FREEBORN, *February 24, 1863.*

DEAR SIR: I have the honor to report that I have returned from a reconnoissance up the Rappahannock, and without finding the vessels referred to in the enclosed letters of General Hooker. I also enclose a copy of a note to him. I went about 6 miles above Tappahannock.

We, the *Freeborn* and *Dragon*, engaged a battery on Saturday (just below the old Fort Lowry, about 8 miles below Tappahannock) about an hour. One of the enemy's guns ceased firing after our tenth shot. The *Freeborn* was struck twice, but none of the crew injured. One of the shot has damaged some woodwork which we can not repair ourselves, and when I get through with some work here I will come to the yard for a day or two.

I must report that Acting Master's Mate F. H. Crandall behaved so well under fire (which was sharp) during our skirmish, that I wish him made an ensign. His application for an examination will follow this note.

The enemy are in considerable force as far down as Urbana.

General Lee was at Occupacia in person when we reached Tappahannock. The incidents of our expedition I will tell you when I come up.

Respectfully and faithfully, yours,

SAMUEL MAGAW,
Lieutenant-Commander.

Commodore ANDREW A. HARWOOD,
Comdg. Potomac Flotilla and Navy Yard, Washington, D. C.

[Enclosures.]

HEADQUARTERS ARMY OF THE POTOMAC,
February 15, 1863.

LIEUTENANT: The enclosed report was brought from the officer sent down the neck with an expedition toward Heathsville [Va.]: Major-General Hooker desires that you send to the point named down the

Rappahannock, and seize these vessels and all that are capable of carrying supplies or men across the Rappahannock, in the vicinity of Heathville or above.

If it is impossible to bring these vessels away with you, destroy them.

I am, very respectfully, yours, etc.,

DANIEL BUTTERFIELD,
Major-General and Chief of Staff.

Lieutenant-Commander MORGAN [MAGAW],
Potomac Flotilla.

P. S.—These vessels are supposed to be pungy schooners. Heathsville is supposed to be their depot of supplies.

U. S. S. FREEBORN,
Potomac Flotilla, February 24, 1863.

GENERAL: In compliance with your request of the 15th instant, I made an examination of the Rappahannock Creek with the *Freeborn* and *Dragon*, and found no pungies or scows. Other creeks were examined, but without success.

The enemy have a battery about a mile below Lowry's Point, which we engaged.

I have the honor to be, very respectfully, yours,

SAMUEL MAGAW,
Lieutenant-Commander, etc.

Major-General JOSEPH HOOKER, U. S. Army,
Commanding Army of the Potomac.

Order of Commodore Harwood, U. S. Navy, commanding Potomac Flotilla, to Lieutenant-Commander Magaw, U. S. Navy, commanding First Division, enjoining a vigilant watch on sutlers' vessels.

FEBRUARY 27, 1863.

SIR: I have received your letter of the 24th instant, with its enclosures, relating to your expedition to the Rappahannock.

I approve of the prompt manner in which you complied with the wishes of the general commanding, and am pleased that none of our brave fellows were hurt.

I have reported the result of your search to the Department, and mentioned Mr. Crandall's name. His examination will be ordered, no doubt, as soon as he applies for it.

Lieutenant-Commander McCrea reports that, owing to the occupation of the peninsula by our troops, the contraband trade is for the present checked. Still, I wish the vigilance to be kept up. A sharp eye must be kept on the sutlers by the boarding officers for liquor smuggled in cans under guise of milk, etc. I enclose you a form for permit issued by the Quartermaster-General.

Hereafter all prizes will be sent to the foot of Sixth street wharf, in charge of an officer and prize crew, instead of the navy yard.

Very respectfully, your obedient servant,

ANDREW A. HARWOOD,
Commodore, Commanding Potomac Flotilla.

Lieutenant-Commander SAMUEL MAGAW,
Commanding First Division Potomac Flotilla.

Order of Commodore Harwood, U. S. Navy, commanding Potomac Flotilla, to Lieutenant-Commander Magaw, U. S. Navy, commanding First Division, regarding overhauling of sutlers' vessels.

FEBRUARY 25, 1863.

SIR: I have been incidentally informed that you had gone round to the Rappahannock River. In every material movement you are expected to give me due notice by telegraph or a messenger by one of the steamers under your command.

In case, for purposes of cooperation with the Army, your movements are directed by the request of the commanding general and will not admit of delay, the information should be communicated through a safe channel as soon as possible, in order that I may regulate supplies and give such instructions as the nature of the case may demand.

Your attention is especially called to the letter in reference to frauds committed by sutlers.

Their vessels are not to be permitted to pass by a mere clearance, but may be overhauled at any time or place within the limits of my command, and particularly when there is reason to suspect fraud, as at the present time. I doubt whether there are any volunteer sutlers' vessels at this time in which liquor is not smuggled.

We have seized two already at Alexandria, which had cleared the custom-house.

Very respectfully, your obedient servant,

ANDREW A. HARWOOD,
Commodore, Commanding Potomac Flotilla.

Lieutenant-Commander SAMUEL MAGAW,
Commanding First Division Potomac Flotilla.

Report of Commodore Harwood, U. S. Navy, commanding Potomac Flotilla, of the seizure of schooner Kate.

POTOMAC FLOTILLA,
COMMANDANT'S OFFICE, NAVY YARD,
Washington, February 25, 1863.

SIR: I have to report to the Department that the sutler schooner *Kate* has been seized and turned over to the prize commissioners for a discrepancy between the cargo and the manifest similar to the case of the schooner *Mail*, reported to the Department in my letter No. 71, of 23d instant.

I have the honor to be, with great respect, your obedient servant,

ANDW. A. HARWOOD,
Commodore, Commanding Potomac Flotilla.

Hon. GIDEON WELLES,
Secretary of the Navy, Navy Department.

Report of Commodore Harwood, U. S. Navy, commanding Potomac Flotilla, of the seizure of schooner Thomas C. Worrell.

FEBRUARY 26, 1863.

SIR: I have to report that another sutlers' vessel, the *Thomas J.* [*C.*] *Worrell*, from Baltimore to Belle Plain, has been seized by my order, brought to this port, and delivered to the district court.

The schooner contained a large quantity of intoxicating drink, entered on the manifest as "milk," in violation of the act of Congress and the rules of the War Department relating to sutlers.

I enclose herewith a certificate of capture.

I have the honor to be, with great respect, your obedient servant,

ANDREW A. HARWOOD,
Commodore, Commanding Potomac Flotilla.

Hon. GIDEON WELLES,
Secretary of the Navy.

Report of Commodore Harwood, U. S. Navy, commanding Potomac Flotilla, of the seizure of schooner Chatham.

POTOMAC FLOTILLA,
COMMANDANT'S OFFICE, NAVY YARD,
Washington, February 28, 1863.

SIR: I have to report the seizure yesterday morning of the sutler schooner *Chatham* by the guard vessel at Alexandria, Va., for having goods on board not allowed in the schedule issued by the War Department.

I have the honor to be, with great respect, your obedient servant,

ANDW. A. HARWOOD,
Commodore, Commanding Potomac Flotilla.

Hon. GIDEON WELLES,
Secretary of the Navy, Navy Department.

Report of Commodore Harwood, U. S. Navy, commanding Potomac Flotilla, of the seizure of the schooners Vista and A. W. Thompson, and transmitting certificates of capture.

POTOMAC FLOTILLA,
COMMANDANT'S OFFICE, NAVY YARD,
Washington, March 2, 1863.

SIR: I enclose for the information of the Department certificate of capture of the sutler schooner *Vista;* also one of the schooner *A. W. Thompson*, made by the U. S. S. *Wyandank*, Acting Master A. J. Frank, on the 28th ultimo.

The vessels and persons named therein have been turned over to the prize commissioners.

I have the honor to be, with great respect, your obedient servant,

ANDW. A. HARWOOD,
Commodore, Commanding Potomac Flotilla.

Hon. GIDEON WELLES,
Secretary of the Navy, Navy Department.

[Enclosures.]

Potomac Flotilla.—Certificate of capture.

Name and character of prize.—Schooner *Vista.*
By whom and by what vessel capture made.—*Wyandank.*
When capture made.—February 28 [1863].

Where and for what reason.—Piney Point, per commodore's orders, for having goods on board not specified in the manifest.

The cargo, if any on board.—Sutlers' stores.

What papers found.—Voucher No. 1.

Remarks.—Solomon F. Kirwin, captain; John Hubbard, mate; Isaac Cornish, colored; Henry Kune, colored, G. May, sutler; J. Valentine, sutler; J. Metzler, sutler; J. Numsen, sutler.

FEBRUARY 28, 1863.

I hereby certify that the above-mentioned schooner was captured by the undersigned, commanding the U. S. S. *Wyandank*, of the Potomac Flotilla, at the time and place above designated, and that the above and annexed statement is true in every particular.

A. J. FRANK,
Acting Master, Commanding.

Potomac Flotilla.—Certificate of capture.

Name and character of the prize.—Schooner *A. W. Thompson.*

By whom and by what vessel capture made.—*Wyandank.*

When capture made.—February 28 [1863].

Where and for what reason.—Piney Point, per commodore's orders, for having goods on board not specified in the manifest.

The cargo, if any on board.—Sutlers' stores.

What papers found.—Voucher No. 1.

Remarks.—G. T. Lee, mate, acting as captain; J. Weever, colored seaman; boy Charles, colored seaman; J. Paul Jones, sutler; Wesley J. Phillips, clerk; H. Bennett, clerk; Samuel Preston, servant, D. H. Williams, in the employ of J. Brickman.

FEBRUARY 28, 1863.

I hereby certify that the above-mentioned schooner, called the *A. W. Thompson*, was captured by the undersigned, commanding the U. S. S. *Wyandank*, of the Potomac Flotilla, at the time and place above designated, and that the above and annexed statement is true in every particular.

A. J. FRANK,
Acting Master, Commanding.

Order of Commodore Harwood, U. S. Navy, commanding the Potomac Flotilla, to Acting Master Street, U. S. Navy, commanding U. S. S. Primrose, to proceed to duty in the First Division.

COMMANDANT'S OFFICE, NAVY YARD,
Washington, March 7, 1863.

SIR: Proceed without delay with the U. S. S. *Primrose* to Aquia Creek, ascertain where Lieutenant-Commander Magaw is to be found, and report the *Primrose* as ready for service in the First Division of the Potomac Flotilla.

Respectfully, your obedient servant,

ANDREW A. HARWOOD,
Commodore, Commanding Potomac Flotilla.

Acting Master WM. T. STREET,
Commanding U. S. S. Primrose.

Report of Commodore Harwood, U. S. Navy, commanding Potomac Flotilla, transmitting certificates of capture.

POTOMAC FLOTILLA,
Navy Yard, Washington, March 10, 1863.

SIR: I forward herewith the certificate of the capture of a small sloop by the *Eureka*, and also of John C. Faber, Thomas R. Jones, John S. Wilson, and one contraband, who were taken under circumstances described in the certificate by Acting Master Alvin Phinney, commanding the U. S. schooner *Racer*.

Wilson and Jones have declared themselves to be Confederate soldiers.

The sloop and crew taken by the *Eureka* have been turned over to the district court, the men captured by Mr. Phinney to the military authorities. The packages purporting to contain the sums in gold and bills have been secured by me until I shall have received a decision as to the proper disposition of them, the only course left for me to take since the notice given me by the district attorney that money taken under the circumstances described in the certificate of capture (enclosure 2) does not come within the jurisdiction of the admiralty court.

I have the honor to be, with great respect, your obedient servant,

ANDW. A. HARWOOD,
Commodore, Commanding Potomac Flotilla.

Hon. GIDEON WELLES,
Secretary of the Navy, Navy Department.

[Enclosures.]

Potomac Flotilla.—Certificate of capture.

Name and character of the prize.—Sloop; no name; two prisoners, named David Smoot and Charles Posey.

By whom and by what vessel capture made.—J. B. Fairchild, acting master's mate; U. S. S. *Eureka*.

When capture made.—March 7, 1863.

Where and for what reasons.—On the Virginia shore of the Potomac River; attempting to smuggle whisky into Virginia.

The cargo, if any on board.—Three barrels of whisky.

What papers found.—None.

Remarks.—As I was standing down the Potomac River and off Wicomico River I discovered a sloop standing in for the Virginia shore. Before I overhauled her the prisoners, David Smoot and Charles H. Posey, hove overboard 3 barrels of whisky. They acknowledged the fact of attempting to run the blockade for the purpose herein stated.

U. S. S. EUREKA, *March 7, 1863.*

I hereby certify that the above-mentioned prisoners, sloop, and cargo were captured by the undersigned, commanding the U. S. S. *Eureka*, of the Potomac Flotilla, at the time and place above designated, and that the above and annexed statement is true in every particular.

J. B. FAIRCHILD,
Acting Master's Mate, Commanding.

Potomac Flotilla.—Certificate of capture.

Name and character of prize.—One rowboat, small yawl—no names—containing the following persons: John C. Faber, Thomas R. Jones, John S. Wilson, one contraband.

By whom and by what vessel capture made.—Alvin Phinney, acting master, commanding U. S. schooner *Racer*.

When capture made.—March 6, 1863.

Where and for what reasons.—In mouth of Breton's Bay; for attempting to run the blockade.

What papers found.—One draft, $650, on Messrs. Frick & Ball, Baltimore, Md., payable at sight to Augustus McLaughlin; signed William Frick, jr., dated Columbus, Ga., January 21, 1863. One draft, $200, on John Cushing, esq., in favor of Robert Hough, signed John Cushing, jr., dated Richmond, February 18, 1863. One draft, $300, on John S. Gidding & Co., in favor of herself, and signed by Fanny McBlair, dated Charlotte, N. C., February 18, 1863.

Remarks.—These persons refused to stop when hailed and ran their boat on shore and attempted to escape by running, but were taken a short distance from the boat. Upon being searched, there were found upon John C. Faber the three drafts before mentioned, also $241 in bank notes, mostly Virginia money. Upon Thomas R. Jones $1,000 in gold. The boat being worthless was destroyed.

I hereby certify that the above-mentioned prisoners were captured by the undersigned, commanding the U. S. mortar schooner *Racer*, of the Potomac Flotilla, at the time and place above designated, and that the above and annexed statement is true in every particular.

ALVIN PHINNEY,
Acting Master, Commanding U. S. Schooner Racer.

[Endorsement.]

Acting Master Phinney states in a letter under date March 7:

In arranging the papers for sending, Mr. Whitmore mislaid one of the drafts, the one for $200, and it can not be found at present, but when it is found I will forward it.

ANDREW A. HARWOOD,
Commodore.

Letter from the Assistant Secretary of the Navy to Commodore Harwood, U. S. Navy, commanding Potomac Flotilla, transmitting regulations for fishing in the Potomac River.

NAVY DEPARTMENT, *March 13, 1863.*

SIR: I enclose herewith a copy of a letter received from Brigadier-General J. H. Martindale, military governor of the District, transmitting a printed copy of "Regulations for fishing in the Potomac River."

You will recognize, countersign, and register the permits issued by General Martindale, and allow the parties mentioned in each to fish within the limits prescribed in the license, subject to the regulations and conditions.

Very respectfully,

G. V. FOX,
Assistant Secretary of Navy

Commodore A. A. HARWOOD,
Commandant Washington Navy Yard.

[Enclosure.]

Regulations for fishing in the Potomac River.

Permits will be granted to persons applying to catch fish in the Potomac River during the present season upon the following conditions:

First. The applicant must be a loyal citizen of the United States; to be accredited in writing, by some citizen of known loyalty, as a loyal person. Applications for fishing permits must be made in writing, signed by the applicant; must specify his place of residence and occupation, and designate the place and limits within which the fishing license is to extend.

Second. Persons who design to cure fish must also specify in their application the place where the fish is to be cured, the quantity to be cured, and the quantity of salt to be used in the operation; and salt permits will be granted at the discretion of the military governor for curing fish, only on the Maryland shore.

Third. He shall take the oath of allegiance. He shall not take salt, spirituous liquors, or any munitions of war on to the Virginia shore; nor any articles whatever, except provisions for himself and the men employed by him, and the boat's tackle and implements necessary for fishing.

Fourth. He shall not permit any person whatever, except the men employed by him, to pass the river in any boat under his control; nor in any manner aid communications between the Virginia and Maryland shores.

Fifth. He shall employ no person to assist him except of known loyalty to the Government of the United States. The names of all persons employed by him shall, before entering on their employment, be registered in the office of the military governor, and be approved by him. They shall also be furnished with permits to assist the applicant as fishermen.

Sixth. Before commencing to fish under this permit below Georgetown, he shall report to the commodore commanding the Potomac Flotilla, in order that this permit may be countersigned by him and registered. He will be under the surveillance of the naval force on duty on the Potomac River.

Seventh. He shall execute a bond, with reasonable surety, in the penal sum of not less than $1,000, conditioned that there shall be no violation of the terms or spirit of the permit granted to him. Such bond shall be approved by the military governor of Washington and filed in his office.

Eighth. Any departure from the limits prescribed in the license, or any violation of the foregoing terms, will subject the party to forfeiture of his bond and license, and his boats and tackles to seizure, and also himself to such fine and punishment, by imprisonment, as may be imposed by a military commission.

Report of Lieutenant-Commander Magaw, U. S. Navy, commanding First Division Potomac Flotilla, regarding condition of the U. S. S. Dragon and insufficiency of force of his command.

Semiofficial.] U. S. S. FREEBORN,
Potomac Flotilla, March 14, 1863.

DEAR SIR: The *Dragon* has broken down and is at Alexandria. I have not the officers to investigate the case, so I wish you would do so

I was at headquarters yesterday. There can be no immediate move, the roads are so bad.

Captain McCrea told me he would give me thirty of sixty-five men we required for the flotilla. I have not seen them, and some of my division are short-handed.

Very faithfully, your obedient servant,

SAMUEL MAGAW,
Lieutenant-Commander.

Commodore ANDREW A. HARWOOD,
Commanding Potomac Flotilla and Navy Yard, Washington.

Report of Commodore Harwood, U. S. Navy, commanding Potomac Flotilla, transmitting certificate of capture.

POTOMAC FLOTILLA,
Navy Yard, Washington, D. C., March 18, 1863.

SIR: I transmit for the information of the Department a certificate of capture made by the U. S. S. *Cœur de Lion* on the 13th instant.

The merchandise is now at this yard, and the prisoner, George Chapelear, is in custody of the provost-marshal of the military district of Washington.

I have also to report for the information of the Department the capture of six persons by the U. S. S. *Racer*, in an attempt to run the blockade on the 14th instant. On the person of W. L. Dent, one of the prisoners, was found three drafts on persons in Washington and New York, amounting to $1,519.

In addition to the above was found on the person of Jacob Silner one $500 North Carolina State bond, and on the person of Abm. Hunchbeck a sum purporting to amount to $161 in money.

These men with two colored persons were in the boat and picked up off Wicomico River by the U. S. S. *Wyandank*, of the flotilla.

Several refugees, said to be from Virginia, were also brought up by the *Wyandank*, and have been placed in the custody of the provost-marshal.

I have the honor to be, with great respect, your obedient servant,

[ANDW. A. HARWOOD,]
Commodore, Commanding Potomac Flotilla.

Hon. GIDEON WELLES,
Secretary of the Navy, Navy Department.

[Enclosure.]

Potomac Flotilla.—Certificate of capture.

Name and character of the prize.—One canoe, no name; one prisoner, George Chapelear.

By whom and by what vessel capture made.—Acting Master Charles H. Brown, U. S. S. *Cœur de Lion.*

When capture made.—March 13, 1863.

Where and for what reasons.—Caught running the blockade.

The cargo, if any on board.—Assorted goods in trunks, boxes, and bale.

What papers found.—None.

Remarks.—At 9:30 a. m., while lying at anchor in Blakistone Island Harbor, saw a canoe come out of Shank's Island Creek, standing over toward Virginia. Got underway and stood toward her, firing as we

caught sight of her between the snow squalls. At length we succeeded in driving her ashore and captured the goods and one of the persons; the others (four in number) escaped. It blowing very strong and a heavy sea running, the goods were much damaged before they were received on board. The cargo consisted of 2 trunks, dry goods, and fancy articles; 3 boxes, contents unknown; 1 bale shoe thread; 1 leather valise of needles, etc.; 1 bag, containing dry goods; 1 empty carpetbag. All the above much damaged by water.

BLAKISTONE ISLAND ANCHORAGE, *March 13, 1863.*

I hereby certify that the above-mentioned canoe, prisoner, and merchandise were captured by the undersigned, commanding the U. S. S. *Cœur de Lion*, of the Potomac Flotilla, at the time and place above designated, and that the above and annexed statement is true in every particular.

CHAS. H. BROWN,
Acting Master, Commanding.

Report of Acting Master Street, U. S. Navy, commanding U. S. S. Primrose, requesting permission to reconnoiter certain creeks of the Potomac River.

U. S. S. PRIMROSE,
Off Aquia Creek, March 20, 1863.

SIR: Believing there is an avenue yet open at Pope's, Mattox, and Monroe's creeks, Virginia (which are but 2 miles apart), from Wicomico River, Maryland, to run the blockade, I would respectfully ask permission to proceed thither with a small force (say two vessels besides the *Primrose*) to make a reconnoissance of the above creeks for the purpose of ascertaining if there are any boats or persons up the same that still carry on the contraband trade.

This point is entirely unguarded, both by troops on the Maryland shore or the flotilla, nor has there ever been, to my knowledge, any expedition made up either of these creeks by vessels or boats of the flotilla, and from my personal knowledge of the above places, they have been and still are the main avenues of trade to Virginia.

Hoping that I am acting in accordance with duty in making the above application,

I am, very respectfully, your obedient servant,

WILLIAM T. STREET,
Acting Master, Commanding.

Lieutenant-Commander SAMUEL MAGAW,
Commanding First Division Potomac Flotilla.

Order of Lieutenant-Commander Magaw, U. S. Navy, commanding First Division Potomac Flotilla, to Acting Master Street, U. S. Navy, commanding U. S. S. Primrose, regarding the examination of creeks entering the Potomac River.

U. S. S. FREEBORN, *March 21, 1863.*

SIR: You will make such an examination of Upper Machodoc, Monroe's, Mattox, and Pope's creeks, Virginia (and Rosier's), as you deem safe, with the following force, viz, the *Primrose*, *Teaser*, and ten men (volunteers), from the *Freeborn* or *Yankee*.

Care must be taken against surprise or an attack upon pickets or scouts that may be our own.

The object you will keep in mind is the seizure of such boats and arrest of such men as may still be engaged in the contraband trade. You must guard against your men straggling or foraging.

Mr. Rollins, captain's clerk, will accompany you as guide.

Yours, faithfully,

SAMUEL MAGAW,
Lieutenant-Commander.

Acting Master STREET, U. S. Navy,
Commanding Primrose, First Division.

Report of Acting Master Street, U. S. Navy, commanding U. S. S. Primrose, of examination of Pope's Creek, Virginia, and capture of two boats at Great Meadows, Va.

U. S. S. PRIMROSE,
Potomac Flotilla, March 24, 1863.

SIR: In obedience to your orders of the 21st instant, I this morning proceeded to Pope's Creek, Virginia, in company with the U. S. S. *Teaser*, and landed at the mouth of the creek, but finding there was not water enough to admit the passage of my boats, I walked up the shore a distance of 2 miles. I found nothing but a small seine boat and seine. I then left the creek and went to the residence of Mr. John Critcher. I found no one there but colored persons, from one of whom I gained information that there were a number of boats below at a place known as the Great Meadows. I immediately returned to my vessel, got underway and steamed down the river, accompanied by the U. S. S. *Teaser*, to the above-named place, where, upon landing, I found a boat that had been used to run the blockade. I sent Captain [Philip] Sheridan and crew up a ravine, in which, about 200 yards, they found a large canoe concealed in the bushes that had evidently been used for the same purpose. Further search was made, but found no other boats. Had it not been storming I think it very probable we would have during the night arrested the parties engaged in running the blockade, as I was informed they lived only a short distance from the landing. Both the boats I brought away, and will deliver them to you.

Very respectfully, your obedient servant,

WILLIAM T. STREET,
Acting Master, Commanding.

Lieutenant-Commander SAMUEL MAGAW,
Commanding First Division Potomac Flotilla.

Weekly report of Lieutenant-Commander Magaw, U. S. Navy, commanding First Division Potomac Flotilla.

U. S. S. YANKEE, *March 24, 1863.*

SIR: I have the honor to report the position of the vessels of the First Division during the past week and at present:

Station A.—Mortar schooner *A. Hugel.*

Station B.—Mortar schooner *Daniel Smith* and steamer *Resolute.*

Station C.—Steamers *Yankee* and *Freeborn.*

Station D.—Mortar schooner *Sophronia* and steamers *Primrose* and *Teaser.*

The *Dragon* is employed as a dispatch vessel and remains at Aquia Creek when I am absent.

Nothing worthy of note has occurred. The *Primrose* and *Teaser* are examining the creeks on the Virginia side on Station D, and have destroyed some boats on suspicion of their having been used in crossing the river.

The *Freeborn* brought up from the lower or Second Division some refugees. I suspected some of them of carrying mails and turned them over to the provost-marshal at this place. We will send them to Washington after due examination.

Very respectfully, your obedient servant,

SAMUEL MAGAW,
Lieutenant-Commander.

Commodore A. A. HARWOOD, etc.

Report of Commodore Harwood, U. S. Navy, commanding Potomac Flotilla, transmitting report regarding seizure of schooner E. Waterman by U. S. S. Reliance.

POTOMAC FLOTILLA,
COMMANDANT'S OFFICE, NAVY YARD,
Washington, D. C., March 24, 1863.

SIR: On Friday, the 20th instant, the schooner *E. Waterman* was seized and sent up to this yard by Acting Master W. P. Dockray, of the U. S. S. *Reliance.* She was found at St. Mary's River without custom-house papers of any kind.

The papers in possession of her master at the time of her seizure show that she had been employed by the Army for the purpose of carrying freight.

Among them are two orders, one of them in lead pencil from Captain and Assistant Quartermaster J. G. Johnson, both expressed in the following terms:

ASSISTANT QUARTERMASTER'S OFFICE,
Aquia Creek, Va., March —, 1863.

SIR: You will at once proceed to Baltimore and upon your arrival report to W.

The CAPTAIN OF THE SCHOONER WATERMAN.

The Department will observe that the *Waterman* was picked up, not on her way to Baltimore, but in St. Mary's River, the proper locality for taking on board contraband goods to the opposite shore at Wicomico.

The schooner had no cargo on board, and judging from antecedent decisions, no intentional violation of law will be found against her; but I must protest against vessels employed by the land forces having so much license to move within the region of blockade by the authority only of an order from an assistant quartermaster.

The *E. Waterman* must formerly have had a clearance from the custom house at Baltimore, as she had a Potomac pass in December last to bring up a cargo of oats, which she could not have obtained without the clearance.

I would enquire whether it is regular for freight vessels employed by the Quartermaster's Department to sail without the usual license from the custom-house; if so, I am of opinion it will lead to great abuse.

I have the honor to be, with great respect, your obedient servant,

ANDW. A. HARWOOD,
Commodore, Commanding Potomac Flotilla.

Hon. GIDEON WELLES,
Secretary of the Navy.

[Enclosure.]

U. S. S. RELIANCE,
St. Mary's, March 20, 1863.

SIR: The schooner *E. Waterman*, which I this day seized and have sent to the yard in charge of Acting Ensign Walters, is as clear a case of violation of the revenue laws as has ever come under my observation, as she has neither register, license, nor enrollment; and how she passed all the gun and mortar boats with the guard vessels at Piney Point on the papers I have forwarded to you is beyond my comprehension, coming as she did from Aquia Creek. She is a fine schooner and valued by her owner at $10,000. She has no cargo.

I am, very respectfully, your obedient servant,

W. P. DOCKRAY,
Acting Master, Commanding.

Commodore ANDW. A. HARWOOD,
Commanding Potomac Flotilla, Washington Navy Yard.

Report of Commodore Harwood, U. S. Navy, commanding Potomac Flotilla, regarding regulations governing fisheries in the Potomac River.

POTOMAC FLOTILLA,
COMMANDANT'S OFFICE, NAVY YARD,
Washington, March 25, 1863.

SIR: Lieutenant-Commander Magaw has written to me that not being aware of the new regulations of the War Department governing the fisheries of the Potomac, he had given permission to several persons to fish under the terms agreed upon between him and General Hooker when the latter commanded at Budd's Ferry last year, namely, "certain channel limits, and if caught or reported for using their boats for any other purpose, the boats were to be broken up, the nets confiscated, and the parties turned over to the provost-marshal." Lieutenant-Commander Magaw observes that some men who depend upon fishing for a living, and operate upon a very small scale, can not give the bond required. He has been informed that a Baltimorean by the name of Cunningham is about to fish at Budd's Ferry on a larger scale than the poorer class of fishermen can afford to do, and yet his securities and license amount to the same as those who only work one gill net.

It seems to me right that, while due care is taken that fishing and nothing else should be the occupation of the parties, the poorer class of fishermen should be the favored one, if any distinction be made at all.

Lieutenant-Commander Magaw represents furthermore that the Maryland shore is now pretty thoroughly picketed and that the pickets had commenced taking boats from all parties without cause that he could see. He was about having an interview with the colonel commanding at Liverpool Point upon the subject.

I have sent to Brigadier-General Martindale a copy of that part of Lieutenant-Commander Magaw's letter relating to the fisheries.

I have the honor to be, with great respect, your obedient servant,

ANDW. A. HARWOOD,
Commodore, Commanding Potomac Flotilla.

Hon. GIDEON WELLES,
Secretary of the Navy.

Report of Lieutenant-Commander McCrea, U. S. Navy, commanding Second Division Potomac Flotilla, regarding disposition of vessels.

U. S. S. KING PHILIP,
Potomac Flotilla, March 26, 1863.

SIR: In obedience to your order I have visited the several stations of the Potomac Flotilla under my command, and would report that the *Wyandank* has been relieved by the mortar schooner *Racer* as guard vessel, and the first named has been sent to her former station in Wicomico River.

My command is considerably weakened by the absence of the *Jacob Bell*, *Satellite*, and *Wyandank*, also by the *Eureka* not being serviceable in parts of the river about Piney Point, owing to heavy winds and seas.

The light duties of the upper division I would suggest could easily dispense with two vessels, say *Primrose* and *Dragon*, their armament being sufficiently heavy to join any expedition or cooperative force up the Rappahannock, and furthermore, the guard vessel at Piney Point being a sailing craft requires a steamer within signal distance to prevent vessels violating the pass regulations. Again a necessity of more force is occasioned by transports landing troops on the Virginia and Maryland shores and wantonly destroying property and otherwise maltreating the inhabitants. The upper division is guarding a section where our own troops are, while this is entirely under the control of the naval force of this division.

Very respectfully, your obedient servant,

E. P. MCCREA,
Lieutenant-Commander and Captain of the Fleet,
Commanding Second Division Potomac Flotilla.

Commodore A. A. HARWOOD,
Commanding Potomac Flotilla, Washington Navy Yard.

P. S.—Since writing the above the U. S. S. *Jacob Bell* has arrived on her station; she is but a light addition under the circumstances.

E. P. MCCREA.

General instructions of Commodore Harwood, U. S. Navy, commanding Potomac Flotilla, to Lieutenant-Commander Magaw, U. S. Navy, commanding First Division.

MARCH 26, 1863.

SIR: Your letters of the 20th, 22d, and 23d instant have been received.

With reference to the *Dragon*, it appears that the information I received that she had been injured in pulling the *Primrose* off was incorrect.

Please to send regularly a weekly report from all the vessels in your division, and cause such enquiries to be made in all cases requiring notice that I may be kept informed of the condition of the flotilla. If nothing of moment occurs, let me know at least exactly where each vessel is stationed.

As your command extends to Alexandria, I wish you to see that a proper lookout is kept for all the points on the Virginia shore where there is a probability of the contraband trade being carried on. There are many persons who have passes for transporting manure, wood, etc., which should be looked after.

I have sent an extract of your unofficial note to Brigadier-General Martindale.

I have also sent a copy of that part of the letter which relates to the fisheries to the Department. The arrangement as it now stands does not appear to me just, and I am in hopes of having some modification established in favor of the poorer class of fishermen.

I send you a copy * of the regulations established by the War Department, with the approbation of the Secretary of the Navy. You will see that by article 6 all fishermen are under the surveillance of the flotilla.

I enclose you a general order from the Department relative to passengers and others, which you will be careful to communicate to all commanding officers in your division.

Very respectfully, your obedient servant,

ANDREW A. HARWOOD,
Commodore, Commanding Potomac Flotilla.

Lieutenant-Commander SAMUEL MAGAW,
Commanding First Division Potomac Flotilla.

Report of Acting Master Street, U. S. Navy, commanding U. S. S. Primrose, regarding expedition to Rosier's Creek, Virginia.

U. S. S. PRIMROSE,
Station D, Potomac Flotilla, March 27, 1863.

SIR: I yesterday made an expedition to Rosier's Creek, Virginia, in company with the U. S. S. *Teaser*. I arrived off the creek at 12 m., and made all arrangements to land with safety, as we were about 10 miles beyond the picket lines of our Army, and as I had seen Confederate cavalry in the vicinity but a few days before. I first landed at the farm on Bluff Point, for the purpose of ascertaining if it were safe to proceed up the creek with our boats. Upon landing I found that there had been no rebel cavalry seen for a few days past. I therefore ordered Captain Shirk, with his two boats—one under his own charge, the other under the charge of Master's Mate [Charles] Case—to proceed up the creek, followed by two boats from this vessel under the charge of Master's Mate Jacob Hahn, while Mr. Rollins (our guide), Mr. [L. B.] Leland, second assistant engineer, and myself, with a small force, walked around the shore, keeping abreast of the boats. We went up the creek to its head and found two boats, one of which was destroyed, the other brought away, which, with your permission, I will keep for the use of the flotilla. We did not meet any resistance, nor did we see any cavalry. I visited several farmhouses and found all the inhabitants

* See p. 242.

strong advocates of secession. There are, however, very few men left in this section of the country, which looks in a most desolate condition, the poor people having scarcely the necessaries of life. I would most respectfully call your attention thereto. I learned also that there are but few scouts or guerrillas in the northern neck, and from Westmoreland Court-House west a force can be landed from the gunboats with safety, but below that point cavalry cross from the Rappahannock nightly. There is very little crossing on the Potomac at present except by Jews, aided by men back in the forest, and whom I can not get, as these expeditions are made in the daytime, when they take to the woods.

I have two more expeditions to make, viz, Mattox and Upper Machodoc creeks, and when they are completed there will be no more crossing between Mathias Point and Nomini Cliffs, as I will then have all the boats destroyed, both on land and in the water.

I find that our guide, Mr. Louis N. Rollins, is thoroughly acquainted with the country, and with his aid am enabled to carry out the intention of these expeditions with dispatch.

I have the honor to be, your most obedient servant,

W. TELL STREET,
Acting Master, Commanding.

Lieutenant-Commander SAMUEL MAGAW,
Commanding First Division Potomac Flotilla.

Report of Commodore Harwood, U. S. Navy, commanding Potomac Flotilla, regarding arrest of contrabandists.

POTOMAC FLOTILLA,
Navy Yard, Washington, April 6, 1863.

SIR: Acting Master W. T. Street arrested two persons, named Bowlin Curley and James Sutton, living on Bluff Point, Virginia, and engaged in supplying the rebels with goods.

On the 27th ultimo Curley attempted to haul certain supplies across the peninsula to the Rappahannock, but was intercepted by our cavalry, who captured the vehicle and goods, but Curley escaped.

The goods in question were secreted in Sutton's house at Bluff Point (below Mathias). The men above named have been actively engaged in contraband operations, for which the locality (the narrowest part of the peninsula nearly opposite to Port Royal) gives them the best facilities.

Persons of this character have been before arrested and after a short confinement released, which should not be the case unless ample security is given that they will not return to their old business, as they materially aid in keeping up the supplies, which are, like money, the sinews of war.

I have placed these men in the custody of the provost-marshal and given him all the information in my possession in relation to them.

I have the honor to be, with great respect, your obedient servant,

ANDW. A. HARWOOD,
Commodore, Commanding Potomac Flotilla.

Hon. GIDEON WELLES,
Secretary of the Navy.

Report of Acting Master Street, U. S. Navy, commanding U. S. S. Primrose, of boat expedition up Monroe's Creek, Virginia.

U. S. S. PRIMROSE,
Station D, Potomac Flotilla, March 31, 1863.

SIR: Since making my last report I learned that at the time of our expedition up Rosier's Creek there were goods secreted in the cellar of Mr. Sutton's house on Bluff Point, and on the night following he carted them over to Bowlin Curley, on Monroe's Creek. This was on Friday night. On Saturday night Mr. Curley attempted to haul the goods over to the Rappahannock, but was intercepted by our cavalry, who captured horses, cart, and goods, but Mr. Curley escaped. I last night, in company with Captain Sheridan, of the *Teaser*, with three boats, went up Monroe's Creek and succeeded in capturing Mr. Curley. He does not hesitate to say that he has aided the blockade runners largely.

From a Mr. King, living at Kinsale (Mr. Watson's house), I have been able to gain important information. He states that two nights previous to my landing at Bluff Point a sloop belonging to Mr. James Woodey (living in Accomac County, eastern shore of Virginia) landed goods at Mr. Sutton's, and that she makes a trip every eight or ten days, landing the goods either at White Point or at Mr. Sutton's.

I have not been able to learn the name of the sloop, but will keep a sharp lookout for her.

This morning I steamed up to Bluff Point and sent an armed boat on shore under the charge of Master's Mate Charles Stewart to arrest Mr. Sutton, which he succeeded in doing. I send both of the prisoners to you by the *Teaser*.

Mr. Rollins, your clerk, Mr. Benjamin, of the *Teaser*, and Mr. Leland, second assistant engineer of this vessel, accompanied me on this occasion. Both officers and men on this expedition acted to my entire satisfaction, and am happy to add that thus far no casualties have occurred.

I have the honor to be, very respectfully, your obedient servant,

W. TELL STREET,
Acting Master, Commanding.

Lieutenant-Commander SAMUEL MAGAW,
Commanding First Division Potomac Flotilla.

Report of Acting Master Street, U. S. Navy, commanding U. S. S. Primrose, requesting authority for arrest of contrabandists.

U. S. S. PRIMROSE,
Station D, Potomac Flotilla, March 31, 1863.

SIR: I would most respectfully call your attention to the enclosed letter,* received by Mr. Rollins from his father; the names of the individuals mentioned therein are Milton Marmaduke, Edward Porter; the other not known.

There is a large quantity of cured meat at various points belonging to rebels in arms against the Government, and from various reliable sources I learn that they are waiting a favorable opportunity to convey

*Not found.

the same to the Army over the Rappahannock. May I ask if you will give me an order to take it; also to arrest the above persons?

I am, sir, your obedient servant,

W. TELL STREET,
Commanding.

Lieutenant-Commander SAMUEL MAGAW,
Commanding First Division Potomac Flotilla.

Report of Acting Master Van Boskirk, U. S. Navy, commanding U. S. S. Adolph Hugel, regarding capture of whisky.

U. S. S. ADOLPH HUGEL,
Guard Ship off Alexandria, April 1, 1863.

SIR: While one of the boats of this vessel was out on guard duty under the charge of Acting Master's Mate Horace B. Miller during last night, he captured a boat on the Maryland shore loaded with four breakers of whisky. The appearance of the boat indicated that it had been hastily abandoned. After taking the whisky from the boat, destroyed it, as it was half full of water and nearly unfit for use.

I take this first opportunity of sending the officer that captured it to you, having in charge the whisky.

I am, sir, very respectfully, your obedient servant,

JAMES VAN BOSKIRK,
Acting Master, Commanding.

Commodore ANDREW A. HARWOOD,
Commanding Navy Yard and Potomac Flotilla.

Instructions from Commodore Harwood, U. S. Navy, commanding Potomac Flotilla, to Lieutenant-Commander Magaw, U. S. Navy, commanding First Division, regarding seizure of supplies intended for the Confederate Government.

APRIL 6, 1863.

SIR: I have received your letter and the reports of Acting Master W. T. Street.

The utmost vigilance is expected to prevent the transmission of supplies across the peninsula.

With regard to the letter of Mr. Rollins and the accumulation of cured meat and other provisions, supposed to be intended to supply the enemy, proper care must be taken to discriminate between provisions laid up for the use of the people who work the plantations and goods evidently stored up to supply the enemy. Due allowance in entertaining reports must be made for the embittered feeling which exists on what may be termed the neutral ground.

Whenever you are satisfied from reliable sources that goods or provisions are to be found which are intended for transportation to the rebel lines, you will give immediate notice to the nearest provost-marshal of the Army, and proffer any naval assistance that may be necessary.

Act at your discretion if there are no military authorities within reach, and if there are, refer cases which relate to the land to them.

Your question with regard to passengers belonging to the land forces has been referred to the Navy Department.

Very respectfully, your obedient servant,

ANDW. A. HARWOOD,
Commodore, Commanding Potomac Flotilla.

Lieutenant-Commander SAMUEL MAGAW,
Commanding First Division Potomac Flotilla.

Report of Commodore Harwood, U. S. Navy, commanding Potomac Flotilla, transmitting certificate of capture by U. S. steamers Currituck and Anacostia.

POTOMAC FLOTILLA,
Navy Yard, Washington, D. C., April 7, 1863.

SIR: I enclose for the information of the Department a certificate of capture made on the 3d instant by the U. S. steamers *Currituck* and *Anacostia*, of the Potomac Flotilla.

The tobacco was found secreted in the house of James Hurst, a noted smuggler, situated about a mile from the anchorage at Indian Creek, Virginia. Hurst made his escape.

I have the honor to be, with great respect, your obedient servant,

ANDW. A. HARWOOD,
Commodore, Commanding Potomac Flotilla.

Hon. GIDEON WELLES,
Secretary of the Navy.

[Enclosures.]

U. S. S. CURRITUCK, POTOMAC FLOTILLA,
Indian Creek, Va., April 3, 1863.

SIR: Having received information from a reliable source that a quantity of medicines for the use of the rebel Army was expected at this place, I left the Rappahannock this morning, accompanied by the *Anacostia*.

On arriving here I detailed fifty men from the two vessels to proceed to the house of James Hurst, about a mile from our anchorage, who was the consignee; he left on our approach and could not be captured. The house was thoroughly searched and 19 boxes of tobacco found. We ascertained that a quantity of goods was sent by him to Richmond that morning.

I have reason to know that Hurst is the most extensive speculator in the county, and his house the headquarters of all the smugglers from the Maryland shore and all rebel soldiers belonging to the county on leave of absence.

I send you the tobacco in the care of Paymaster Frank Clarke, of this vessel, who goes to Washington for funds.

I am, sir, very respectfully, your obedient servant,

T. J. LINNEKIN,
Acting Master, Commanding, and Senior Officer, Station H.

Commodore A. A. HARWOOD,
Commanding Potomac Flotilla, Washington, D. C.

Potomac Flotilla.—Certificate of capture.

Name and character of prize.—Eighteen boxes tobacco.
By whom and by what vessel capture made.—*Currituck* and *Anacostia.*
When capture made.—April 3, 1863.
Where and for what reasons.—At the house of James Hurst, 1 mile from Indian Creek, Virginia; a large speculator in smuggled goods.

APRIL 4, 1863.

I hereby certify that the above-mentioned 18 boxes tobacco was captured by the undersigned, commanding the U. S. S. *Currituck*, of the Potomac Flotilla, at the time and place above designated, and that the above and annexed statement is true in every particular.

T. J. LINNEKIN,
Acting Master, Commanding.

[Telegram.]

NAVY DEPARTMENT, *April 13, 1863.*

Send the *Yankee* and one other steamer to Acting Rear-Admiral Lee at once. Send list, semimonthly, of your force.

GIDEON WELLES,
Secretary of the Navy.

Commodore A. A. HARWOOD,
Commandant Navy Yard, Washington.

[Telegram.]

NAVY YARD, WASHINGTON,
April 13, 1863—1:40 p. m.

Orders will go down immediately for the *Yankee* and the *Primrose* to join Acting Rear-Admiral Lee. The report of my force will be sent in as soon as it can be made up. *Currituck*, *Reliance*, and *Satellite* are all at the yard for repairs. There is but one steamer of any force at the Rappahannock.

A. A. HARWOOD,
Commodore.

SECRETARY OF THE NAVY.

[Telegram.]

NAVY DEPARTMENT, *April 13, 1863.*

At what hour and date did the *Penobscot*, *Yankee*, and *Primrose* leave for Hampton Roads? Send two more of your lightest draft armed steamers without delay, and report what hour they leave.

GIDEON WELLES.

Commodore HARWOOD,
Navy Yard, Washington.

Order of Commodore Harwood, U. S. Navy, commanding Potomac Flotilla, to Lieutenant-Commander McCrea, U. S. Navy, commanding Second Division, regarding U. S. S. Primrose.

POTOMAC FLOTILLA.
COMMANDANT'S OFFICE, NAVY YARD,
Washington, April 13, 1863.

SIR: Dispatch the U. S. S. *Primrose* without delay to Newport News, Va., and direct Acting Master Street to report his vessel for service on her arrival to Acting Rear-Admiral S. P. Lee, commanding North Atlantic Blockading Squadron.

Very respectfully, your obedient servant,

ANDREW A. HARWOOD,
Commodore, Commanding Potomac Flotilla.

Lieutenant-Commander EDWARD P. MCCREA,
Commanding Second Division Potomac Flotilla.

[Endorsement.]

SIR: You will report immediately in obedience to the above order.

Very respectfully, etc.,

E. P. MCCREA,
Lieutenant-Commander, Second Division, Captain of the Fleet.

[Acting Master STREET, U. S. Navy,
Commanding U. S. S. Primrose.]

Report of Lieutenant-Commander Magaw, U. S. Navy, commanding First Division Potomac Flotilla, transmitting letter from General Hooker, U. S. Army, requesting cooperation in the Rappahannock River.

Semiofficial.]

U. S. S. FREEBORN,
Potomac Flotilla, April 14, 1863.

DEAR SIR: The *Yankee* has sailed for Newport News. I enclose you a copy of General Hooker's letter of last night. I have sent an extract to McCrea, and will leave here this afternoon for the Rappahannock. I send the *Resolute* up with this note, and a sick man from the *Yankee*. As I have but this steamer, the *Teaser*, and *Resolute*, I will be obliged to take one of the Second Division and will probably see Captain McCrea to-night. The schooner *T. A. Ward* remains at Aquia during my absence. Your letters, per *Resolute*, were duly received, and those for Captain McCrea sent down by the *Yankee*.

Very respectfully, etc.,

SAMUEL MAGAW,
Lieutenant-Commander.

Commodore A. A. HARWOOD,
Commanding.

[Enclosure.]

HEADQUARTERS ARMY OF THE POTOMAC, *April 13, 1863.*

The major-general commanding directs me to request that you will send two of your gunboats into the Rappahannock River to come up as far as Port Royal, and farther, if possible. He has reason to believe that the batteries located on the river below Port Royal have been withdrawn.

It is desired that your demonstrations shall hold the enemy in that vicinity, and keep them from retiring. If the batteries are there, the purposes for which you go would be favored by exchanging a few shots with them. It is hoped that this movement will be made as soon as possible.

He also desires that you should communicate to Commander McCrea his request that he will have a portion of his fleet ready to convoy a fleet of supplies to the Pamunkey River.

I am, very respectfully, your obedient servant,

S. WILLIAMS,
Assistant Adjutant-General.

Lieutenant-Commander MAGAW,
Potomac Flotilla.

Unofficial letter from Lieutenant-Commander Magaw, U. S. Navy, commanding First Division, to Commodore Harwood, U. S. Navy, commanding Potomac Flotilla, regarding proposed expedition to Port Royal, Va.

U. S. S. FREEBORN,
Potomac Flotilla, April 14, 1863—12 p. m.

My DEAR SIR: I shall make an effort to reach Port Royal by to-morrow night (15th), although I think Major-General Hooker, on our part, is making a very small feint. If we had some transports with raw troops on board, the enemy's attention might be attracted, but without a cooperating force, I fear "General W. P. Lee" will laugh at us. We are hard up for pilots, but will do our best. I shall take with me the *Anacostia* and *Dragon*.

Respectfully and faithfully, yours,

SAMUEL MAGAW,
Lieutenant-Commander.

Commodore A. A. HARWOOD,
Commanding Potomac Flotilla.

Report of Commodore Harwood, U. S. Navy, commanding Potomac Flotilla, regarding the withdrawal of vessels for duty in the Rappahannock River.

POTOMAC FLOTILLA,
Navy Yard, Washington, D. C., April 15, 1863.

SIR: I sent the *Ella* down yesterday with orders to dispatch the *Cœur de Lion* and *Teaser*. I had previously sent the order by telegraph to Aquia Creek.

The orders for the *Primrose* and *Yankee* were duly dispatched by the *Resolute* on Monday.

Last evening, April 14, I received the following telegram from Lieutenant-Commander Magaw, from Aquia:

> *Yankee* has gone. Lieutenant-Commander McCrea will receive your telegraphic order in relation to the *Cœur de Lion* and will send the *Cœur de Lion*. I will send the *Teaser* to-night.

This morning the *Resolute* returned and brought me information that Lieutenant-Commander Magaw had been called upon by General Hooker to assist him in the Rappahannock, and had left Aquia Creek for that purpose.

I send a copy of General Hooker's letter* to the Department by an officer that the exact state of things may be understood.

The *Freeborn*, *Jacob Bell*, *Dragon*, and *Anacostia* are the only effective steamers for the service required, and the withdrawal of them leaves the Potomac River comparatively unguarded. The *Resolute* is only fit for river duty, as her boilers want repairs. The *Currituck*, *Satellite*, and *Reliance* are at the yard for repairs; the *Reliance* will be ready for service to-morrow afternoon. The first two will be in hand two or three weeks. I beg leave to request the decision of the Department in relation to Acting Master Dockray, referred to in my letter of the 11th instant, No. 164, forwarding the record of a board of enquiry in his case.

I have the honor to be, with great respect, your obedient servant,

ANDW. A. HARWOOD,
Commodore, Commanding Potomac Flotilla.

Hon. GIDEON WELLES,
Secretary of the Navy.

The master boiler maker has just reported that the *Resolute* is not safe for further service, and that five weeks will be required to complete her repairs.

A. A. H.

[Telegram.]

NAVY DEPARTMENT, *April 15, 1863.*

You will have to carry out General Hooker's wishes with what force you have, retaining one steamer in the Potomac besides the *Ella*.

GIDEON WELLES,
Secretary of the Navy.

Commodore A. A. HARWOOD,
Commandant Navy Yard, Washington.

Weekly report of Lieutenant-Commander McCrea, U. S. Navy, commanding Second Division Potomac Flotilla.

U. S. S. JACOB BELL, GUARD SHIP,
Piney Point, April 15, 1863.

SIR: I have the honor to submit the following:

Since my last report the *Yankee* and *Teaser* of the First Division, and the *Cœur de Lion* and *Primrose*, of this division, have been ordered to report to Acting Rear-Admiral S. P. Lee at Hampton Roads, agreeably to your orders. There now remains in this division the *Jacob Bell*, at present guard ship; *Eureka*, *Wyandank*, storeship at Wicomico Station in the Potomac; *Anacostia* and *Dragon*, on Rappahannock station (H). The two latter at present are with Captain Magaw, he having gone up the Rappahannock at the request of General Hooker.

Captain Magaw forwarded me a request of General Hooker's, that I would have [a] portion of my vessels ready to convoy a fleet of supplies to the Pamunkey River. The Pamunkey being under Admiral Lee's command, I purposed, had the supplies arrived, to convoy them to the

* See p. 255.

senior officer in Admiral Lee's command on the station below the Piankatank and turn them over to him, as I considered I could not trespass on Admiral Lee's department without proper authority.

I have no vessels now for any purpose save this one, which is the guard ship.

I should like to have the *Ella* for the purpose of passing up and down the whole river, as the six mortar schooners are at their respective stations, and as captain of the fleet and senior officer present during the temporary absence of Captain Magaw.

Extremely bad weather since the receipt of your order regarding the vessels detailed to Admiral Lee has prevented their departure, but will leave at the first favorable change in the weather. Pilots decline going out in the heavy sea.

I have forwarded you a report of the engineer of the *Eureka* concerning the machinery of that vessel.

April 16, 6 a. m.—U. S. steamers *Yankee*, *Cœur de Lion*, *Primrose*, and *Teaser* sailed at 5:15 a. m. to-day for their destination. I send the *Ella* up immediately to let you know. I hope you [will] send her immediately back to me for service.

Very respectfully, your obedient servant,

E. P. McCREA,
Lieutenant-Commander and Captain of the Fleet.

Commodore A. A. HARWOOD,
Commanding Potomac Flotilla, Washington, D. C.

Report of Commodore Harwood, U. S. Navy, commanding Potomac Flotilla, transmitting intelligence regarding operations in the Rappahannock River.

POTOMAC FLOTILLA,
COMMANDANT'S OFFICE, NAVY YARD,
Washington, April 20, 1863.

SIR: I enclose herewith the copy of a letter from Acting Master Nelson Provost to Lieutenant-Commander Magaw, giving some information relative to the operations of the vessels belonging to the flotilla, and of the enemy in and near the Rappahannock.

I have the honor to be, with great respect, your obedient servant,

ANDW. A. HARWOOD,
Commodore, Commanding Potomac Flotilla.

Hon. GIDEON WELLES,
Secretary of the Navy.

[Enclosure.]

U. S. S. ANACOSTIA,
Potomac Flotilla, April 17, 1863.

SIR: I have the honor to inform you that, according to your instructions of the 15th instant, I proceeded up the Rappahannock River in company with the U. S. S. *Dragon*, Acting Master [George E.] Hill, commanding.

We arrived at Bristoe [Brisco] mines too late to proceed any farther with safety and anchored. From reliable information we found that the enemy were in strong force and with heavy batteries from Port Tobago [Tobacco, Va.] (4 miles above us) up to Fredericksburg; also that General Jackson commands the enemy below Fredericksburg.

Three hundred of the enemy's cavalry crossed the river above Bristoe [Brisco] mines on last Sunday evening, and remained two days, expecting to cut off some of our cavalry. There is a line of new entrenchments below Layton's, and a rebel regiment of cavalry under Colonel [S.] Crutchfield, 2 miles back. From information, I considered it prudent to drop down below Leeds during the night, as we had attracted the attention of the enemy, and spread the report that we were coming in force.

During our passage up the river (110 miles) and down, we did not receive any shots, although they had everything prepared to cut us off at or about Layton's, if we had remained a few hours longer. I am convinced that squads of the enemy's cavalry cross the river above and below Bristoe [Brisco] mines, almost daily.

From Jones Bluff, and all the way up the river we saw numerous army wagons.

Very respectfully, your obedient servant,

NELSON PROVOST,
Acting Master, Commanding.

Lieutenant-Commander SAMUEL MAGAW,
Commanding First Division Potomac Flotilla.

Report of Commodore Harwood, U. S. Navy, commanding Potomac Flotilla, transmitting enclosures regarding the disposition of the force under his command.

COMMANDANT'S OFFICE, NAVY YARD,
Washington, April 22, 1863.

SIR: I have this morning received the enclosed telegram from General Butterfield to Lieutenant-Commander Magaw, and as General Hooker is not apparently aware that all the disposable steamers are already cooperating with him or temporarily detached for service under Acting Rear-Admiral S. P. Lee, I enclose also a list of the vessels composing the Potomac Flotilla, with their whereabouts and condition, in order to prevent any misapprehension with regard to the availability of the flotilla in its present condition to assist the Army in two different quarters at once.

It is proper to remind the Department that the whole force of the yard has been employed in repairing vessels from different squadrons, and that the service which the vessels were upon being of a more important character than that in which the Potomac Flotilla has been engaged, the timely repair of vessels under my command has been unavoidably postponed until it could be deferred no longer. The call for what remains in condition for service in different quarters has been embarrassing, but I do not complain of that, and merely request to state in time exactly to what extent assistance can be afforded.

I have the honor to be, with great respect, your obedient servant,

ANDW. A. HARWOOD.

[Hon. GIDEON WELLES,
Secretary of the Navy.]

[Enclosures.—Telegram.]

HEADQUARTERS ARMY OF THE POTOMAC,
April 20, 1863.

The major-general commanding desires to be informed of the number of boats in the Potomac Flotilla, what you have, and where the boats

are. He has been advised by the President that they will act under his orders. He desires that none should go away without his knowledge. He desires the same information with regard to the fleet of Commodore McCrea. Please answer.

DANL. BUTTERFIELD,
Major-General, Chief of Staff.

Lieutenant-Commander MAGAW.

POTOMAC FLOTILLA,
COMMANDANT'S OFFICE, NAVY YARD,
Washington, April 22, 1863.

The vessels of the Potomac Flotilla are distributed as follows:

Undergoing repairs at the navy yard.

Steamers.—Satellite, Currituck, Resolute.

With Acting Rear-Admiral Lee's squadron.

Steamers.—Yankee, Teaser (disabled), *Cœur de Lion* (disabled in action), wheelhouse and wheel shot away in action in the Upper Nansemond on the 18th; *Primrose.*

Under Lieutenant-Commander E. P. McCrea.

Steamers.—Jacob Bell, crank cracked and banded for temporary service; *Eureka*, only fit for river service, disabled; *Wyandank*, storeship, not available; *Reliance*, convoy of General Hooker's supplies.

Sailing vessels (mortar schooners).—Racer, George Mangham, Sophronia (guard vessel), with *Eureka*, at Piney Point, as tender.

Under Lieutenant-Commander Samuel Magaw.

Steamers.—Anacostia, Dragon, both in the Rappahannock River; *Freeborn*, Aquia Creek; *Ella*, dispatch vessel, Piney Point.

Sailing vessels (mortar schooners).—T. A. Ward, Aquia Creek; *Dan Smith, Adolph Hugel* (guard vessel), Alexandria, Va.

Semiofficial letter from Commodore Harwood, U. S. Navy, commanding Potomac Flotilla, to Lieutenant-Commander Magaw, U. S. Navy, commanding First Division, regarding the insufficency of the force in those waters.

APRIL 22, 1863.

MY DEAR SIR: Your letter of the 21st instant, with General Butterfield's telegram of the 20th to you, was received this morning by the *Leslie.*

I sent you an answer by telegram, by which you will perceive that we had already sent pretty much everything but "lame ducks" and mortar schooners to the Rappahannock or to Acting Rear-Admiral Lee.

Teaser and *Cœur de Lion* are disabled, the latter in the fight at Nansemond. The pull is in too many directions at once for our feeble means of supply. Nevertheless, you must take anything that can be made available and do the best you can.

I send you a list with the where and what-about of the flotilla, etc.

Yours, very truly,

ANDW. A. HARWOOD.

Lieutenant-Commander SAMUEL MAGAW,
Commanding First Division Potomac Flotilla.

Report of Lieutenant-Commander Magaw, U. S. Navy, commanding First Division Potomac Flotilla, regarding list of vessels.

U. S. S. FREEBORN,
Potomac Flotilla, April 22, 1863.

SIR: I have the honor to acknowledge the receipt of your note and the list of vessels of the flotilla; a copy of the letter I will send to General Hooker this morning.

I told him in my telegram of yesterday that we had four vessels all told (steamers) in the flotilla, but did not name them; I meant the *Freeborn*, *Anacostia*, *Dragon*, and *Reliance*.

Very respectfully, etc.,

SAMUEL MAGAW,
Lieutenant-Commander.

Commodore A. A. HARWOOD,
Commanding Potomac Flotilla, Washington, D. C.

Order of the Secretary of the Navy to Commodore Harwood, U. S. Navy, commanding Potomac Flotilla, enjoining caution against spies in the character of refugees.

NAVY DEPARTMENT, *April 24, 1863.*

SIR: The Department is of opinion that the interests of the public service require that persons seeking, or pretending to seek the protection of the vessels of the flotilla and representing themselves as refugees from the insurrectionary States, should be received with great caution, as many of them are doubtless acting as spies. You will, therefore, direct that our officers be on their guard in future as to the receiving of those who apply to them under circumstances at all suspicious. It is not intended that this order shall apply to that class of persons known as contrabands.

I am, respectfully, etc.,

GIDEON WELLES,
Secretary of the Navy.

Commodore A. A. HARWOOD,
Commanding Potomac Flotilla, Washington.

Report of Commodore Harwood, U. S. Navy, commanding Potomac Flotilla, acknowledging Department's instructions regarding refugees.

POTOMAC FLOTILLA,
Navy Yard, Washington, May 19, 1863.

SIR: I have to acknowledge the receipt of your letter of April 24 (missent) expressing an opinion that refugees from the insurrectionary States should be received with great caution, etc., and in accordance therewith the necessary instructions will be given to officers to be on their guard for the future.

I have the honor to be, with great respect, your obedient servant,

ANDW. A. HARWOOD,
Commodore, Commanding Potomac Flotilla.

Hon. GIDEON WELLES,
Secretary of the Navy.

Letter from Brigadier-General Meigs, U. S. Army, to the Secretary of the Navy, requesting the detention of all sutlers' vessels for the Army of the Potomac.

QUARTERMASTER-GENERAL'S OFFICE,
Washington City, April 29, 1863.

SIR: The provost-marshal-general of the Army of the Potomac has telegraphed to me, requesting that all sutlers' vessels for the Army of the Potomac be stopped until further notice, and that no private vessels will be allowed to anchor or land between Belle Plain and Aquia Creek.

I have requested the Secretary of the Treasury to clear no vessels upon permits lately signed in this office, and have to request that you will instruct the flotilla not to pass sutlers' vessels until further notice.

I have the honor to be, your obedient servant,

M. C. MEIGS,
Quartermaster-General.

Hon. GIDEON WELLES,
Secretary of the Navy.

Order of Commodore Harwood, U. S. Navy, commanding Potomac Flotilla, to Lieutenant-Commander Magaw, U. S. Navy, commanding First Division, to stop all trading vessels on the Potomac.

APRIL 29, 1863.

SIR: Instruct commanding officers of your division not to pass any sutlers' vessels for the Army of the Potomac, and not to allow any private vessel to anchor or land between Belle Plain and Aquia Creek until further orders from the Department.

Very respectfully, your obedient servant,

ANDW. A. HARWOOD,
Commodore, Commanding Potomac Flotilla.

Lieutenant-Commander SAMUEL MAGAW.

[Telegram.]

NAVY YARD, WASHINGTON, *April 30, 1863.*
(Received at Washington 10:45 p. m.)

General Hooker requires all the available vessels suitable for the purpose at Aquia Creek to convoy storeships. Lieutenant-Commander Magaw has only the *Freeborn* stationed in Aquia Creek for the protection of the depot. McCrea has the *Reliance* and *Ella*. *Dragon* and *Anacostia* are at the mouth of the Rappahannock, the former unseaworthy; the rest are at Nansemond, except those which are under repairs. Orders have been sent to the officers to do the best they can, but if possible, it would be well to send vessels from the Chesapeake.

A. A. HARWOOD,
Commodore.

Hon. SECRETARY OF THE NAVY.

[Telegram.]

NAVY DEPARTMENT, *May 1, 1863.*

Dispatch two of the four tugs sent from the Potomac to the mouth of the Rappahannock.

GIDEON WELLES,
Secretary Navy.

Acting Rear-Admiral S. P. LEE,
Old Point Comfort.

[Telegram.]

NAVY YARD, WASHINGTON, *May 2, 1863.*

The Department directed Acting Rear-Admiral Lee to dispatch two of the tugs to the mouth of the Rappahannock yesterday. When they arrive, if not required there, offer their services to General Hooker for any duty which may be most urgent.

ANDREW A. HARWOOD.

Lieutenant-Commander SAMUEL MAGAW,
Aquia Creek.

[Telegram.]

AQUIA CREEK, *May 4, 1863.*

It is important to have more force at this point. If the *Currituck* is in condition, please send her down as soon as possible. She draws so little water that I can get her up this creek.

SAMUEL MAGAW.

Commodore HARWOOD.

[Telegram.]

NAVY YARD, WASHINGTON, *May 4, 1863.*

It is probable that the *Currituck* will be ready to leave the yard Thursday morning. The *Satellite* may be ready on Wednesday evening. The *Yankee* ought to be with you to-day; she left Hampton Roads yesterday.

A. A. HARWOOD.

Lieutenant-Commander MAGAW,
Aquia Creek.

[Telegram.]

NAVY YARD, WASHINGTON,
May 5, 1863.

Your telegram of April 29 directs that private vessels are not to be allowed to anchor between Belle Plain and Aquia Creek. Persons engaged in fishing still come with permits from General [John H.] Martindale for wandering on Virginia shore in that region, but I do not feel authorized to endorse such permits without further orders from you. Please inform me how to act.

A. A. HARWOOD,
Commodore.

The SECRETARY OF THE NAVY.

[Telegram.]

AQUIA CREEK, *May 5, 1863.*

I repeat the message of Mr. Fox. The *Dragon* is the only vessel here besides the *Freeborn* and *Ward*. I also send messages of General Williams.

SAML. MAGAW.

Commodore HARWOOD.

[Telegram.]

HEADQUARTERS ARMY OF THE POTOMAC, *May 5, 1863.*

The following has just been received:

Will it not be possible for you to send any gunboats up the Rappahannock?

S. WILLIAMS,
Assistant Adjutant-General.

Captain MAGAW,
Aquia Creek.

[Telegram.]

[HEADQUARTERS ARMY OF THE POTOMAC,]
May 5, 1863—3 p. m.

I hear the rebels are moving a force in the direction of Port Royal [Va.]; they may have a pontoon train that way. Would it not be well to have the gunboats come up as far as they can?

A. PLEASONTON,
Brigadier-General.

General WILLIAMS,
Assistant Adjutant-General.

[Telegram.]

AQUIA CREEK, *May 5, 1863.*

I have received yours and General Pleasonton's dispatch. No; steamers *Freeborn* and *Dragon*. They are considered necessary at this point. Two others, the *Yankee* and *Primrose*, are at the Piankatank and the mouth of the Rappahannock; can not leave without raising blockade. I doubt if they can get up above Tobago Bay, about 5 miles below Port Royal [Va.]. If you will assume the responsibility I will send everything under my command up the Rappahannock.

SAMUEL MAGAW.

General WILLIAMS,
Headquarters Army of the Potomac.

[Telegram.]

[HEADQUARTERS ARMY OF THE POTOMAC,]
May 5, 1863—3 p. m.

Your telegram received. General Pleasonton's dispatch has been transmitted to the commanding general. Pending his reply I do not feel at liberty to give, in his name, any instructions with regard to your steamers. Telegraph communication with the general has been interrupted for two or three hours, but will probably be reestablished. The unusually severe storm we are now having will doubtless postpone two or three days the execution of any design on the part of the enemy of throwing a bridge across the river below here.

S. WILLIAMS,
Assistant Adjutant-General.

Captain MAGAW,
Aquia Creek.

[Telegram.]

NAVY DEPARTMENT, *May 5, 1863.*

The four boats sent from the Potomac Flotilla to Hampton Roads have been ordered back. The first two left Hampton Roads with orders to report at the mouth of the Rappahannock, and probably arrived there yesterday. The other two were ordered to go to Aquia Creek, but to touch off the Rappahannock. They ought to have been there to-day. I acquaint you with these facts so you shall have all the information to enable you to afford the utmost assistance in carrying out the wishes of Major-General Hooker, which will be given you.

G. V. FOX,
Assistant Secretary.

Lieutenant-Commander MAGAW,
Senior Naval Officer off Aquia Creek.

[Telegram.]

NAVY YARD,
Washington, May 6, 1863—11:15 a. m.

Your telegram received. The storm I presume delays the *Cœur de Lion* and *Teaser*, both on their way. I hope to send you the *Currituck* and *Satellite* to-morrow or at furthest on Friday. Mr. Fox will come down on the *Ella* to Aquia to-day, leaving between 11 and 12.

HARWOOD, *Commodore.*

Lieutenant-Commander S. MAGAW,
Aquia Creek.

Report of Commodore Harwood, U. S. Navy, commanding Potomac Flotilla, transmitting report regarding the seizure of schooner Samuel First, May 6, 1863.

POTOMAC FLOTILLA,
Navy Yard, Washington, May 20, 1863.

SIR: I have to inform the Department of the seizure of the schooner *Samuel First*, on the 6th instant, by the U. S. S. *Dragon*, for an attempt to violate the blockade. The case has been referred, according to law, to the district court.

The enclosed report of Acting Master G. E. Hill, commanding the *Dragon*, will explain the reason alleged by the master of the schooner for his conduct. I have reason to believe that the rags alluded to were tents and old clothing left by the Army, which the "German in Alexandria" was about to appropriate, whether by permission of the military authorities or not, I am not informed.

I have the honor to be, with great respect, your obedient servant,

ANDW. A. HARWOOD,
Commodore, Commanding Potomac Flotilla.

Hon. GIDEON WELLES,
Secretary of the Navy.

[Enclosure.]

U. S. S. DRAGON,
Aquia Creek, May 10, 1863.

SIR: I have the honor to inform you that the schooner *Samuel First*, detained on Tuesday last (the 6th instant), was endeavoring to run alongside the wharf just above Potomac Creek entrance.

The reasons the captain of her gave for running in here were that a German in Alexandria had made a bargain with him to take from the wharf (before mentioned) 5 tons of rags, at $8 per ton, to be delivered at Philadelphia. I had him carefully overhauled, and found nothing aboard of him. His papers were all right, from Alexandria and bound to Philadelphia (via canal).

The schooner is 69 tons burden, and had a cargo of oats from Philadelphia to Alexandria for the Quartermaster's Department on her trip this way.

Very respectfully, your obedient servant,

G. E. HILL,
Acting Master, Commanding.

Lieutenant-Commander SAML. MAGAW,
Commanding First Division Potomac Flotilla.

Report of Acting Master Street, U. S. Navy, commanding U. S. S. Primrose, regarding capture of schooner Sarah Lavinia.

U. S. S. PRIMROSE,
Rappahannock River, Virginia, May 9, 1863.

SIR: I have the honor to report that yesterday, after searching up Carter's Creek for blockade boats and goods, but not succeeding in finding any, although I am informed that goods are being carried across almost daily from Dividing and Indian creeks to the head of Carter's Creek and Corrotoman River, and from thence to the south side of the Rappahannock, I then proceeded up to Corrotoman River. Not having a pilot acquainted with the channel, I took on board a colored man who was oystering near the mouth, who knew the channel partially. After he came on board I was informed that a schooner that had run the blockade was up the river. I went up as far with the vessel as my draft of water would allow, getting aground once, but was off again in twenty minutes.

I then manned my small boats and rowed up to the head of the river, where I found the schooner. The crew on our approach took to the shore and made their escape, but before leaving partially erased her name from the stern. From what I can decipher and since learn, I believe the vessel to be the *Sarah Lavinia*, of Deal's Island. There were no papers found on board or anything to indicate name or owners.

The vessel is light, with the exception of seven packages of gold lace found in the cabin, they having succeeded in landing her cargo at some point unknown, and had removed everything of any value, evidently with the view of abandoning her.

I shall send the prize to Washington under charge of Acting Master's Mate Jacob Hahn, who assisted in making the capture.

I am, very respectfully, your obedient servant,

WM. T. STREET,
Acting Master, Commanding.

Commodore A. A. HARWOOD,
Commanding Washington Navy Yard and Potomac Flotilla.

Report of Lieutenant-Commander McCrea, U. S. Navy, commanding Second Divison Potomac Flotilla, of the capture by U. S. S. Primrose of the schooner Sarah Lavinia, and of affairs of his command.

U. S. S. ELLA,
Potomac Flotilla, Rappahannock River, May 9, 1863.

SIR: I have the honor to make the following report:

I communicated with Lieutenant-Commander Magaw on the 7th instant; the *Dragon* was at Aquia Creek. Lieutenant-Commander Magaw requested the *Yankee*. I arrived here this afternoon, finding at anchor the *Yankee*, *Reliance*, and *Primrose*, the latter with a schooner, a blockade runner about 40 tons, captured up one of the neighboring creeks—Corrotoman. She had gotten nearly all her goods ashore but some gold lace and a few articles. I will send her up when opportunity occurs. The *Currituck* arrived at 9 p. m. this evening, which relieves the *Yankee*, which I have ordered to join Lieutenant-Commander Magaw. The *Reliance* will tow the schooner to Piney Point, where she will remain for the present.

The *Primrose* will remain here until the *Anacostia* arrives, which will be on Thursday, when she will proceed to the *Wyandank* for provisions, etc. I would suggest that the paymaster of the flotilla remain on board the *Wyandank* until his services can be dispensed with, as the arrival of the smaller vessels again upon the station demand of him money and small stores, and there is always trouble and delay if he is not present.

Acting Master Street reports some paroled prisoners, sailors, on board his vessel, whose accounts are adrift. I will attend to it when Paymaster Carpenter comes down.

I have ordered the *Bell* to the yard for repairs, and Acting Masters Bartholomew and Plunkett and Acting Ensign Gerrard as passengers under arrest, and the commanding officer of the *Bell* to report in accordance to your orders of the 7th instant. I enclose a letter in reference to Acting Ensign Gerrard.

I have repeatedly called the attention of the paymasters of the flotilla regarding the returns made to me regarding the number of petty officers and by whom rated, etc., but it seems they pay no attention to general orders, and think of nothing but getting up to Washington on some slight plea. I passed the *Cœur de Lion* and ordered her up to Washington for repairs. I am afraid the *Primrose* will have to undergo repairs to her machinery, but will hold a survey on it at the earliest moment. The following vessels of this division occupy the respective stations: *Currituck* and *Primrose*, Station H; *Anacostia*, Station G; *Reliance*, Station F; *Eureka*, at Blakistone Island, and *Wyandank*, in Wicomico River; *Sophronia*, guard vessel.

The *Satellite* will be ordered to Station H.

I shall be in the Potomac possibly to-morrow evening, either at Piney Point, or Blakistone Island.

Very respectfully, your obedient servant,

E. P. MCCREA,
Lieutenant-Commander and Captain of the Fleet,
Commanding Second Division Potomac Flotilla.

Commodore A. A. HARWOOD,
Commanding Potomac Flotilla.

Report of Lieutenant-Commander Magaw, U. S. Navy, commanding First Division Potomac Flotilla, regarding capture of schooner Samuel First and position of vessels of his command.

U. S. S. YANKEE,
Potomac Flotilla, May 11, 1863.

SIR: I have the honor to report the *Teaser* as being able to remain at her station for a while yet. I enclose the report* of Acting Master Hill, commanding the *Dragon*, in relation to the schooner *Samuel First*. I will release her after a few days unless I have your orders to send her up. The *Teaser* is at Nanjemoy; the *Dragon* gone down to coal and watch Mathias Point, where the enemy might make a demonstration upon some of our transportation coming up the river. The *Freeborn* has gone to Piney Point for coal, and the mortar schooners remain in the same position as my last report gives, with the exception of the *Dan Smith*, moved over from Mattawoman to Quantico Creek. She is in communication with the land forces at Dumfries.

Your obedient servant,

SAMUEL MAGAW,
Lieutenant-Commander.

Commodore A. A. HARWOOD,
Commanding Potomac Flotilla.

[Telegram.]

NAVY DEPARTMENT, *May 14, 1863.*

The order of April 29 forbidding the passage of sutlers' vessels is revoked.

Sutlers who have been stopped by said order will be allowed to pass.

GIDEON WELLES,
Secretary of the Navy.

Commodore A. A. HARWOOD,
Commandant Navy Yard, Washington, D. C.

Report of Commodore Harwood, U. S. Navy, commanding Potomac Flotilla, transmitting documents regarding capture of schooners Sarah Lavinia† and Ladies' Delight.

POTOMAC FLOTILLA,
Navy Yard, Washington, May 18, 1863.

SIR: I enclose herewith certificates of capture by a portion of the flotilla stationed at the Rappahannock, of the schooners *Sarah Lavinia* and *Ladies' Delight*, of Baltimore, and a large quantity of goods.

The vessels were empty when captured, the goods having been landed. Acting Master Linnekin having received information that a portion of the cargo of the schooner *Sarah Lavinia* and a quantity of stores belonging to the rebel Government were in their warehouse at Urbana, parties from the *Primrose*, *Currituck*, *Anacostia*, and *Satellite* were landed, and succeeded in getting the goods named in the certificate.

---

*See p. 265. † See also pp. 266, 267.

Commendable zeal seems to have been shown by the commanders of the vessels named above in the capture and destruction of the enemy's property.

I have the honor to be, with great respect, your obedient servant,

ANDW. A. HARWOOD,
Commodore, Commanding Potomac Flotilla.

Hon. GIDEON WELLES,
Secretary of the Navy.

[Enclosures.]

U. S. S. CURRITUCK,
Rappahannock River, May 14, 1863.

SIR: I have the honor to report that on the 12th instant at 4:30 a. m., accompanied by the *Primrose*, I left the mouth of the Rappahannock River for Carter's Creek to meet the *Satellite*, which I had sent up to the mouth of the Corrotoman River on the night of the 11th instant to intercept canoes which are frequently carrying goods across to Urbana. On my arrival there I sent boats up the main branch to look for contraband goods. In the meantime the *Satellite* came in and reported nothing seen during the night. At 11 a. m. our boats returned. From parties on shore they learned that the warehouses at Urbana were filled with Government goods, and that most of the cargo of the schooner *Sarah Lavinia*, captured in the Corrotoman on the 8th instant, was also there.

We got underway immediately, and at 12:45 p. m. arrived off Urbana. On seeing rifle-pits thrown up on the west side of the entrance we came to anchor in 10 feet of water, and I sent Acting Master Street, of the *Primrose*, to the east side of the entrance, with about 35 men, to reconnoiter. He soon came back and reported that he had found a large quantity of goods, and that there were no cavalry nearer than Bowlers Rocks, 15 miles distant. I immediately had boats dispatched and commenced bringing off goods; at 5 p. m. they were all on board.

Acting Master Robinson, commanding the *Satellite*, being well acquainted at this place, I ordered him, after giving him some extra men, to proceed up the creek to get some bacon that was stored on the wharf for the use of the rebels, but owing to the injection pipe of the steamer getting stopped up as she came into shallow water, the engine stopped and she went ashore on the east side of the channel, which put a stop to operations for the night.

On the morning of the 13th, at high water, tried to tow off the *Satellite*, but without success. At 9:30 a. m. I sent about 50 men under Acting Master Street to bring off the bacon. At 10 o'clock the *Anacostia* arrived and assisted us by sending in two boats; the bacon was all on board by 1:30 p. m. At 2 p. m. I dispatched the *Primrose*, Acting Master Street, with 65 extra men and boats to go 4 miles down the river and capture a lot of contraband goods, which I learned had been landed from the schooner *Sarah Lavinia*, and stored in various houses at that point.

At high water (7 p. m.), with the assistance of the *Anacostia*, I pulled off the *Satellite*, she having been lightened by removing a portion of her stores. At 9 p. m. the *Primrose* returned, and Acting Master Street reported having captured a large amount of whisky and several boxes of miscellaneous goods; he destroyed 11 barrels of whisky, not having time to bring them off; part of the goods had been removed before his arrival.

On the 14th instant, at 8 p. m., I dispatched Acting Ensign Nelson with 50 men in 5 boats to go up the creek above Urbana and bring out

the schooner *Ladies' Delight*, of Baltimore, which had been raised within the past two weeks, probably for the purpose of running the blockade. She was owned by a Mr. Street, a prominent secessionist and a leading citizen of Urbana. Mr. Nelson sent the schooner off in tow of three boats and proceeded up the creek with the other two and destroyed another schooner, which was scuttled. On his return he was fired into by a small party, supposed to be citizens. I am happy to say that no one was hurt on our side. When he returned the fire they fled.

Two refugees with their families came on board; also a large lot of contrabands, all of whom I shall forward to Point Lookout.

Very respectfully, your obedient servant,

T. J. LINNEKIN,
Acting Master, Commanding, and Senior Officer, Station H.

Commodore A. A. HARWOOD,
Commanding Potomac Flotilla, Washington, D. C.

Potomac Flotilla.—Certificate of capture.

Name and character of the prize.—Schooner *Sarah Lavinia*, of Deal's Island, Maryland.

By whom and by what vessel capture made.—Captured by Acting Master William T. Street, U. S. S. *Primrose.*

When capture made.—May 8, 1863.

Where and for what reasons.—Corrotoman River, for violating blockade.

The cargo, if any on board.—No cargo.

What papers found.—No papers.

Remarks.—This vessel was captured after succeeding in landing her cargo at some point unknown. The crew on our approach abandoned her, taking everything available. In the cabin were found seven packages of gold lace.

MAY 9, 1863.

I hereby certify that the above-mentioned schooner, *Sarah Lavinia*, was captured by the undersigned, commanding the U. S. S. *Primrose*, of the Potomac Flotilla, at the time above designated, and that the above and annexed statement is true in every particular.

WM. T. STREET,
Acting Master, Commanding.

Potomac Flotilla.—Certificate of capture.

Name and character of the prize.—Whisky, sugar, molasses, hams, etc., viz: Whisky, 57 barrels; molasses, 1 barrel; sirup, 3 barrels; sugar, 2 barrels; N. E. rum, 1 barrel; shoulders, 1 hogshead; flour, 8 bags; buckets, 23; brooms, 23; shovels, 54; spades, 18; hay forks, 18; solidified lye, 21 boxes; hoes, 2 boxes; coffee, 4 boxes; salts, 2 boxes; logwood, 2 boxes; pepper, 3 boxes; candles, 2 boxes; bacon, 575 pieces. Schooner *Ladies' Delight.*

By whom and by what vessel capture made.—*Currituck*, T. J. Linnekin; *Anacostia*, Acting Master Provost; *Primrose*, Acting Master Street; *Satellite*, Acting Master Robinson.

When capture made.—May 12, 1863; May 13, 1863; May 14, 1863.

Where and for what reasons.—Urbana, Va.

The cargo, if any on board.—No cargo.

What papers found.—No papers.

Remarks.—These goods were captured on shore, having run the blockade. They were found stored in several different houses awaiting transportation to Richmond. Part of these goods belonged to the so-called Confederate Government. The balance were brought in by the schooner *Sarah Lavinia*, which ran the blockade, and after discharging was captured by the *Primrose* in Corrotoman River. This schooner had been sunk for some time, but was raised about two weeks since, and being refitted for the purpose of smuggling.

RAPPAHANNOCK RIVER, *May 14, 1863.*

I hereby certify that the above-mentioned articles of merchandise were captured by the undersigned, commanding the U. S. S. *Currituck*, of the Potomac Flotilla, at the time above designated, and that the above and annexed statement is true in every particular.

T. J. LINNEKIN,
Senior Officer, Station H.

Report of Commodore Harwood, U. S. Navy, commanding Potomac Flotilla, transmitting report of Lieutenant-Commander Magaw, U. S. Navy, commanding First Division, regarding courteous relations between the Army and Navy.

NAVY YARD, WASHINGTON, *May 19, 1863.*

SIR: I forward herewith a communication from Lieutenant-Commander Magaw in relation to the courtesy and kindness extended by the military authorities to the First Division of the Potomac Flotilla, under his command.

Truly appreciating the importance of a cordial understanding between the two services, I take pleasure in forwarding to the Department this evidence of the satisfactory rélation between the Army of the Potomac and the flotilla.

I have the honor to be, with great respect, your obedient servant,

ANDREW A. HARWOOD,
Commodore, Commanding Potomac Flotilla.

Hon. GIDEON WELLES,
Secretary of the Navy.

[Enclosure.]

U. S. S. YANKEE,
Potomac Flotilla, May 15, 1863.

SIR: I beg respectfully to call your attention to the uniform courtesy and kindness which my division of the Potomac Flotilla has received at the hands of the army officers and others, heads of their respective departments at their post.

To Captain T. E. Hall, assistant quartermaster, we have often been indebted for coal, and for the use of his boats at such times as my own were either away or when I did not deem it prudent to send them from this point.

The assistance thus rendered has often enabled me to keep a larger force here when I should otherwise have been obliged to send them for coal, a distance of 60 miles, or to use them for the purpose of visiting other stations in my division.

These facilities have always been furnished us by Captain Hall when he was so situated that the public service of his own department would not suffer thereby.

Lieutenant-Colonel [A. Parker] Porter, commissary of subsistence at this post, has also at times supplied us with boats and has always furnished us by request with fresh beef and vegetables when he could do so consistently with the wants of the Army.

We have no other way of obtaining fresh provisions, and the good health of the men is undoubtedly in a great measure owing to the fresh food which we have received from the commissaries at this point.

Captain [Brownell] Granger, acting commissary of subsistence, has also been very attentive in conveying orders from me to the vessels in my division that lie on the route to his fleet of supplies now at Nanjemoy Creek.

To Mr. W. W. Wright, the superintendent of the railroad, we are also indebted for many favors, but particularly for the promptness with which he has supplied us with oil, our requisitions for that article not having been filled at the yard for several months.

Indeed, had it not been for the kindness of Mr. Wright in supplying [us] with this vital [article], the steam vessels of the flotilla would have been now perfectly useless.

Drs. [Thomas] McMillan and [Edward K.] Hogan have furnished us from time to time with medicines, of which we found ourselves greatly in need. I have taken the liberty of writing the above to you, knowing that you appreciate any favors done to the vessels of your command, and particularly when the services rendered were of such magnitude, involving, as it did at times, the very moving of the vessels.

I respectfully suggest that some acknowledgment be made to the above-mentioned gentlemen either by yourself or the Department.

Everything that we have ever asked for has been done with cheerfulness and with a remarkable promptitude.

I have the honor to be, your obedient servant,

SAMUEL MAGAW,
Lieutenant-Commander.

Commodore A. A. HARWOOD,
Commanding Potomac Flotilla.

Letter from Commodore Harwood, U. S. Navy, commanding Potomac Flotilla, to Lieutenant-Commander Magaw, U. S. Navy, commanding First Division, extending thanks for courtesies received from the Army.

JUNE 8, 1863.

SIR: Your letter of the 15th of May, referring to the courtesies received by your division of the Potomac Flotilla at the hands of certain officers of the Army of the Potomac, whom you name, was duly received and a copy of it sent to the Navy Department.

On the 4th instant I received the enclosed letter from the Secretary of the Navy, by which you will perceive the War Department has been made aware that yourself and officers wish to show their appreciation of the attentions they have received from the Army.

You will please give to the military officers named in your letter my warm thanks for their courtesy to those under my command, and my assurance that it will afford me great pleasure to reciprocate in every way in my power their good feeling.

Very respectfully, your obedient servant,

ANDW. A. HARWOOD,
Commodore, Commanding Potomac Flotilla.

Lieutenant-Commander SAMUEL MAGAW,
Potomac Flotilla.

Report of Commodore Harwood, U. S. Navy, commanding Potomac Flotilla, transmitting papers regarding the capture of sutler's schooner Mignonette, May 19, 1863.

POTOMAC FLOTILLA,
Navy Yard, Washington, May 25, 1863.

SIR: I enclose herewith the certificate of capture by the guard vessel at Piney Point of the sutler schooner *Mignonette*, for having on board of her articles not contained in her manifest, contrary to the stipulation contained in her permit.

The *Mignonette* arrived at the yard this morning in tow of the *Reliance*, and her papers have been forwarded to the district attorney.

I have the honor to be, with great respect, your obedient servant,

ANDW. A. HARWOOD,
Commodore, Commanding Potomac Flotilla.

Hon. GIDEON WELLES,
Secretary of the Navy.

[Enclosures.]

U. S. S. ELLA,
Potomac Flotilla, May 23, 1863.

SIR: I have the honor to forward per U. S. S. *Ella* the sutler's schooner *Mignonette*, she having forfeited her cargo by attempting to smuggle liquor. Enclosed is her special permit. The preparation was marked "Lediard's Army Tonic; or, Soldier's Friend," but really whisky cocktail.

The *Satellite* arrived last evening, bringing a prize schooner captured in the Rappahannock. I forward the reports* of Acting Master Linnekin and Acting Master Robinson of the particulars.

The *Wyandank* has returned with the lumber, and I think has brought a sufficiency for the purposes intended. She has returned to the station in Wicomico River. The *Anacostia*, *Currituck*, and *Satellite* are on Station H; *Reliance*, Stations F and G; *Eureka*, Station E; *Sophronia*, guard vessel at Piney Point.

Jacob Bell and *Primrose* have not yet returned from navy yard. *Cœur de Lion* returned this evening. *Primrose* has just reported.

Acting Master Morris, commanding *Cœur de Lion*, reports that—

At 9:40 a. m., May 23, saw schooner *Caroline Anderson* on fire; proceeded to her and rendered assistance; saved Captain Doughty and crew; also mainsail, some rigging, and stores; then hauled off and fired sixteen shot into her to scuttle her. I delivered the goods to the tug *Fisher;* also the captain and crew.

Very respectfully, your obedient servant,

E. P. MCCREA,
Lieutenant-Commander and Captain of the Fleet,
Commanding Second Division Potomac Flotilla.

Commodore A. A. HARWOOD,
Commanding Potomac Flotilla.

Potomac Flotilla.—Certificate of capture.

Name and character of the prize.—Schooner *Mignonette.*

By whom and by what vessel capture made.—W. R. Rude, commanding U. S. mortar schooner *Sophronia.*

When capture made.—May 19, 1863.

* See pp. 275, 276.

Where and for what reasons.—At Piney Point, for having on board two boxes containing, as per label on bottles, "Lediard's Army Tonic," but is really intoxicating drink and not entered on manifest.

The cargo, if any on board.—Sutler's supplies.

What papers found.—The vessel's clearance, manifest, permits, and bills of lading.

Remarks.—Said vessel was seized for violating the laws of the U. S. Government, having aboard two boxes containing intoxicating drinks and not specified on manifest.

MAY 19, 1863.

I hereby certify that the above-mentioned schooner *Mignonette*, of Baltimore, Md., was captured by the undersigned, commanding the U. S. mortar schooner *Sophronia*, of the Potomac Flotilla, at the time above designated, and that the above and annexed statement is true in every particular.

W. R. RUDE,
Acting Ensign, Commanding.

Report of Commodore Harwood, U. S. Navy, commanding Potomac Flotilla, transmitting papers regarding capture of schooner Emily, May 21, 1863.

POTOMAC FLOTILLA,
Navy Yard, Washington, May 25, 1863.

SIR: The *Ella* arrived this morning with the schooner *Emily*, loaded with miscellaneous cargo, a certificate of capture of which is herewith enclosed. She was taken by the *Currituck*, *Anacostia*, and *Satellite* on the 21st instant, 10 miles above Urbana, on the Rappahannock.

On the approach of our vessels the *Emily* was set fire to and abandoned by her crew, who succeeded in escaping to the shore. The fire was extinguished with very little damage to the vessel, and at the time it had just reached the cargo.

No papers were found on board, but by the remarks on the log slate and the charts found on board, it is ascertained that she came from New York and was probably commanded by John Sanford. A copy of the log slate is herewith enclosed.

Acting Master Linnekin in his report mentions that the day previous to the capture our cavalry had been about a mile above Monaskon wharf and burned a large quantity of goods.

I have the honor to be, with great respect, your obedient servant,

ANDREW A. HARWOOD,
Commodore, Commanding Potomac Flotilla.

Hon. GIDEON WELLES,
Secretary of the Navy.

[Enclosures.]

Potomac Flotilla.—Certificate of capture.

Name and character of the prize.—Schooner *Emily*, of New York.

By whom and by what vessel capture made.—*Currituck*, Acting Master Linnekin; *Anacostia*, Acting Master Provost; *Satellite*, Acting Master Robinson.

When capture made.—May 21, 1863.

Where and for what reasons.—Off Punch Bowl Point, Rappahannock River, for running the blockade.

The cargo, if any on board.—Miscellaneous.

What papers found.—Log slate and memorandum book.

RAPPAHANNOCK RIVER, *May 21, 1863.*

I hereby certify that the above-mentioned schooner, *Emily*, was captured by the undersigned, commanding the U. S. S. *Currituck*, of the Potomac Flotilla, at the time and place above designated, and that the above and annexed statement is true in every particular.

T. J. LINNEKIN,
Senior Officer, Station H.

Memorandum from log slate of schooner Emily.

Monday, May 18.—This day begins light winds and clear weather. At 6 o'clock weighed anchor and proceeded to sea; at 9:30 passed Sandy Hook; at 4 o'clock Barnegat light bore W., distant 3 miles; at 8, Absecon bore W., distant 5 miles. This day ends moderate winds and clear.

Tuesday, May 19.—This day begins moderate and clear. At 4 p. m., Cape Henlopen light W. N. W.; at 8 o'clock, Fenwick's Island light (Md.) bore N. W., distant 8 miles; at 1 a. m., Chincoteague bore N. W., distant 6 miles.

N. B.—The name of Captain John Sanford was found on one of the new charts.

Report of Acting Master Linnekin, U. S. Navy, commanding U. S. S. Currituck, regarding the capture of schooner Emily.

U. S. S. CURRITUCK,
Off Windmill Point, May 21, 1863.

SIR: I respectfully report that I left here this morning at 4 o'clock, accompanied by the *Anacostia* and *Satellite*, for Monaskon wharf, 9 miles above Urbana, to capture a lot of goods that I learned were at that place. At 6 o'clock, just above Urbana, I saw a schooner up the river. I sent the *Satellite* ahead, she being the fastest vessel and having a good pilot. At 6:20 I discovered the schooner to be on fire, and her boat leaving her, with about ten men, who landed on the south side of the river and made their escape. The *Satellite* stopped and fired her after gun, but the shot fell short; I signalized her to go ahead and extinguish the fire. At 7:15 the *Satellite* came up to and boarded her off Punch Bowl Point, 10 miles above Urbana, followed closely by this vessel and the *Anacostia*. She proved to be the schooner *Emily*, of and from New York, loaded with a miscellaneous cargo.

She was a little damaged in the main hatch where they had set her on fire, the deck being burned through, and some of the boxes charred before we could extinguish it. I ordered the *Satellite* to take her in tow and proceed to Monaskon wharf, where we came to anchor at 9 a. m.

We landed and learned that our cavalry had been here the day previous, and burned a large lot of goods about a mile above here. Finding nothing I immediately got underway and proceeded to this anchorage (mouth of the Rappahannock).

I beg leave to state that I planned this expedition yesterday, and therefore (contrary to my usual practice) ordered all the vessels to lie together at this point during the night, in order to start at the earliest possible moment this morning.

The omission to station a vessel near Stingray Point, on the south side of the Rappahannock, enabled this schooner to pass us in the night, but her escape was prevented by our early start this morning. I send the prize in charge of Acting Ensign Sommers, of the U. S. S. *Satellite*.

I herewith enclose a copy of the log slate found in the schooner's cabin. The log slate, a chart of Chesapeake Bay, and a memorandum book, supposed to contain a partial list of cargo, I forward by the officer in charge.

I would recommend the goods to be taken out as soon as possible, as some of them are quite wet from the water used in extinguishing the fire.

Very respectfully, your obedient servant,

T. J. LINNEKIN,
Acting Master, Commanding, and Senior Officer, Station B.

Lieutenant-Commander E. P. McCREA,
Comdg. Second Division Potomac Flotilla, Washington, D. C.

Report of Acting Master Robinson, U. S. Navy, commanding U. S. S. Satellite, regarding the capture of schooner Emily.

U. S. S. SATELLITE,
Rappahannock River, May 22, 1863.

SIR: I have the honor to report the capture of the schooner *Emily*, of New York, heavily loaded, on the morning of the 21st at 7:30 a. m. At 4 a. m. *Currituck*, *Anacostia*, and *Satellite* got underway and proceeded up the river. I signalized to the senior officer to let me go ahead, and was ordered to do so. When I arrived abreast of Urbana I discovered a vessel ahead, distant 8 miles. I then signalized to the senior officer that I saw a vessel ahead. I ordered all steam on, and gave chase. Coming within 4 miles of the above-named schooner, I discovered that they had set her on fire and the crew were leaving for shore. I fired a solid shot at them, but [it] fell short, steamed up and was soon alongside of the burning vessel, and with buckets and force pump soon put out the fire. No papers found on board, save two charts bearing the name Captain John Sanford; also a memorandum book, containing a list of goods on board. I here name the vessels claiming a share of the prize—U. S. steamers *Currituck*, *Anacostia*, and *Satellite*.

Very respectfully,

JNO. F. D. ROBINSON,
Acting Master, Commanding.

E. P. McCREA,
Lieutenant-Commander and Captain of the Fleet.

Report of Acting Master Robinson, U. S. Navy, commanding U. S. S. Satellite, of the capture of the schooners Arctic and Sarah, May 28, 1863.

U. S. S. SATELLITE,
Great Yeocomico [Wicomico?] River, May 28, 1863.

SIR: I have the honor to report the capture of the schooners *Arctic* and *Sarah*, up the eastern branch of the river. I had them stripped of their sails and set the *Arctic* on fire.

Yours, very respectfully, and obedient servant,

JNO. F. D. ROBINSON,
Acting Master, Commanding.

Commodore A. A. HARWOOD,
Commanding Navy Yard and Potomac Flotilla.

[Enclosure.]

Potomac Flotilla.—Certificate of capture.

Name and character of the prize.—Schooners *Sarah* and *Arctic*.

By whom and by what vessel capture made.—U. S. S. *Satellite*, Acting Master J. F. D. Robinson.

When capture made.—May 28.

Where and for what reasons.—Great Yeocomico [Wicomico?] River; owned by rebels and found in blockaded waters.

The cargo, if any on board.—None.

What papers found.—No papers.

Remarks.—The *Arctic* and *Sarah* were found in blockaded waters and destroyed. I had them stripped of their sails, 2 mainsails, 2 foresails, 1 jib, and stored at navy yard.

MAY 28, 1863.

I hereby certify that the above-mentioned schooners [*Sarah* and *Arctic*] were captured by the undersigned, commanding U. S. S. *Satellite*, of the Potomac Flotilla, at the time and place above designated, and that the above and annexed statement is true in every particular.

JOHN F. D. ROBINSON.

Report of Acting Master Street, U. S. Navy, commanding U. S. S. Primrose, regarding expedition to Tappahannock for the destruction of Confederate stores.

U. S. S. PRIMROSE,
Station H, Rappahannock River, Va., May 30, 1863.

SIR: I have the honor to report that at 3:20 a. m. I got underway at Lawsons Bay, in company with the steamers *Currituck*, *Anacostia*, and *Satellite*, to make an expedition to Tappahannock, where we arrived at 8:15 a. m. without being molested. A few cavalry were seen below Fort Lowry. The fort remains without any apparent alteration.

On our approach to Tappahannock a small sloop was seen standing up the river, when I was ordered by you to give chase, firing several shots at long range, but before I could reach her she succeeded in entering a creek about 2 miles above the town and made her escape. I therefore returned to the steamers off the town, as I did not deem it prudent to enter the creek with my small force.

By your order I went on shore, accompanied by boats from all the vessels. We landed safely, and on entering the town learned that a

company of cavalry were stationed here, but on our landing had fallen back to a church in the rear of the town that was used as their headquarters. While sending off to the vessels for more men Mr. Woods, master's mate of this vessel, hoisted an ensign on one of the most prominent buildings. On the arrival of the men we advanced, and after exchanging a few shots the rebels retreated to a small ravine about a mile back of the town, where they remained during the time we were on shore.

In the church was found several cavalry swords, a rifle, saddle, etc., that in their haste they did not take away.

Some of the principal houses were searched for arms, but none were found. In a storehouse was found a quantity of bacon and corn; this was destroyed.

In a large barn on the right of the town was found stored about 20,000 bushels of grain belonging to the Confederates. This in the afternoon I assisted in burning. As there was nothing further to be accomplished, I returned to the vessel.

At intervals during the day we fired back of the town to prevent the approach of the cavalry. From what I could learn while on shore there is no large force this side of Port Royal, nor do I think that there is any battery or artillery, and believe that the river is clear for the passage of our gunboats to that point.

I would also beg leave to mention Acting Assistant Surgeon Henry Johnson, of your vessel, who accompanied me on shore. I found him in this, as in several other expeditions, a most energetic and efficient officer, rendering assistance wherever he could be most useful.

I am, sir, very respectfully, your obedient servant,

WM. T. STREET,
Acting Master, Commanding.

Acting Master T. J. LINNEKIN,
Commanding Steamer Currituck, and Senior Officer Present.

Report of Acting Master Linnekin, U. S. Navy, commanding U. S. S. Currituck, regarding expedition to Tappahannock.

U. S. S. CURRITUCK,
Aquia Creek, June 15, 1863.

SIR: I beg leave to make the following statement in regard to depredations alleged to have been committed by the gunboats at Tappahannock, May 30:

The houses were searched by the officers for arms and armed men that they had learned were secreted in them, the men not being allowed to enter the houses, and to the best of my knowledge the search was made in a proper manner. No furniture was destroyed or taken from private houses. A small quantity of bedding, etc., was brought down to the beach by some of the men, but was restored by Acting Master Provost, who was in command of the party, to a negro woman who claimed it.

In regard to shelling the town, my report* states that "I threw a few shells into a ravine to the right of the village" after the pickets had fired on my men. No shells were thrown into the town.

---

*Not found.

I would also state that I have given strict and repeated orders to officers and men not to take private property or molest inoffensive citizens, and have warned them that disobedience of these orders would be punished to the extent of the law.

I have never given orders to men under my command to retaliate upon unarmed citizens for the firing of pickets, nor have they done so with or without my orders.

Very respectfully, your obedient servant,

T. J. LINNEKIN,
Acting Master, Commanding.

Lieutenant-Commander SAMUEL MAGAW,
Senior Officer, Potomac Flotilla.

Report of Acting Master Morris, U. S. Navy, commanding U. S. S. Cœur de Lion, requesting instructions regarding the disposition of wheat and corn.

U. S. S. CŒUR DE LION,
Piney Point, May 30, 1863.

SIR: While lying at anchor off Piney Point a man named Snyder, a Union resident of Lynch's Point, Va., came on board and informed me that he had been threatened by the residents of that place for his Union sentiments, and had accordingly left his home for safety within our lines. He also informed me that the rebel authorities intended to seize his wheat, which he desired me to take to prevent it from falling into the hands of the enemy. Accordingly I got underway and proceeded over to his residence, and succeeded in taking 100 bushels of wheat. I was also informed that a secessionist named Griffiths had been supplying the enemy with provisions. I landed at his farm and was informed by the overseer of the plantation that I had been informed correctly. I took off 30 bags of corn. Night coming on, and the corn not being a very good quality, I returned to my anchorage at Piney Point to inform you of the fact and await your orders as to the remainder. There are about 400 bushels of corn still remaining on the plantation. I have stored the wheat and corn, and turned over Mr. Snyder to the military authorities at Piney Point, as he landed there before coming on board.

Very respectfully, your obedient servant,

WM. G. MORRIS,
Acting Master, Commanding U. S. S. Cœur de Lion.

Commodore A. A. HARWOOD,
Comdg. Potomac Flotilla and Navy Yard, Washington, D. C.

Order of Commodore Harwood, U. S. Navy, commanding Potomac Flotilla, to Acting Volunteer Lieutenant Ives, U. S. Navy, to relieve Lieutenant-Commander McCrea as fleet captain of Potomac Flotilla.

MAY 30, 1863.

SIR: You are hereby directed to relieve Lieutenant-Commander McCrea as fleet captain. He will deliver to you such papers and memoranda as may be necessary to make you aware of any unfinished duties which will devolve upon you.

A copy of a letter* to Lieutenant-Commander Magaw, defining the position of adjutant fleet captain, is herewith enclosed.

You will retain command of the *Yankee*, making use of the *Ella* as a medium of communication with me when necessary.

Very respectfully, your obedient servant,

ANDW. A. HARWOOD,
Commodore, Commanding Potomac Flotilla.

Acting Volunteer Lieutenant T. POYNTON IVES,
Fleet Captain, Potomac Flotilla.

Report of Acting Master Street, U. S. Navy, commanding U. S. S. Primrose, regarding the capture of four men engaged in blockade running.

U. S. S. PRIMROSE,
Station H, Rappahannock River, Virginia, June 1, 1863.

SIR: I have the honor to report that yesterday, while Master's Mate Jacob Hahn was on shore at Lawsons Bay, he obtained information that four men (blockade runners) were at the house of Mr. John Carroll, waiting an opportunity to go North. I reported the circumstance to Captain Ives, on board the steamer *Ella*, and also to Acting Master Linnekin, of the steamer *Currituck*, who gave me permission to land at night and make the capture.

I started at 12 o'clock last night with the cutter, taking with me Jacob Hahn, accompanied by the first cutter from the *Currituck*, under the charge of Acting Ensign Thomas Nelson, Acting Assistant Surgeon H. Johnson, and Master's Mate Joseph A. Havens. Shortly after landing I obtained a negro as a guide, who knew where Mr. Carroll lived. After walking about 4 miles we came to the house, which we surrounded. On searching the house we found four men secreted under the bedding, named, respectively, John H. Hooper, John Harris, William Jones, and Robert Adams. On further search we found two Confederate flags, together with some dress patterns and remnants of calico sewed up in a bed.

There were also small quantities of thread, buttons, lace, etc., found, but being of no great moment we did not take them, but it proved conclusively that the place had been the headquarters of blockade runners. We also obtained $10,635 in notes and bonds belonging to the prisoners, which I have turned over to Captain Linnekin, together with the prisoners.

I am, very respectfully, your obedient servant,

WM. T. STREET,
Acting Master, Commanding.

Acting Master T. J. LINNEKIN,
Commanding Steamer Currituck.

Report of Lieutenant-Commander Magaw, U. S. Navy, commanding First Division Potomac Flotilla, recommending certain officers of his command.

Semiofficial.] U. S. S. ELLA, *June 2, 1863.*

DEAR SIR: The accompanying reports† will show you the doings of the flotilla in the Rappahannock. Acting Master Street is worthy of a

---

*Not found. †See preceding report.

better comand than the *Primrose*, and I hope he may have the best one of the new vessels that, I am told, have been purchased for the flotilla. Acting Ensign Jackson, of the *Anacostia*, I would recommend for the *Primrose*, if Mr. Street is transferred. I feel it my duty to say that Acting Volunteer Lieutenant Ives fills his position as chief of staff admirably. There are one or two little expeditions I have in view, in which we can harass the enemy, of which I will consult you personally.

In case Lieutenant-Commander Irwin takes charge of the Second Division, I would like to have Acting Master Schulze (now in charge of the *Jacob Bell*) detached and ordered to the *Freeborn* as my executive officer.

I beg you will ask the honorable Secretary if it is possible to grant honorable discharges to men of less term of service than three years. Several of the best men in the flotilla are two and one year's men, and their times expire between this and August.

Respectfully and faithfully, your servant,

SAMUEL MAGAW,
Lieutenant-Commander.

Commodore A. A. HARWOOD,
Commanding, etc.

Report of Lieutenant-Commander Magaw, U. S. Navy, commanding First Division Potomac Flotilla, regarding transfer of Colonel Kilpatrick's command across Rappahannock River.

U. S. S. ELLA,
Potomac Flotilla, June 2, 1863.

SIR: I have respectfully to report that, in accordance with the request of Major-General Hooker, of which I handed you a copy, I proceeded to Urbana, on the Rappahannock, and at 8 o'clock on Monday, the 1st of June, the time specified by General Hooker, I had the following vessels in a commanding position, viz, *Freeborn*, *Yankee*, *Currituck*, *Anacostia*, *Jacob Bell*, *Primrose*, and *Satellite*, leaving the *Cœur de Lion* to blockade.

The transportation for the cavalry arrived soon after, and at about 11:30 a. m. the embarkation of the troops commenced.

I sent the *Jacob Bell* with the transports to cover the landing, which was made on the east side of the Rappahannock at Carter's wharf.

At 9 o'clock this morning the last troops embarked and were safely landed.

The raid seems to have been so far a perfect success. Not a man has been lost. There was no attack by the enemy during the embarkation, and I think that their reason for not molesting Colonel Kilpatrick was that they did not like to encounter our fire, which would probably have been very destructive.

I think you have every reason to be satisfied with the conduct of the officers whose reports I enclose, respecting several expeditions that have been organized and carried out in this vicinity.

The vessels have now resumed their stations, and I herewith enclose a weekly report (for the coming week) as to the stations that I expect will be occupied by the vessels of both divisions of the Potomac Flotilla.

Very respectfully, your obedient servant,

SAMUEL MAGAW,
Lieutenant-Commander, etc.

Commodore A. A. HARWOOD,
Commanding Potomac Flotilla.

[Enclosure.]

HEADQUARTERS ARMY OF THE POTOMAC,
Camp near Falmouth, Va., May 28, 1863.

I am directed by the major-general commanding to inform you that Colonel Kilpatrick, commanding cavalry brigade now at Gloucester, has been ordered to have his force at Urbana to cross the Rappahannock on Monday morning next, June 1.

The following extract from his instructions is furnished for your information:

* * * * * * *

Ferryboats for crossing, gunboats and a small force of infantry to cover your embarkation, will be at Urbana in waiting for you Monday morning, June 1, at 8 a. m., and await your arrival.

Should any unforeseen occurrence prevent your arrival at Urbana at the time specified, the boats will await your arrival there.

* * * * * * *

Colonel Kilpatrick's command consists of about 800 dragoons.

The general commanding desires that you will have your gunboats in position to cover the crossing and cooperate fully with Colonel Kilpatrick in effecting it.

Three ferryboats, with a small force of infantry ordered from Aquia, will be sent down (to accompany your flotilla) for the purpose of assisting in the crossing of Kilpatrick's command. The general desires that after the troops have crossed, you will convoy these boats back to Aquia.

The general desires that your gunboats shall be in position at the time specified, and that every appliance and assistance in your power necessary for the purposes may be prepared and made available.

Captain Custer, of the U. S. cavalry, reports to the general that there is a good wharf at Urbana, and a good beach with 3 feet of water, gravel bottom, at a suitable point opposite, for landing the force on this side.

Very respectfully, your obedient servant,

DANL. BUTTERFIELD,
Major-General and Chief of Staff.

Lieutenant-Commander MAGAW,
Commanding Potomac Flotilla.

Lieutenant-Colonel [Joseph] Dickinson, of the staff, will accompany the expedition.

Certificate of capture of the sloop Flying Cloud, June 2, 1863.

Potomac Flotilla.—Certificate of capture.

Name and character of the prize.—Flying Cloud, sloop, of Baltimore, Md.

By whom and by what vessel capture made.—N. Provost, acting master, commanding U. S. S. *Anacostia*, and William T. Street, acting master, commanding U. S. S. *Primrose*.

When capture made.—June 2, 1863.

Where and for what reasons.—Tabb's [Tapp's] Creek, having run in with goods and afterwards sunk.

The cargo, if any on board.—None.

What papers found.—None.

Remarks.—The parties concerned have been taken previously near White Stone, Va.

U. S. S. *Anacostia, June 2, 1863.*

I hereby certify that the above-mentioned sloop, *Flying Cloud*, of Baltimore, Md., was captured by the undersigned, commanding the U. S. steamers *Anacostia* and *Primrose*, of the Potomac Flotilla, at the time above designated, and that the above and annexed statement is true in every particular.

NELSON PROVOST,
Acting Master, Commanding.

Report of Acting Master Babcock, U. S. Navy, commanding U. S. schooner T. A. Ward, regarding capture of four Confederates.

U. S. SCHOONER T. A. WARD,
Off Wicomico River, Md., June 3, 1863.

SIR: I have the honor to report the capture of the following-named persons while attempting to run the blockade of this river on the night of the 2d of June:

Lieutenant M. E. McKnew, First Maryland Cavalry (rebel).
G. M. Serpell, First Maryland Cavalry (rebel).
A. H. Wells, of Prince George's City [County?], Md.
A. Nettleton, of Richmond, Va.

I respectfully state that I have taken the following amount of money from the above-named prisoners:

M. E. McKnew,	Confederate States notes	$251
G. M. Serpell,	Confederate States notes	82
	United States notes	255
A. Nettleton,	United States notes	27
Total amount taken		615

The only cargo found in the boat was two small valises containing dry goods.

The boat that the prisoners were captured in was a small, leaky skiff, and would be of no value. I have broken her up.

Enclosed please find the money taken from prisoners, in three separate packages, marked with the name of the person taken from.

I am, sir, very respectfully, your obedient servant,

W. L. BABCOCK,
Acting Master, Commanding.

Lieutenant-Commander SAML. MAGAW,
Commanding First Division Potomac Flotilla.

General report of Commodore Harwood, U. S. Navy, commanding Potomac Flotilla, regarding operations of vessels of his command.

POTOMAC FLOTILLA,
Navy Yard, Washington, June 4, 1863.

SIR: The following are the recent operations of the Potomac Flotilla:

On the 30th ultimo, the steamers *Currituck*, *Primrose*, and *Satellite* proceeded to the town of Tappahannock, Va., had a skirmish with the enemy's cavalry (in which the latter retreated and no one was hurt), and destroyed a quantity of rebel stores, consisting of bacon and wheat, supposed to amount to about 20,000 [bushels].

On the same day Acting Master Morris, at the request of a man named Snyder, a Union resident of Lynch's Point, Va., sent and brought away Mr. Snyder, and a supply of wheat and corn, to prevent it from falling into the hands of the enemy. The grain has been stored at Piney Point, and Mr. Snyder turned over to the military authorities.

On the 1st instant, at midnight, the boats of the *Currituck* landed a party, and proceeding to the house of John Carroll, a notorious dealer in contraband goods, who lives about 4 miles from Lawsons Bay, Rappahannock [River], brought away four prisoners, a package of letters, and $10,455 in money and bonds. The prisoners, as appears from intercepted correspondence, were on their way to Maryland. They were concealed under the bedding, and on one of them was found a memorandum of his expenses from Richmond and a list of goods he was to purchase in Baltimore.

The *Ella* returned yesterday with Lieutenant-Commander Samuel Magaw and Acting Volunteer Lieutenant T. Poynton Ives, from the Rappahannock River.

Lieutenant-Commander Magaw reports that, in accordance with the request of General Hooker, communicated to me on Friday last, the *Freeborn*, *Yankee*, *Currituck*, *Anacostia*, *Jacob Bell*, *Primrose*, and *Satellite* all proceeded to Urbana, on the Rappahannock, in order to cover the crossing of Colonel Kilpatrick's cavalry, which were on their way from Gloucester. Soon after Lieutenant-Commander Magaw's arrival the transportation for the cavalry came and they were embarked and safely landed at Carter's wharf, on the east side of the Rappahannock, the last of them at 9 a. m. on the 2d instant. The raid, so well planned, appears to have been a perfect success; the cavalry brought away with them a large number of horses.

That there was no attack upon Colonel Kilpatrick's party by the enemy during the embarkation and crossing I think may be fairly attributed to the presence of the gunboats, which covered the party. I enclose the certificate of capture of the persons and money.

I have the honor to be, with great respect, your obedient servant,

ANDW. A. HARWOOD,
Commodore, Commanding Potomac Flotilla.

Hon. GIDEON WELLES,
Secretary of the Navy.

[Enclosure.]

Potomac Flotilla.—Certificate of capture.

Name and character of the prize.—Prisoners, John H. Hooper, John Harris, William Jones, Robert Adams. Ten thousand four hundred and fifty-five dollars were found belonging to the prisoners in bank notes and Pacific railroad bonds.

By whom and by what vessel capture made.—William T. Street, acting master, commanding U. S. S. *Primrose*, and a boat's crew from the U. S. S. *Currituck*.

When capture made.—June 1, 1863.

Where and for what reasons.—Four miles back of Lawsons Bay, Virginia. For being engaged in running the blockade.

The cargo, if any on board.—[None.]

What papers found.—[None.]

Remarks.—The prisoners were captured at the house of Mr. John Carroll, 4 miles from Lawsons Bay, Virginia, for being engaged in running the blockade. The money they tried to hide, but did not succeed.

On the person of John H. Hooper were found a memorandum of goods to be purchased in Baltimore and his expenses from Richmond, which are herewith enclosed.

JUNE 1, 1863.

I hereby certify that the above-mentioned prisoners and money were captured by the undersigned, commanding the U. S. S. *Primrose*, of the Potomac Flotilla, at the time and place above designated, and that the above and annexed statement is true in every particular.

WM. T. STREET,
Acting Master, Commanding.

Report of Acting Master Morris, U. S. Navy, commanding U. S. S. Cœur de Lion, of the burning of the schooners Odd Fellow and Sarah Margaret, while in search of blockade runner in Coan River.

U. S. S. CŒUR DE LION,
Piney Point, June 11, 1863.

SIR: Last evening I was informed by a captain of a schooner that a sloop had run into Coan River to land a contraband cargo. No vessel being in the harbor except the storeship *Wyandank*, I reported the fact to Captain Frank and immediately got underway to proceed after her. I arrived at the mouth of the river at 10 p. m.; the night being dark and could not discern anything, I came to anchor. At 3 a. m., sent two boats in quest of the sloop. One of the boats burned two schooners, named the *Odd Fellow* and *Sarah Margaret*, both of Yeocomico; also obtained intelligence of the capture of the sloop by the revenue cutter *Hercules*. Previous to my arrival, four contrabands belonging to a rebel named [J. T.?] Travis, came alongside and desired to be taken off. I accordingly received them on board and delivered them to Lieutenant-Colonel Massey at Piney Point.

Very respectfully,

W. G. MORRIS,
Acting Master, Commanding, etc.

Acting Volunteer Lieutenant T. P. IVES,
Captain of the Fleet.

[Telegram.]

NAVY DEPARTMENT, *June 13, 1863.*

Send the *Mahaska* immediately to Aquia Creek to guard that depot. Let Captain Creighton communicate with the military forces, and, if necessary, have other gunboats at that position.

GIDEON WELLES,
Secretary of the Navy.

Commodore A. A. HARWOOD,
Commandant Navy Yard, Washington, D. C.

[Telegram.]

NAVY DEPARTMENT, *June 13, 1863.*

At what hour did the *Mahaska* leave in obedience to my order of this date?

GIDEON WELLES,
Secretary of the Navy.

Commodore A. A. HARWOOD,
Commandant Navy Yard.

[Telegram.]

NAVY YARD, WASHINGTON, *June 13, 1863.*
(Received 3:40 p. m.)

The *Mahaska* left the yard at 3:15 p. m.

A. A. HARWOOD.

SECRETARY OF NAVY.

[Telegram.]

NAVY DEPARTMENT, *June 14, 1863—12 m.*

The Quartermaster-General suggests that the naval officer in command at Aquia use his influence to prevent the destruction of the wharves, bridges, etc., at Aquia Creek.

G. V. FOX,
Assistant Secretary of the Navy.

Commodore HARWOOD.

[Telegram.]

NAVY YARD, WASHINGTON, *June 14, 1863—10:14 a. m.*

Use your influence to prevent the destruction of the wharves, bridges, etc., at Aquia Creek.

A. A. HARWOOD.

Commander CREIGHTON.

[Telegram.]

AQUIA CREEK, *June 14, 1863—11:30 p. m.*

Dispatch to Captain Creighton is here. He says that all is right.

SAML. MAGAW.

Commodore HARWOOD.

[Telegram.]

NAVY DEPARTMENT, *June 14, 1863.*

Send the *Commodore Barney* to Aquia Creek as early as practicable.

GIDEON WELLES,
Secretary.

Commodore DORNIN,
Commandant Naval Station, Baltimore.

Order of the Secretary of the Navy to Commodore Harwood, U. S. Navy, commanding Potomac Flotilla, for the organization of field batteries.

NAVY DEPARTMENT, *June 15, 1863.*

SIR: You will organize immediately two batteries of field howitzers, four guns each, to be kept in complete and constant readiness day and night until further orders.

You are authorized to call upon the Bureau of Ordnance for the guns, ammunition, and such men as can be spared from the officers

and employés of the ordnance yard, the remainder of the men to be detailed from the most effective workmen of the navy yard.

The men of these two batteries are to be drilled, and the guns, etc., inspected in the morning and evening of each day at such times as may be most convenient.

Very respectfully,

GIDEON WELLES,
Secretary of the Navy.

Commodore A. A. HARWOOD,
Commandant Navy Yard, Washington, D. C.

Report of Commodore Harwood, U. S. Navy, commanding Potomac Flotilla, regarding disposition of the vessels of his command.

POTOMAC FLOTILLA,
Navy Yard, Washington, June 17, 1863.

SIR: The *Ella* arrived this morning, and Acting Volunteer Lieutenant Ives brings the following information from Aquia Creek:

There were but 600 Federal troops left at the place.

About midnight last [night] all the movable property had been safely shipped for transportation. Nothing of consequence but some timber remained, and it was hoped that this might be got away.

The vessels of the flotilla are disposed of as follows:

At Aquia Creek.—The *Mahaska* outside the bar, about 1,300 yards from the wharf; *Freeborn*, *Currituck*, in the creek above the wharf; *Yankee*, *Dragon*, below the wharf; *Resolute*, cruising on the river, watching particularly Mathias Point.

At the mouth of the Rappahannock.—Anacostia, Satellite.

At Piney Point.—Sophronia, Cœur de Lion.

The other mortar vessels and the store vessel are at their ordinary stations.

As soon as vessels can be spared from Aquia Creek, or sent from this yard, where their repairs are being pushed, a larger force will be sent to the Rappahannock and its neighborhood to look out for the contrabandists.

I have the honor to be, with great respect, your obedient servant,

ANDW. A. HARWOOD,
Commodore, Commanding Potomac Flotilla.

Hon. GIDEON WELLES,
Secretary of the Navy.

Report of Acting Master Street, U. S. Navy, commanding U. S. S. Primrose, regarding expedition to Stratford Mills, Va., in search of contrabandists.

U. S. S. PRIMROSE,
Station E, Potomac Flotilla, June 18, 1863.

SIR: I would respectfully report that yesterday I made an expedition to Stratford Mills, Va., for the purpose of searching for goods that I learned had been landed a few days previous. I landed with an armed boat's crew, consisting of eight men and two officers. After

walking about 4 miles we came to the house of Mr. Schohardt, where the blockade runners were reported to be stopping.

Coming suddenly upon the house, we succeeded in taking Morris Smith, who, on seeing us approach, attempted to escape. On searching the house we found a few articles of blockade goods, but as they were of no great value did not take them. In the house we found a compass belonging to Mr. Polk, a former extensive blockade runner, but now in Richmond.

I learned that three men had left with goods for Richmond. Mr. Smith I believe to be one of the party, and had only been at the house a couple of days. Mr. Schohardt I also arrested, but finding that it would be of no benefit to the Goverment to detain him, sent him on shore again.

I have the honor to be, your obedient servant,

WM. T. STREET,
Acting Master, Commanding.

Lieutenant-Commander SAMUEL MAGAW,
Commanding First Division Potomac Flotilla.

Report of Commodore Harwood, U. S. Navy, commanding Potomac Flotilla, regarding captures.

POTOMAC FLOTILLA,
Navy Yard, Washington, June 19, 1863.

SIR: The *Ella* arrived this morning from Aquia Creek, bringing up six stragglers, one smuggler, and a person describing himself to be a peddler.

All the parties were sent to the provost-marshal of the district.

I have the honor to be, with great respect, your obedient servant,

ANDW. A. HARWOOD,
Commodore, Commanding Potomac Flotilla.

Hon. GIDEON WELLES,
Secretary of the Navy.

Report of Commodore Harwood, U. S. Navy, commanding Potomac Flotilla, transmitting report regarding seizure of sloop yacht Richard Vaux and destruction of the buildings at Aquia Creek, Virginia, by the Confederates.

POTOMAC FLOTILLA,
Navy Yard, Washington, June 23, 1863.

SIR: I herewith enclose copy of a report made by Acting Volunteer Lieutenant T. P. Ives of the seizure of the sloop yacht *Richard Vaux* by the U. S. S. *Primrose*. The sloop is now at this yard.

The refugees and persons claiming to be stragglers have been turned over to the provost-marshal of the district.

I have the honor to be, with great respect, your obedient servant,

ANDW. A. HARWOOD,
Commodore, Commanding Potomac Flotilla.

Hon. GIDEON WELLES,
Secretary of the Navy.

[Enclosures.]

U. S. S. ELLA, *June 23, 1863.*

SIR: We have brought up the sloop yacht *Richard Vaux*, taken at Blakistone Island by the *Primrose*, as she was not furnished with the proper naval pass from the guard vessel at Alexandria. She is painted lead color, would make a valuable blockade runner, and was brought here to sell, so some of the men on board say. I think the circumstances suspicious.

We have also brought up refugees and persons claiming to be stragglers from our Army.

Last evening at a quarter past 8 o'clock the buildings recently occupied by our forces at Aquia Creek were discovered to be on fire. In about an hour they were totally destroyed, together with the greater part of the wharf, the outer end of which, however, does not appear to be badly damaged.

I was on board the *Mahaska* at the time, but was unable to see any enemy on shore, although some of the officers of that vessel thought they could see three or four men. The *Mahaska* fired a few shots, as did also the *Resolute* and the mortar schooner. The destruction was very complete. All the buildings are burned except one or two small ones that are situated nearly a mile back from the end of the wharf.

The buildings and wharves at Yubadam and at Windmill Point have not as yet been destroyed by the enemy.

Very respectfully, your obedient servant,

THOMAS POYNTON IVES,
Acting Volunteer Lieutenant and Fleet Captain.

Commodore ANDW. A. HARWOOD,
Commanding Potomac Flotilla.

Potomac Flotilla.—Certificate of capture.

Name and character of prize.—Sloop yacht *Richard Vaux.* Names of crew found on board: John Redman, Charles McCarty, Samuel Winslow, Charles McKarnan, John Guyer.

By whom and by what vessel capture made.—Charles Stewart, master's mate, U. S. S. *Primrose.*

When capture made.—June 20, 1863.

Where and for what reasons.—Off Blakistone Island, Potomac River. Having no pass; papers not correct; no captain on board, and for violating the coastwise law.

The cargo, if any on board.—Old iron and rags.

What papers found.—Enrollment license, manifest, and clearance from Philadelphia; manifest from Alexandria.

Remarks.—This vessel was loaded on the 15th instant, bound up the river, but having a pass from the guard vessel and being in ballast was allowed to proceed. Was loaded on her passage down, and found that she had no pass, no clearance, and had stopped at several points on the river to trade.

SATURDAY, *June 20, 1863.*

I hereby certify that the above-mentioned vessel and crew were captured by the undersigned, commanding the U. S. S. *Primrose*, of the Potomac Flotilla, at the time and place designated, and that the above and annexed statement is true in every particular.

WM. T. STREET,
Acting Master, Commanding.

[Telegram.]

NAVY DEPARTMENT, *June 25, 1863.*

Send one of your small gunboats round to Havre de Grace to protect the ferryboat and other property there.

GIDEON WELLES,
Secretary of the Navy.

Commodore HARWOOD.

[Telegram.]

NAVY YARD, WASHINGTON, *June 25, 1863—11:15 a. m.*

The order for the protection of the ferry at Havre de Grace will be dispatched immediately.

ANDREW A. HARWOOD.

HON. SECRETARY OF THE NAVY.

Report of Commodore Harwood, U. S. Navy, commanding Potomac Flotilla, of the arrival of schooner Henry Wolcott, in tow of U. S. S. Satellite.

POTOMAC FLOTILLA,
Navy Yard, Washington, June 26, 1863.

SIR: I have to report for the information of the Department the arrival at this yard to-day of the schooner *Henry Wolcott*, in tow of the U. S. S. *Satellite*, Acting Master Robinson, who reports that she was run down by a steamer on the night of 22d instant, and that she was found abandoned by the *Satellite*, on her way from the Rappahannock to Piney Point. By the log book, this vessel appears to have been bound from New York to Matamoras, whether in legitimate trade or not remains to be proved. Her deck load, which is all that can be examined at present, seems to consist of army wagons.

Her log book, papers, etc., have been sent to the prize commissioners.

I have the honor to be, with great respect, your obedient servant,

ANDW. A. HARWOOD,
Commodore, Commanding Potomac Flotilla.

HON. GIDEON WELLES,
Secretary of the Navy.

Report of Acting Master Hill, U. S. Navy, commanding U. S. S. Dragon, of the capture of supposed Confederate spies.

U. S. S. DRAGON,
Station C, Potomac Flotilla, June 27, 1863.

SIR: I have the honor to inform you that this afternoon I captured a small canoe, with two men, calling themselves Charles Douglas and Joseph Parsons, attempting to cross the river from the Virginia to the Maryland shore, just below Maryland Point. There were no papers found on them, although they confessed to having torn up two letters.

I suspect these men are Confederate soldiers or spies, and I have treated them accordingly. The canoe was worthless and had nothing in it; I had it broken up.

Very respectfully, your obedient servant,

G. E. HILL,
Acting Master, Commanding.

Commodore A. A. HARWOOD,
Commanding Potomac Flotilla.

Report of Acting Master Phinney, U. S. Navy, commanding U. S. schooner Racer, regarding the capture of blockade runners.

U. S. MORTAR SCHOONER RACER,
Station D, Potomac Flotilla, June 28, 1863.

SIR: I send up two white men, giving their names as George Burnett and Alfred Hardingham, and a negro named William Frazer, who were captured while crossing from Virginia to Maryland about 11 o'clock last night by Acting Master's Mate D. B. Corey and a boat's crew from this vessel. Burnett says he was going North to transact some business, intending to return to Richmond, where he has a family. Hardingham has British papers and claims to be a refugee, but the contraband says he (Hardingham) had a square package, done up in oilcloth, which he threw overboard as soon as he found they were to be caught. I think it was a mail. No papers of any consequence were found on them, and they had but a small sum of money each, which was returned to them. The boat was worthless and was destroyed.

I am, sir, respectfully, your obedient servant,

ALVIN PHINNEY,
Acting Master, Commanding.

Commodore ANDREW A. HARWOOD,
Commanding Potomac Flotilla and Washington Navy Yard.

Report of Commodore Harwood, U. S. Navy, commanding Potomac Flotilla, regarding capture of blockade runners.

POTOMAC FLOTILLA,
COMMANDANT'S OFFICE, NAVY YARD,
Washington, June 29, 1863.

SIR: The *Mahaska* arrived here yesterday p. m. On her passage up the river she picked up a boat crossing from the Virginia to the Maryland shore, 5 miles below Aquia Creek, containing the following persons: Samuel Dent, William Flowers, P. Harrison. They stated that they were farmers, living at Wellington farms, Charles County, Md.

They have been committed to the custody of the provost-marshal of the district.

I have the honor to be, with great respect, your obedient servant,

ANDW. A. HARWOOD,
Commodore, Commanding Potomac Flotilla.

Hon. GIDEON WELLES,
Secretary of the Navy.

[Telegram.]

NAVY DEPARTMENT, *June 27, 1863—7:30.*

Admiral Lee will send up two gunboats to Washington and one to Annapolis. When they arrive, send two of your smallest boats into the Gunpowder River and one into the Bush River, to communicate with the military authorities there and assist in guarding the bridges. The two tug gunboats will leave New York Wednesday.

GIDEON WELLES,
Secretary of the Navy.

Commodore HARWOOD.

Report of Commodore Harwood, U. S. Navy, commanding Potomac Flotilla, regarding destruction of grain at Mathias Point, June 29, 1863.

POTOMAC FLOTILLA,
Navy Yard, Washington, July 1, 1863.

Sir: On the morning of the 29th a party from the U. S. S. *Dragon* landed and destroyed about $2,000 worth of grain stored in a barn below Mathias Point, which Acting Master Hill had been informed had been sold to the rebel Government.

I have the honor to be, with great respect, your obedient servant.

ANDW. A. HARWOOD,
Commodore, commanding Potomac Flotilla.

Hon. GIDEON WELLES,
Secretary of the Navy.

[Telegram.]

NAVY DEPARTMENT, *June 29, 1863.*

Call upon Colonel Harris for a sufficient guard to protect the naval magazine.

GIDEON WELLES,
Secretary of the Navy.

Commodore A. A. HARWOOD,
Commandant of Navy Yard, Washington, D. C.

Order of Commodore Harwood, U. S. Navy, commanding Potomac Flotilla, to Lieutenant-Commander Magaw, U. S. Navy, commanding First Division, to furnish protection to bridges in Gunpowder and Bush rivers.

JUNE 30, 1863.

SIR: Acting Rear-Admiral Lee has been instructed by the Department to send two gunboats to join the Potomac Flotilla temporarily.

When they arrive in the river, or sooner if you can without material injury to the service, send two of the lightest draft boats, one into the Gunpowder and one into the Bush River, to communicate with the military authorities there and assist in guarding the bridges.

The *Jacob Bell* will be ready for service to-morrow afternoon.

The two tug gunboats recently purchased for the flotilla will leave New York to-morrow, Wednesday.

A good lookout should be kept on Cockpit and Shipping points, and any other places where vessels may be annoyed by batteries. None should be allowed to be commenced while you can bring a gun to bear on them.

Very respectfully, your obedient servant,

ANDW. A. HARWOOD,
Commodore, Commanding Potomac Flotilla.

Lieutenant-Commander SAMUEL MAGAW, U. S. Navy,
Potomac River.

Take an occasional look at Mathias Point.

Order of the Secretary of the Navy to Commodore Harwood, U. S. Navy, commanding Potomac Flotilla, regarding relief of U. S. schooner William Bacon.

NAVY DEPARTMENT, *June 30, 1863.*

SIR: Send one of the best schooners in the Potomac or Chesapeake to Acting Rear-Admiral Lee, for the purpose of relieving the schooner *William Bacon*, now blockading off the inlets to the south of Wilmington, but in a too unseaworthy condition to be continued on that duty. Acting Rear-Admiral Lee has been instructed to send the *William Bacon* into the Potomac. The vessel you send should be supplied with an anchor of extra weight and proportional size chain of not less than 100 fathoms.

Very respectfully,

GIDEON WELLES,
Secretary of Navy.

Commodore A. A. HARWOOD,
Commandant Navy Yard, Washington.

Report of Commodore Harwood, U. S. Navy, commanding Potomac Flotilla, regarding arrests made by the vessels of his command.

POTOMAC FLOTILLA,
Navy Yard, Washington, July 1, 1863.

SIR: The *Ella* arrived this morning and brought up the following persons who had been arrested by the Potomac Flotilla in the act of crossing the river from Virginia to Maryland:

George Burnett, Alfred Hardingham; supposed to be blockade runners.

William Frazer (negro), captured with them.

Charles Douglas, Joseph Parsons; supposed to be Confederate soldiers or spies.

William Hunter, who represented himself as a deserter from the Tenth Louisiana Regiment.

These persons have been placed in the custody of the provost-marshal of the district.

I have the honor to be, with great respect, your obedient servant,

ANDW. A. HARWOOD,
Commodore, Commanding Potomac Flotilla.

Hon. GIDEON WELLES,
Secretary of the Navy.

[Telegram.]

NAVY YARD, WASHINGTON, *July 2, 1863—10:30.*

Place the *Cœur de Lion* in the best position for guarding the bridge. Cooperate with the military authorities without assuming any control over them. You can advise with the commanding officer and act according to your discretion, keeping in view the object you were sent to accomplish—the protection of the bridge.

A. A. HARWOOD.

W. G. MORRIS,
Commanding Cœur de Lion, Gunpowder River.

[Telegram.]

GUNPOWDER RIVER, *July 2, 1863—10:45 a. m.*

The steamer *Cœur de Lion* has arrived here. There are 200 infantry here also.

W. G. MORRIS.

[Telegram.]

NAVY YARD, WASHINGTON, *July 3, 1863—11:15 a. m.*

The *Teaser* has arrived this morning for coal. Acting Ensign Sheridan reports all quiet on the river, and no signs of any attempt to raise batteries. A few cavalry were seen between Shipping and Cockpit points, which were dispersed by a few shell from the gunboats.

A. A. HARWOOD.

SECRETARY OF NAVY.

Report of Lieutenant-Commander Magaw, U. S. Navy, commanding First Division Potomac Flotilla, transmitting statement of refugee regarding C. S. S. Patrick Henry.

Semiofficial.]

U. S. S. FREEBORN,
Potomac Flotilla, July 3, 1863.

DEAR SIR: I enclose you a statement made by a refugee who goes up in the steamer *Keyport* to-morrow, in charge of a detective, to the provost-marshal at Washington. I think it may be relied upon.

Respectfully and faithfully, your servant,

SAMUEL MAGAW,
Lieutenant-Commander.

Commodore A. A. HARWOOD,
Commanding Potomac Flotilla, etc., Navy Yard, Washington.

[Enclosure.]

Statement of William Harris.

I left Richmond on the 27th of June, and came off from the Virginia shore to the mortar (guard vessel) at Piney Point, Md., on the 3d of July. The steamer *Jamestown*, now the *Patrick Henry*, is lying in the James River at Drewry's Bluff, is ready for sea, and will try and get out. She mounts six or seven guns, and the enemy feel

confident they can get her out of the roads. I have this information from Mr. H. Halleck, who was imprisoned at the same time as John Minor Botts. Mr. Halleck begged me to give this information as soon as I reached the North, but to be careful that his name was not mentioned, as he is a loyal man, but his business and property oblige him to remain in Richmond. The *Patrick Henry* is fitted out as a privateer. Her charts were sent on board on the 25th (or about).

[WILLIAM HARRIS.]

SAMUEL MAGAW,
Lieutenant-Commander.

Commodore HARWOOD.

P. S.—Mr. Harris has been the manager of the street railroads in Richmond.

Letter from Commodore Harwood, U. S. Navy, commanding Potomac Flotilla, to Lieutenant-Commander Magaw, U. S. Navy, commanding First Division.

JULY 6, 1863.

SIR: I have to acknowledge the receipt of your letter of 3d instant, enclosing the statement of William Harris. The information, omitting names of persons, was transmitted by telegram to Acting Rear-Admiral Lee, and received by him July 4, 10 p. m.

Very respectfully, your obedient servant,

ANDREW A. HARWOOD,
Commodore, Commanding Potomac Flotilla.

Lieutenant-Commander SAMUEL MAGAW,
Commanding First Division Potomac Flotilla.

Report of Commodore Harwood, U. S. Navy, commanding Potomac Flotilla, regarding captured refugee.

NAVY YARD, WASHINGTON, *July 6, 1863.*

SIR: I have to report for the information of the Department that Acting Master J. C. Tole, commanding the *Resolute*, brought to this yard a refugee named Francis Moore, from South Carolina, who surrendered himself under a flag of truce at Aquia Creek on the 3d instant. I have placed him in custody of the provost-marshal of the district.

I have the honor to be, with great respect, your obedient servant,

A. A. HARWOOD,
Commodore, Commanding Potomac Flotilla.

Hon. GIDEON WELLES,
Secretary of the Navy, Navy Department.

[Telegram.]

NAVY DEPARTMENT, *July 6, 1863—10:10 a. m.*

Send the *Mahaska* immediately to Hampton Roads to report to Admiral Lee.

GIDEON WELLES,
Secretary of the Navy.

Commodore HARWOOD,

[Telegram.]

NAVY YARD, WASHINGTON, *July 6, 1863.*

The *Mahaska* left the yard for Hampton Roads at 12:45 p. m.

A. A. HARWOOD,
Commodore.

Hon. SECRETARY OF THE NAVY.

Order of the Secretary of the Navy to Commodore Harwood, U. S. Navy, commanding Potomac Flotilla, regarding movements of vessels.

NAVY DEPARTMENT, *July 6* [7], *1863.*

SIR: Send back to Rear-Admiral Lee the two gunboats belonging to his squadron, and withdraw those of your squadron stationed at Havre de Grace, Gunpowder, and Bush rivers.

Very respectfully, etc.,

GIDEON WELLES,
Secretary of the Navy.

Commodore A. A. HARWOOD,
Commandant Navy Yard, Washington.

[Telegram.]

NAVY YARD, WASHINGTON, *July 7, 1863.*

Return with the *Cœur de Lion* to the Potomac River, and on your return report to Lieutenant-Commander Magaw. Direct the vessel belonging to the Potomac Flotilla at Bush River to return also.

A. A. HARWOOD.

Acting Master MORRIS,
Gunpowder River.

Report of Commodore Harwood, U. S. Navy, commanding Potomac Flotilla, regarding movements of vessels.

POTOMAC FLOTILLA,
Navy Yard, Washington, July 8, 1863.

SIR: Your order of yesterday to send the gunboats belonging to the North Atlantic Blockading Squadron back to Acting Rear-Admiral Lee, and to withdraw those of my squadron stationed at Havre de Grace, etc., has been received and executed.

I have the honor to be, with great respect, your obedient servant,

ANDW. A. HARWOOD,
Commodore, Commanding Potomac Flotilla.

Hon. GIDEON WELLES,
Secretary of the Navy.

Report of Commodore Harwood, U. S. Navy, commanding Potomac Flotilla, of the arrival at the navy yard of prisoners of war and refugees.

POTOMAC FLOTILLA,
Navy Yard, Washington, July 10, 1863.

SIR: I have to report for the information of the Department that the *Ella* arrived last evening and brought up two prisoners of war arrested

in Lancaster County, Va., while on leave of absence. Their names are David and Thomas G. Masten, brothers, Tenth Virginia Cavalry. Also refugees as follows, viz:

Wilson Robertson, claiming to be a British subject; Jefferson Fisher, wife, and two children, and Mrs. Charles Norton and child.

These persons came to the schooner *Racer* just above Lower Cedar Point, under flag of truce.

I have turned all the above-named persons over to the provost-marshal, military district of Washington.

I have the honor to be, with great respect, your obedient servant,

ANDW. A. HARWOOD,
Commodore, Commanding Potomac Flotilla.

Hon. GIDEON WELLES,
Secretary of the Navy.

Report of Acting Master Street, U. S. Navy, commanding U. S. S. Primrose, of the capture of D. J. Payne.

U. S. S. PRIMROSE,
Station E, Potomac Flotilla, July 12, 1863.

SIR: I would respectfully report that yesterday I sent a boat's crew on shore in charge of Master's Mate Charles [A.] Stewart, at Stratford Mills, Va. On going up the road they saw a man approaching, keeping out of sight until he came up, when he was informed that he was a prisoner. His name is D. J. Payne, but in Virginia he goes by the name of Captain Harris. He is a resident of St. Mary's County, Md. On taking him he attempted to chew up a paper, which upon taking from him, proved to be a list of goods. Another piece he succeded in tearing to pieces so that it could not be joined again. From information gained on shore I believe him to be connected with Darrington, a noted smuggler, whom I arrested a short time ago at the same place.

About six weeks ago a schooner landed ordnance stores at this place, and from the people on shore who assisted in loading the carts I learn that Payne received the cargo and took it to Richmond. Payne formerly owned the schooner *Mechanic*, but, by his own statement, has sold her. I strongly suspect that this vessel is the one that landed the ordnance [stores] at the above place. After taking Payne on board, a young man who lived near by was brought off. He recognized Payne as the one who had charge of the above stores, and that he had often seen him in that vicinity with goods. Since being on board he has told to every one a different story. I find he is well acquainted with blockade running in this neighborhood. I arrested Payne, together with a number of others, on board the schooner *Mechanic* in St. Clement's Bay November 1, 1862, but [he] was afterwards let go by order of the captain of the fleet.

I have the honor to be, your obedient servant,

WM. TELL STREET,
Acting Master, Commanding.

Lieutenant-Commander SAMUEL MAGAW,
Senior Officer, Potomac Flotilla.

Report of Commodore Harwood, U. S. Navy, commanding Potomac Flotilla, regarding detention of messengers of the Army.

POTOMAC FLOTILLA,
COMMANDANT'S OFFICE, NAVY YARD,
Washington, July 15, 1863.

SIR: The *Teaser*, Acting Ensign Sheridan, arrived at the yard this morning, bringing with him three persons having passes from General Heintzelman's headquarters to cross within the lines and cross the lines of pickets upon important public business. They had also with them an order, a copy of which is herewith enclosed, from Captain S. L. Brown, acting quartermaster, office of forage and river transportation, to the captain of the steamer to land the men at the nearest port to Belle Plain.

This order, according to your instructions, could not be regarded by the officers of the flotilla, and the men were sent up by the commander of the *Dan Smith*, stationed at Quantico Creek.

Should they prove to be scouts from General Meade's army, as they represent themselves to be, I shall regret that they have been interrupted in the performance of their duties, and I have written to General Heintzelman to that effect, explaining to him at the same time that the orders from the Navy Department to the flotilla forbid any regard to be paid permits to land on the blockaded shore unless emanating from the Treasury, War, or Navy Departments.

I have the honor to be, with great respect, your obedient servant,

ANDW. A. HARWOOD,
Commodore, Commanding Potomac Flotilla.

Hon. GIDEON WELLES,
Secretary of the Navy.

[Enclosure.]

OFFICE OF FORAGE AND RIVER TRANSPORTATION,
Washington, D. C., July 13, 1863.

SIR: You will take E. McGee, Jack Tyson, and J. Hodges, who have passes from General Heintzelman, and land them at the nearest port to Belle Plain.

S. L. BROWN,
Captain and Acting Quartermaster.

CAPTAIN OF STEAMER JOHN WARNER.

Report of Acting Master Schulze, U. S. Navy, commanding U. S. S. Jacob Bell, regarding capture of contraband goods.

U. S. S. JACOB BELL,
Station H, July 15, 1863.

SIR: I have the honor to report to you that on the 13th of this month I landed near Union wharf, Rappahannock River, a force of 50 men, and captured the following contraband goods, etc., viz: Thirteen large flatboats (all engaged in blockade running), 32 barrels alcohol, 18 barrels whisky, 27 barrels (700 pounds) copperas, 14 barrels fine salt, 31 barrels soda, some rope, and machine belting.

These goods were scattered over a space of 5 square miles, and I had to destroy all of them for want of transportation. I have also captured

a large canoe (appropriated) and flatboat (destroyed), loaded with contraband goods, and have sent Acting Master's Mate R. [L.] Omensetter in charge of them with price lists to Washington.

Very respectfully,

G. C. SCHULZE,
Acting Master, Commanding.

Commodore A. A. HARWOOD,
Commanding Potomac Flotilla.

Capture of schooners Cassandra and Nanjemoy, July 11 and 15, 1863.

Report of Commodore Harwood, U. S. Navy, commanding Potomac Flotilla, transmitting certificates of capture of schooners Cassandra and Nanjemoy.

POTOMAC FLOTILLA,
Navy Yard, Washington, July 18, 1863.

SIR: The *Ella* arrived this morning and brought up the following-named persons:

Page Edmunds, Coan River; arrested while guarding contraband goods.

George B. Franklin; claims to belong to the Eleventh Pennsylvania Cavalry, Company G, taken prisoner and paroled; found on the Rappahannock River.

They have been turned over to the provost-marshal of the district.

I enclose certificates of capture of the schooner *Cassandra*, with a lot of whisky, etc., on board. She is now at Piney Point undergoing temporary repairs to enable her to be brought to this yard.

I also enclose certificate of capture of the schooner *Nanjemoy*, captured on the 15th instant. The wreck has arrived at this yard.

I have the honor to be, with great respect, your obedient servant,

ANDW. A. HARWOOD,
Commodore, Commanding Potomac Flotilla.

Hon. GIDEON WELLES,
Secretary of the Navy.

[Enclosures.]

Potomac Flotilla.—Certificate of capture.

Name and character of the prize.—Schooner *Cassandra*, an old vessel which bears marks of having been sunk for some time and raised for this occasion.

By whom and by what vessel capture made.—Acting Ensign J. W. Turner, U. S. S. *Yankee.*

When capture made.—July 11, 1863.

Where and for what reasons.—At Jones Point, Rappahannock River, Virginia, having on board a cargo of contraband goods.

The cargo, if any on board.—Sixteen and one-half barrels of whisky, and 74 kegs of soda.

What papers found.—None.

Remarks.—The *Cassandra* was on fire when captured.

JULY 11, 1863.

I hereby certify that the above-mentioned schooner and cargo were captured by the undersigned, commanding the U. S. S. *Yankee*, of the

Potomac Flotilla, at the time and place above designated, and that the above and annexed statement is true in every particular.

JAMES W. TURNER,
Acting Ensign, Commanding pro tem.

Potomac Flotilla.—Certificate of capture.

Name and character of the prize.—Schooner *Nanjemoy*, of Baltimore; dismantled, masts having been cut away.

By whom and by what vessel capture made.—Acting Ensign J. W. Turner, U. S. S. *Yankee.*

When capture made.—July 15, 1863.

Where and for what reasons.—In Coan River, Virginia, for having run a cargo of contraband goods into Coan River.

The cargo, if any on board.—None.

What papers found.—None.

Remarks.—The *Nanjemoy* was beached and filled with water, her cargo having been carried overland to the Rappahannock River.

JULY 15, 1863.

I hereby certify that the above-mentioned schooner was captured by the undersigned, commanding the U. S. S. *Yankee*, of the Potomac Flotilla, at the time and place above designated, and that the above and annexed statement is true in every particular.

JAMES W. TURNER,
Acting Ensign, Commanding pro tem.

Report of Lieutenant-Commander Magaw, U. S. Navy, commanding First Division Potomac Flotilla, regarding prize schooner Cassandra.

Semiofficial.] [U. S. S.] ELLA, *July 14, 1863.*

DEAR SIR: We have a prize, the schooner *Cassandra*, with whisky, soda, etc., but as the papers are not ready, I will not send her by the *Leslie.* She was taken on our late expedition up the Rappahannock. We also destroyed about $10,000 worth of contraband goods, which could not be transported to the beach. Full reports will go up with the prize.

I have the honor to be, your servant,

SAMUEL MAGAW,
Lieutenant-Commander, etc.

Commodore A. A. HARWOOD,
Commanding Navy Yard and Potomac Flotilla.

Report of Lieutenant-Commander Magaw, U. S. Navy, commanding First Division, Potomac Flotilla, giving further information regarding schooners Cassandra and Nanjemoy.

Semiofficial.] U. S. S. ELLA, *July 15, 1863.*

DEAR SIR: I send up by this vessel the schooners *Cassandra* and (what is left of) the *Nanjemoy.* Also a quantity of goods, which the accompanying reports will tell of.

It appears that the *Nanjemoy* cleared from Georgetown for Baltimore, was duly examined above, and had a pass. When passing the guard vessel at Piney Point she was leaking, and her cargo was such as one would call "carrying coals to Newcastle;" however, we could find no reason for her detention, and she was passed. The next day I

discovered she had gone into Coan River, Virginia. I sent the *Yankee* to communicate with the *Jacob Bell* and to intercept the goods in transit over the Rappahannock. The expedition was successful. After the return of the *Yankee* I sent her up the Coan to bring the *Nanjemoy* out, which she did, but the contrabandists had cut away her spars, etc. Mr. Turner, the acting ensign in charge of the *Yankee*, has displayed energy and good judgment. We have gotten fairly to work, and I hope to break up the trade. Very little has yet been attempted, but plenty of goods are in St. Mary's County ready for transit.

I have the honor to be, your servant,

SAML. MAGAW,
Lieutenant-Commander.

Commodore A. A. HARWOOD,
Commanding Navy Yard and Potomac Flotilla.

Report of Acting Ensign Turner, U. S. Navy, commanding U. S. S. Yankee, of the capture by that vessel of schooners Cassandra and Nanjemoy.

U. S. S. YANKEE,
Potomac Flotilla, July 16, 1863.

SIR: I have the honor to report that, having received information from Lieutenant-Commander Magaw, of a schooner having run into Coan River, Virginia, and having received orders from him to enter Coan River and seize schooner and goods if to be found, at 10:35 on the morning of the 10th instant, I proceeded to Coan River. Unfortunately we took the ground about a mile from the wharf, and with all our efforts failed to get the vessel off until 6:30 p. m. In the meantime I received reliable information that the goods had been carried across the country to the neighborhood of Union wharf, Rappahannock River, and also that the schooner *Nanjemoy* had been dismantled and beached. Finding that nothing could be done that evening, I returned to Piney Point, and related all the circumstances to Lieutenant-Commander Magaw, who immediately ordered me to the Rappahannock, where I proceeded with the utmost dispatch, and had the good fortune to capture the schooner *Cassandra*, with a large quantity of those very goods on board. The capture was not effected without difficulty, as the people in charge of her had set her on fire at our approach, starting several barrels of whisky in the hold, which carried the fire over her very rapidly.

As soon as possible I got on board of her with ten men and all the fire buckets I could muster, and after great exertion succeeded in getting the fire under. I found on board 16½ barrels of whisky and 74 kegs of soda; 2 of the barrels of whisky so badly charred, that they burst in the slings and were lost. Five or six kegs of soda were more or less damaged by water, and the schooner herself is old and comparatively worthless. The port she hailed from was painted out.

I can not close this report without making mention of the valuable assistance rendered to me by Acting Master's Mate Hiram C. Borden, of this vessel, and later by Acting Assistant Surgeon George B. Todd. The schooner *Cassandra* now lies at Point Lookout, as does the *Nanjemoy*, which I succeeded in bringing from Coan River yesterday in a dismantled state.

I have the honor to be, most respectfully, your obedient servant,

JAMES W. TURNER,
Acting Ensign, Commanding pro tem.

ANDW. A. HARWOOD,
Commodore, Commanding Potomac Flotilla.

Commendatory letter from Commodore Harwood, U. S. Navy, commanding Potomac Flotilla, to Lieutenant-Commander Magaw, U. S. Navy, commanding First Division.

JULY 18, 1863.

SIR: Your letter in relation to the operations of the flotilla, and especially to the captures of the schooners *Cassandra* and *Nanjemoy*, have been received.

The results are satisfactory, and evince commendable vigilance on the part of the flotilla.

I have also your letter, enclosing one from Acting Master Frank, in relation to Mr. Smoot's fugitive slaves. I return it with an endorsement.

The act of Congress referred to leaves no discretionary authority to officers, and I see no remedy for the owners of slaves but in an appeal through the civil authority.

Very respectfully, your obedient servant,

AND. A. HARWOOD,
Commodore, Commanding Potomac Flotilla.

Lieutenant-Commander SAMUEL MAGAW, etc.,
Potomac River.

Report of Commodore Harwood, U. S. Navy, commanding Potomac Flotilla, transmitting certificates of capture by U. S. S. Anacostia of blockade runners, July 16, 1863.

POTOMAC FLOTILLA,
Navy Yard, Washington, July 24, 1863.

SIR: I forward for the information of the Department a certificate of capture of a canoe and two persons named J. C. Hudson and C. B. Hudson, blockade runners, made by the U. S. S. *Anacostia*, Acting Master Provost, on the 16th instant. The particulars of this capture will be found in the certificate.

The money has been placed in the hands of the prize commissioners, and the prisoners sent to the provost-marshal.

I have the honor to be, with great respect, your obedient servant,

ANDW. A. HARWOOD,
Commodore, Commanding Potomac Flotilla,

Hon. GIDEON WELLES,
Secretary of the Navy.

[Enclosure.]

Potomac Flotilla.—Certificate of capture.

Name and character of the prize.—Canoe; prisoners: C. B. Hudson, J. C. Hudson.

By whom and by what vessel capture made.—J. H. Jackson, executive officer; U. S. S. *Anacostia.*

When capture made.—July 16, 1863.

Where and for what reasons.—Herring Creek, Md.; having crossed from Virginia in the night to get supplies.

The cargo, if any on board.—One box of tobacco, weighing 105 pounds; $73; several empty bags, jugs, etc.

What papers found.—Two lists of articles to be purchased.

Remarks.—Two men were taken prisoners in the canoe, named C. B. Hudson and J. C. Hudson; the latter had on his person $73 to purchase goods. The canoe broke up, and the bags, etc., were quite worthless.

JULY 16, 1863.

I hereby certify that the above-mentioned prize and prisoners were captured by the undersigned, commanding the U. S. S. *Anacostia*, of the Potomac Flotilla, at the time and place above designated, and that the above and annexed statement is true in every particular.

NELSON PROVOST,
Acting Master, Commanding.

Report of Commodore Harwood, U. S. Navy, commanding Potomac Flotilla, transmitting certificates of captures made by various vessels of his command.

POTOMAC FLOTILLA,
Navy Yard, Washington, July 20, 1863.

SIR: I forward for the information of the Department a certificate of capture made by the U. S. steamers *Jacob Bell*, *Satellite*, and *Yankee*, on the 13th instant, of one canoe, one flatboat, and a lot of merchandise near Union wharf, Rappahannock River.

I also forward certificate of capture of a lot of dry goods, shoes, etc., made by the U. S. steamers *Cœur de Lion* and *Primrose*, on the 17th instant, in Charles County, Md., for violating the blockade.

I have also to report that on the 18th instant the U. S. S. *Adolph Hugel* captured two men, giving their names John Burke and Thomas Martin, and a boy named John Martin, in a small boat, endeavoring to run whisky across the Potomac River into Alexandria, Va.

These persons have all been placed in the custody of Captain Todd, provost-marshal.

I have the honor to be, with great respect, your obedient servant,

ANDW. A. HARWOOD,
Commodore, Commanding Potomac Flotilla.

Hon. GIDEON WELLES,
Secretary of the Navy.

[Enclosures.]

Potomac Flotilla.—Certificate of capture.

Name and character of the prize.—Dry goods, shoes, etc.; John Thomas.

By whom and by what vessel capture made.—[Hugh] Jones, acting ensign, U. S. S. *Cœur de Lion;* Charles [A.] Stewart, master's mate, U. S. S. *Primrose.*

When capture made.—July 17, 1863.

Where and for what reasons.—Cuckold Creek, Charles County, Md.; for violating the blockade.

List of goods.—One case pipes, 2 cases, contents unknown; 1 case sterling, 2 boxes dry goods, 3 boxes sundries, 1 box carding combs, 6 boxes boots and shoes, 1 valise, sundries.

What papers found.—None.

Remarks.—The within goods and prisoner were captured, while en route to Virginia, in Charles County, Md. The goods were brought from Chaptico, at the head of the Wicomico River, by a party of men from Virginia. On our approach the men fled, but a few hours later took John Thomas, who acknowledged that he was one of the party, and came from Virginia to purchase.

JULY 17, 1863.

I hereby certify that the above-mentioned goods and prisoner were captured by the undersigned, commanding the U. S. steamers *Primrose* and *Cœur de Lion*, of the Potomac Flotilla, at the time and place above designated, and that the above and annexed statement is true in every particular.

WM. TELL STREET,
Acting Master, Commanding, and Senior Officer Present.

Potomac Flotilla.—Certificate of capture.

Name and character of the prize.—Canoe, no name, appropriated for the use of the flotilla; flatboat, no name, destroyed as useless.

By whom and by what vessel capture made.—U. S. S. *Jacob Bell*, U. S. S. *Satellite*, U. S. S. *Yankee*.

When capture made.—July 13, 1863.

Where and for what reasons.—Near Union wharf, Rappahannock River; running the blockade.

The cargo, if any on board.—Sixty-three barrels of soda, 19 barrels alcohol, 9 barrels whisky, 1 ton (2,000 pounds) copperas (more or less).

What papers found.—No papers found.

Remarks.—All these goods I have put on board the prize schooner *Nanjemoy* for transportation to Washington.

U. S. S. JACOB BELL, *July 16, 1863.*

I hereby certify that the above-mentioned canoe, flatboat, and contraband goods were captured by the undersigned, commanding the U. S. S. *Jacob Bell*, of the Potomac Flotilla, at the time and place above designated, and that the above and annexed statement is true in every particular.

G. C. SCHULZE.

Report of Acting Master Street, U. S. Navy, commanding U. S. S. Primrose, regarding expedition to Mattox Creek, Virginia, for the interception of smuggled goods.

U. S. S. PRIMROSE,
Station E, Potomac Flotilla, July 18, 1863.

SIR: I would respectfully report that in my several expeditions to Virginia during the last week, I learned from reliable persons there that a large quantity of goods were to be shipped from Cuckold Creek, Charles County, Md., to Mattox Creek, Virginia, and that persons had recently crossed over to purchase the same. I therefore sent the steamer *Cœur de Lion* to guard the creek. Yesterday Captain Jones reported that the goods had arrived, and would be taken to Virginia during the night. Proceeding to the above place in company with the *Cœur de Lion*, I ordered Captain [Hugh] Jones, at 5:30 p. m., with one boat from his vessel and my cutter, in charge of Master's Mate Charles [A.] Stewart, to go up the creek and search for the goods. At 12 p. m. the boats returned and reported that they found the goods on the farm of Mr. Z. Posey. The men who were with them had just loaded a large cart, drawn by a big yoke of oxen. Captain Jones called out to them to surrender, but in the darkness of the night they succeeded in escaping, although several shots were fired at them. Believing that there were still other goods in the vicinity, I again ordered the boats back to make

a further search. At 8 a. m. this morning the boats returned, not having found any goods, but brought Mr. Z. Posey and son, on whose place the goods were found, and who also owned the cart, but upon learning that the goods were brought upon the farm of Mr. Posey and the cart used by his servants without his knowledge, I let them go.

While the crews were returning this morning one of the men who made his escape last night, named John Thomas, was captured. He acknowledges that he is a resident of Virginia, and came over to Maryland to buy goods. I have sent the prisoner and goods in charge of Prize-Master Charles [A.] Stewart to Washington in the *Leslie*.

I am, with respect, your most obedient servant,

WM. TELL STREET,
Acting Master, Commanding.

Lieutenant-Commander SAMUEL MAGAW,
Senior Officer, Potomac Flotilla.

Attack upon U. S. transport George Peabody by Confederates at Mathias Point, Va., July 18, 1863.

[Telegram.]

NAVY YARD, WASHINGTON, *July 18, 1863.*
(Received at 7:50 p. m.)

I have just received information that the army transport *George Peabody* was ashore opposite Mathias Point. A party of rebel horse artillery opened fire from the heights just this side of the point with a battery of twelve guns. Paymaster Brayton, who was coming up in the *Keyport*, gave notice to the *Resolute* and the *Jacob Bell*, which proceded to the relief of the *Peabody* and would reach her in about three-quarters of an hour.

A. A. HARWOOD,
Commodore, Commanding.

Hon. G. WELLES,
Secretary of Navy.

[Telegram.]

NAVY YARD, WASHINGTON, *July 19, 1863—1 p. m.*

I have information from the *George Peabody*, now on shore above Mathias Point, up to 8 o'clock last night. At that time she was not off, although three of our gunboats were to attempt it at high water. They will remain there for protection. As the vessel went on at high water and light, it is probable that she can not float without lightening, which we can not do. Two canal boats as lighters, or to be used as camels, with a steamer, might effect the object. The enemy who attacked her yesterday have been driven off by our boats and the barn occupied by them as a shelter for guns and horses has been burned.

A. A. HARWOOD.

Brigadier-General MEIGS.

Report of Acting Master Schulze, U. S. Navy, commanding U. S. S. Jacob Bell.

U. S. S. JACOB BELL,
Off Mathias Point, July 20, 1863.

SIR: I have to report that on the 18th of this month the rebels opened with field artillery on the American steamer *George Peabody*,

then lying aground 2 miles above Mathias Point. Immediately after receiving this information, I got underway and was soon joined by the *Resolute*. In the meantime the U. S. S. *Racer* had been towed in position and opened fire upon the rebels; they immediately disappeared. I then landed a party of forty men. Eight cavalrymen, who guarded a barn with 1,100 barrels Confederate corn, fled as soon as our blue jackets made their appearance. I destroyed the barn and corn. The guns (two 10-pounder Parrott and two 12-pounder smoothbore) that fired upon the *Peabody* belong to the regular Confederate artillery, and are commanded by Captain Clayton [R. B. Claytor ?]; he has also forty mounted riflemen. They are now encamped 4 miles inland.

The rebels fired altogether eighteen shots; two of them struck the *Peabody*. Navigation was not stopped for a moment, and it is as safe for vessels to pass Mathias Point now as it was two months ago.

Very respectfuly, etc.,

G. C. SCHULZE,
Acting Master, Commanding.

Lieutenant-Commander S. MAGAW.

Report of Commodore Harwood, U. S. Navy, commanding Potomac Flotilla.

POTOMAC FLOTILLA,
Navy Yard, Washington, July 20, 1863.

SIR: On Saturday last the transport steamer *George Peabody*, while lying aground on Upper Cedar Point, was attacked by flying artillery from the Virginia shore. In my telegram of Saturday evening I stated that there were about twelve guns, but since then I have been reliably informed that there were but two.

The vessel was hit but once.

The gunboats *Jacob Bell*, *Resolute*, and *Teaser* have attempted to get the *Peabody* off, but have failed, as the vessel went on light and at high water. We shall be unable to get her off, and as she is liable to be again attacked by the enemy, it is to be hoped that the Quartermaster's Department will send down lighters to act as camels, which appears to be the only practicable way to remove her from her present dangerous position.

I have the honor to be, with great respect, your obedient servant,

ANDW. A. HARWOOD,
Commodore, Commanding Potomac Flotilla.

Hon. GIDEON WELLES,
Secretary of the Navy.

Report of Acting Ensign Jones, U. S. Navy, commanding U. S. S. Cœur de Lion, regarding captures of blockade runners.

U. S. S. CŒUR DE LION,
Potomac Flotilla, July 20, 1863.

SIR: Having heard that there were some contraband goods to be taken from Peter Waexall [Piccowaxton ?] Creek, Maryland, to Virginia, I proceeded to the above place and anchored. At 9 p. m. sent one of my boats to Cuckold Creek to look out that no boats should pass them. At

10:30 I hailed a boat supposed to be passing, and had to fire two rifle shots to bring her to. It proved to be a blockade runner by the name of Alexander Sherber, with two negroes. He had some provisions, a double-barrel gun, and a pair of saddlebags. He has told me he does not know anything about how or where he was going to, but said he was acquainted on shore. I proceeded on shore and found from Mr. Goodridge that he had run the blockade with a boat load of goods about ten days ago; also this morning at 9 a. m., I arrested John O. Hill, a soldier belonging to the First Maryland Regiment in the Southern Confederacy; also a man named W. Swing Carrick, supposed to be an agent in buying up goods to take to Richmond. I should like to know what I am to do with them. I have also a very large boat with muffled oars, taken with the first named person, A. Sherber.

I am, sir, very respectfully, your obedient servant,

HUGH JONES,
Acting Ensign, Commanding.

WM. T. STREET,
Acting Master, Commanding U. S. S. Primrose.

[Telegram.]

NAVY YARD, WASHINGTON, *July 20, 1863.*

I have sent orders to the remaining mortar vessels to be sent to the yard as soon as possible, to be fitted according to your dispatch. They are the schooners *Adolph Hugel*, *Dan Smith*, *Sophronia*, *Racer*. It is very important that the vessels intended for the flotilla at New York should be sent to the Potomac as soon as they can be spared, as the smugglers are active and two of the mortar vessels have been used as guard vessels, which must be replaced.

A. A. HARWOOD.

SECRETARY OF NAVY.

[Telegram.]

NAVY DEPARTMENT, *July 22, 1863.*

State names of the two mortar vessels going to Port Royal, [S. C.]

GIDEON WELLES,
Secretary of the Navy.

Commodore A. A. HARWOOD,
Commandant of Navy Yard, Washington, D. C.

[Telegram.]

NAVY YARD, WASHINGTON, *July 22, 1863—11:10 a. m.*

Two mortar vessels going to Port Royal are the *Racer* and *Dan Smith*. They have just arrived at the yard.

ANDW. A. HARWOOD,
Commodore, Commanding.

HON. SECRETARY OF THE NAVY.

Order of Acting Master Taylor, U. S. Navy, commanding U. S. schooner Sophronia, to Acting Master Street, U. S. Navy, commanding U. S. S. Primrose, to convoy steamer Detroit.

U. S. SCHOONER SOPHRONIA,
Piney Point, July 20, 1863.

SIR: You will immediately get underway and proceed up river as convoy to steamer *Detroit* until daylight, when you will leave her and return to this place and report to me.

The *Detroit* has 100 prisoners on board who are troublesome and are now making some show of revolt.

Very respectfully, your obedient servant,

JAMES TAYLOR,
Acting Master, Commanding U. S. Schooner Sophronia.

Acting Master STREET,
Commanding U. S. S. Primrose.

Report of Acting Master Phinney, U. S. Navy, commanding U. S. schooner Racer, regarding capture of blockade runners.

U. S. MORTAR SCHOONER RACER,
Station D, Potomac River, July 21, 1863.

SIR: I have to report that last night about 10 o'clock Acting Master's Mate H. C. Whitmore, with a boat's crew from this vessel, captured a boat with three men (two white and one colored), giving their names as Henry A. Suttle, Charles Cunningham, and Addison Marshall (colored), running the blockade from Virginia to Maryland. They stated they were going over to get supplies for their families. Nothing was found upon them except a small sum of money on each, which was given back to them. The boat was destroyed.

I am, sir, respectfully, your obedient servant,

ALVIN PHINNEY,
Acting Master, Commanding.

Commodore ANDREW A. HARWOOD,
Commanding Potomac Flotilla, Washington Navy Yard.

Report of Commodore Harwood, U. S. Navy, commanding Potomac Flotilla, transmitting certificates of captures made by U. S. steamers Currituck and Yankee, July 20, 21, and August 1, 1863.

POTOMAC FLOTILLA,
Navy Yard, Washington, August 3, 1863.

SIR: The *Resolute* arrived at the yard yesterday, bringing up a small sloop, the *Clara Ann*, containing some 40 barrels of whisky, captured by the *Yankee;* also some goods taken by the *Currituck.*

I enclose the certificates of capture of both the above-mentioned prizes.

I also enclose list of officers and crew of the *Yankee* at the time of the capture of the *Clara Ann.*

I have the honor to be, with great respect, your obedient servant,

ANDW. A. HARWOOD,
Commodore, Commanding Potomac Flotilla.

Hon. GIDEON WELLES,
Secretary of the Navy.

[Enclosures.]

Potomac Flotilla.—Certificate of capture.

Name and character of the prize.—Six barrels of whisky, 8 packages miscellaneous goods, 4 canoes.

By whom and by what vessel capture made.—U. S. S. *Currituck*, Acting Master T. J. Linnekin.

When capture made.—July 20 and 21, 1863.

Where and for what reasons.—Dividing Creek, Virginia, having run the blockade.

The cargo, if any on board.—[None.]

What papers found.—No papers.

Remarks.—Canoes were destroyed. These goods were found concealed in the woods, having been landed from canoes which had run the blockade.

RAPPAHANNOCK RIVER, *July 22, 1863.*

I hereby certify that the above mentioned articles of merchandise were captured by the undersigned, commanding the U. S. S. *Currituck*, of the Potomac Flotilla, at the time and place above designated, and that the above and annexed statement is true in every particular.

T. J. LINNEKIN,
Acting Master, Commanding.

Potomac Flotilla.—Certificate of capture.

Name and character of the prize.—*Clara Ann*, a sloop of 15 tons burden.

By whom and by what vessel capture made.—James W. Turner, U. S. S. *Yankee.*

When capture made.—August 1, 1863.

Where and for what reasons.—Coming out of Cove [Coan?] River, Virginia, and having on board a contraband cargo; also having her name concealed by a canvas cover.

The cargo, if any on board.—Forty barrels of whisky, 1 package of matches, 1 Colt's pistol.

What papers found.—A clearance from the port of Philadelphia to Washington, D. C.

Remarks.—The captain (whose name was reported to me as Purrell) had landed 6 barrels of whisky and escaped. I have taken a compass out of the prize for the use of this vessel. The following prisoners were captured on board the prize, viz: Charles Cooper, James McCormick, James Johnson, Thomas Wheeler, Peter Wheeler, John Brown.

AUGUST 1, 1863.

I hereby certify that the above-mentioned sloop was captured by the undersigned, commanding the U. S. S. *Yankee*, of the Potomac Flotilla, at the time and place above designated, and that the above and annexed statement is true in every particular.

JAMES W. TURNER,
Acting Ensign, Commanding pro tem.

*Letter from the Secretary of the Navy to Commodore Harwood, U. S. Navy, commanding Potomac Flotilla, transmitting telegram relative to Confederate naval expedition for the capture of boats on the Rappahannock River.**

NAVY DEPARTMENT, *July 24, 1863.*

SIR: I transmit herewith for your information a copy of a telegram of to-day's date received by Major-General Halleck from Major-General [R. C.] Schenck, commanding at Baltimore.

Very respectfully,

GIDEON WELLES,
Secretary of the Navy.

Commodore A. A. HARWOOD,
Commandant Navy Yard, Washington.

[Enclosure.—Telegram.]

BALTIMORE, *July 24, 1863.*

James Seeson, spy, from Richmond, reports that he passed at Old Church, on July 15, about 500 men, with six boats on wagons, who were going, as they said, to surprise gunboats on the Rappahannock.

ROBERT C. SCHENCK,
Major-General.

Major-General HALLECK,
General in Chief.

Report of Commodore Harwood, U. S. Navy, commanding Potomac Flotilla, regarding rumored movements of the enemy against gunboats in Rappahannock River.

POTOMAC FLOTILLA,
Navy Yard, Washington, July 25, 1863.

SIR: Immediately upon the receipt of your letter of yesterday, enclosing the copy of a telegram from General Schenck to General Halleck, the *King Philip* was dispatched down the river, to put the officers commanding the gunboats on the Rappahannock on their guard.

The *Satellite* and *Currituck* are at present stationed there, and if the instructions given to the commanding officers of the flotilla are properly observed, there is very little danger to be apprehended from attacks by boats.

I have the honor to be, with great respect, your obedient servant,

ANDW. A. HARWOOD,
Commodore, Commanding Potomac Flotilla.

Hon. GIDEON WELLES,
Secretary of the Navy.

Report of Commodore Harwood, U. S. Navy, commanding Potomac Flotilla, regarding disposition of refugees.

POTOMAC FLOTILLA,
Navy Yard, Washington, July 25, 1863.

SIR: The instructions of the Department relative to the blockade of the Virginia shore, and the caution contained in its letter† of the 24th

---

*See capture of U. S. Steamers *Satellite* and *Reliance*, August 23, 1863. It is learned from unofficial sources that this expedition was recalled by order from the Secretary of the C. S. Navy, when it had arrived at Old Church, and did not start again till August 12, 1863.—COMPILERS.

†See p. 261.

of April in reference to refugees, obliges me to make the Department aware of the embarrassment the officers of the flotilla are exposed to in the present state of things.

Refugees are constantly crossing the Potomac in canoes, sometimes endeavoring to avoid our vessels and sometimes coming directly to them, thinking by so doing to insure a speedy passage to Washington.

While our troops were in the neighborhood all such persons were turned over to them, but the cases can no longer be disposed of in that way. Flags of truce are also frequently displayed on the Virginia shore, which generally turn out to have been raised by parties who desire to be taken off.

The letter of the Department, referred to above, expresses the opinion that the persons described as refugees "should be received with great caution, as many of them are acting as spies." There can be no doubt of the soundness of this view, and I can see no remedy for the difficulty but in establishing a military post, where all refugees can be sent and their true character critically examined before they are permitted to go farther.

I have the honor to be, with great respect, your obedient servant,

ANDW. A. HARWOOD,
Commodore, Commanding Potomac Flotilla.

Hon. GIDEON WELLES,
Secretary of the Navy.

Order of the Secretary of the Navy to Commodore Harwood, U. S. Navy, commanding Potomac Flotilla, regarding refugees.

NAVY DEPARTMENT, *July 29, 1863.*

SIR: I have received your letter of the 25th instant in reference to refugees.

This subject is involved in some difficulty, requiring nice discrimination in order to do justice to loyal citizens and yet avoid imposition. At this time, when the rebel leaders are imposing a general draft, there are many undoubtedly fleeing from the conscription. Navy officers on blockade duty can not receive and sustain all these, and yet I am aware it is hard to compel them to remain in the rebel region, in many instances.

I am, respectfully,

GIDEON WELLES,
Secretary of the Navy.

Commodore A. A. HARWOOD,
Commandant Navy Yard, Washington.

Report of Commodore Harwood, U. S. Navy, commanding Potomac Flotilla, regarding refugees.

POTOMAC FLOTILLA,
Navy Yard, Washington, July 30, 1863.

SIR: I have received your reply of the 29th instant to my (flotilla) letter, No. 285, in relation to refugees.

I beg leave to say that the instructions given hitherto by the Department have been so definite that the officers of the flotilla will hardly venture to assume the responsibility of allowing persons whose loyalty they are not positively assured of to cross the river. Many have succeeded and more will succeed in getting over, and I would recommend

that arrangements should be made with the military authorities that all who are apprehended may be examined and such disposition be made of them as circumstances may require.

I understand that there is to be a depot of prisoners at Point Lookout. If so, refugees might be sent there by the flotilla to be examined and disposed of.

Obviously, if great discrimination be not observed, spies will come among those who are leaving Virginia to escape the draft, and the provost-marshal should be made aware of the advantages afforded to spies by the turn affairs have taken.

I perceive by the Baltimore American of this morning that many of the refugees who have reached the Maryland shore have taken passage in the *Keyport* to Baltimore. If this be the case, the embarrassment of the officers of the flotilla will be somewhat lessened, but it will not be the less necessary that there should be some party stationed at Piney Point to see that improper persons are not mixed up with the apparently destitute.

I have the honor to be, with great respect, your obedient servant,

ANDW. A. HARWOOD,
Commodore, Commanding Potomac Flotilla.

Hon. GIDEON WELLES,
Secretary of the Navy.

[Enclosure.]

From the Baltimore American, July 30, 1863.

Refugees from the South.—At an early hour yesterday morning 72 women and children appeared at the Gilmer House and stated that they were refugees from the South. They reached here in the steamers *Keyport* and *Planter*, and their appearance indicated not only want but general destitution. Some of their statements, showing what they had suffered, were calculated to touch the hardest heart, and much sympathy was expressed for them. Happily, they are now in the enjoyment of such comforts as warm friends are enabled to bestow.

Report of Acting Ensign Jones, U. S. Navy, commanding U. S. S. Cœur de Lion, of the capture by that vessel of a party of blockade runners.

U. S. S. CŒUR DE LION,
Lower Cedar Point, Md., July 27, 1863.

SIR: I have the honor to report the capture of a boat with the following-named persons crossing to Virginia: Mr. George D. Ashton, wife, and child; Miss H. Ashton, Mr. Robert Kendall; also one colored man. I received information on shore that this same party landed on the Maryland shore last Friday, the 24th, with the intention of seeing some of their friends; also of taking some goods back with them on their return. I also understand from some negroes on shore that the goods were intended for Dr. Todd, but he did not succeed in getting them in time for shipment. They have sundry small articles, such as calico, soda, sugar, etc. The boat I left at Blakistone Island.

Very respectfully, your obedient servant,

HUGH JONES,
Acting Ensign, Commanding.

Commodore A. A. HARWOOD,
Commanding, etc.

[Telegram.]

NAVY DEPARTMENT, *July 28, 1863—12 m.*

Acting Assistant Paymaster Kirkendall has just arrived and will attend to the accounts immediately. Heavy firing was heard yesterday in the direction of the gunboats stationed near the Rappahannock River. Give the boats orders to blockade that river, but not to ascend it except by your orders.

GIDEON WELLES,
Secretary of the Navy.

Commodore HARWOOD.

Report of Commodore Harwood, U. S. Navy, commanding Potomac Flotilla, of the capture, by U. S. S. Teaser, of two men in Mattawoman Creek.

POTOMAC FLOTILLA,
Navy Yard, Washington, July 30, 1863.

SIR: I have to report the arrival at this yard of the U. S. S. *Resolute*, with two persons, namely, James Harrison and Robert Bland, captured with a boat by the U. S. S. *Teaser*, on the night of the 27th instant, in Mattawoman Creek, with a small quantity of loose tobacco.

The boat has been destroyed, and the prisoners placed in the custody of the provost-marshal.

I have the honor to be, with great respect, your obedient servant,

ANDW. A. HARWOOD,
Commodore, Commanding Potomac Flotilla.

Hon. GIDEON WELLES,
Secretary of the Navy.

[Telegram.]

NAVY DEPARTMENT, *July 31, 1863.*

Point Lookout having been designated as a depot for rebel soldiers captured by our forces, you will direct a sufficient naval force to be always in close vicinity and in communication with the senior Army officer at that point.

GIDEON WELLES,
Secretary of the Navy.

Commodore A. A. HARWOOD,
Commandant Navy Yard, Washington.

Report of Lieutenant-Commander Magaw, U. S. Navy, commanding First Division Potomac Flotilla, regarding affairs in the Rappahannock River.

Semiofficial.]

U. S. S. ELLA,
Piney Point, August 1, 1863.

DEAR SIR: I send up the *Resolute* with a prize captured by the *Yankee* this morning, with an officer to make affidavit and the necessary papers.

Acting Assistant Paymaster Clarke goes up for funds, and also to make affidavit with regard to goods captured by the *Currituck* that are on board the *Resolute*.

There is no news from the Rappahannock. The *Satellite* and *Reliance* are there, with strict orders as to vigilance.

The enemy has now a regiment of cavalry—Georgian, I think—on the neck, that perhaps numbers 400 men, cut up into squads of 10 to 15. They have made no demonstration as yet against us in the Rappahannock.

So much of your order as relates to ascending the Rappahannock as far as Fort Lowry I hope will be rescinded, and, if necessary, I will accompany any expedition that I may desire to send.

We often hear of goods passing the Potomac, and our only way to capture is to intercept them as they cross the Rappahannock. This we have done in several cases, but can not now, with the present order in force. There is no point where the enemy can make an attack on us below Fort Lowry with a fair chance of doing us material [injury] without artillery, as the river is broad up to that point.

Very respectfully, your obedient servant,

SAMUEL MAGAW,
Lieutenant-Commander, etc.

Commodore A. A. HARWOOD,
Commanding Potomac Flotilla.

Report of Commodore Harwood, U. S. Navy, commanding Potomac Flotilla, regarding affairs in the Rappahannock River.

POTOMAC FLOTILLA,
Navy Yard, Washington, August 3, 1863.

SIR: The force at the mouth of the Rappahannock is as large as the number of effective vessels in the flotilla will permit, namely the *Satellite*, *Currituck*, and *Reliance*. Two are generally present at a time within supporting distance, with strict orders as to vigilance, and the third on its way to take in coal.

Lieutenant-Commander Magaw reports that on the northern neck or peninsula, between the Potomac and Rappahannock rivers, the enemy has now a regiment of cavalry (Georgia, he thinks) numbering about 400 men, divided into squads. I have information from reliable sources that there is an organized band of contrabandists whose chain of communication extends from the Patuxent to the Rappahannock. The cavalry party is no doubt used to escort them. The operations in the Patuxent should be looked into. I am told that there is a company of Hebrews near Lower Cedar Point, who have wagons, bringing goods across, which are kept concealed in the woods until a favorable opportunity occurs of running them across the Potomac.

Lieutenant-Commander Magaw writes that the only way to capture these goods is to intercept them on the Rappahannock if we miss them on the Potomac, and asks me to modify my order forbidding vessels of the flotilla to ascend the Rappahannock, so as to allow them to go up as far as Fort Lowry. He offers to accompany any expedition that may go up the river, to see that it is conducted prudently. As the instructions came from the Department, I do not feel authorized to sanction any change.

No demonstration has as yet been made on the flotilla in the Rappahannock.

I have the honor to be, with great respect, your obedient servant,

ANDW. A. HARWOOD,
Commodore, Commanding Potomac Flotilla.

Hon. GIDEON WELLES,
Secretary of the Navy.

Order of the Secretary of the Navy to Commodore Harwood, U. S. Navy, commanding Potomac Flotilla, regarding expedition up the Rappahannock River.

NAVY DEPARTMENT, *August 5, 1863.*

SIR: Your communication No. 294, dated the 3d instant, has been received. The Department authorizes you to order an expedition up the Rappahannock under Lieutenant-Commander Magaw for this special time.

Very respectfully, etc.,

GIDEON WELLES,
Secretary of the Navy.

Commodore A. A. HARWOOD,
Commandant Navy Yard, Washington, D. C.

[Telegram.]

EASTVILLE, VA., *August 5, 1863.*
(Received at Washington 8:30 a. m.)

A party of eight or nine armed men appeared on Smith's Island on Monday the 3d instant and completely gutted the light-house, carrying away the lamps, reflectors, and everything else belonging to the establishment, and broke every glass. They threaten to destroy Hog Island and Cherrystone lights. My life is in danger, as well as all the Government property on the island. They are encamped on the island.

WM. W. STATE,
Light-House Keeper.

LIGHT-HOUSE BOARD,
Washington.

Letter from Commodore Harwood, U. S. Navy, commanding Potomac Flotilla, to Lieutenant-Commander Magaw, U. S. Navy, commanding First and Second Divisions, suggesting expedition up the Rappahannock River.

AUGUST 7, 1863.

SIR: In reply to your letter, extracts of which I sent to the Department, I forward to you a copy of the reply.

By it you will see that you are authorized to make an expedition up the Rappahannock. I do not, however, consider this as an order to go, but I leave the matter entirely at your discretion.

I hope one day next week to go down the river to visit the different vessels of my command and I shall look for you at Blakistone Island or at Piney Point.

Coal has been ordered for the station at Piney Point and I trust that it will arrive at seasonable intervals so as to keep down the demurrage bills.

I retain the *Ella* to accompany me on my cruise.

Very respectfully, your obedient servant,

AND. A. HARWOOD,
Commodore, Commanding Potomac Flotilla.

Lieutenant-Commander SAMUEL MAGAW,
Commanding First and Second Divisions Potomac Flotilla.

Letter from Commodore Harwood, U. S. Navy, commanding Potomac Flotilla, to Major-General Heintzelman, U. S. Army, regarding authorized permits to vessels.

POTOMAC FLOTILLA, *August 8, 1863.*

GENERAL: Several passes from your headquarters have been presented to me signed by one of your aids, subject to my approval, for fishermen within the lines of the Army, and one for a schooner wishing to take a cargo of lumber from the Maryland shore to New York.

I have informed all these persons that every part of the Virginia shore is interdicted excepting that of Alexandria, and that for regular traffic it is necessary to obtain a custom-house permit, and then apply on board of guard vessel for the regular naval Potomac pass, which the commander has been instructed to furnish to all applicants having regular papers. To prevent misconception and in some cases delay injurious to the service, I beg leave to inform you that commanding officers of the vessels belonging to the Potomac Flotilla are instructed to enforce the blockade in the most rigid manner, and are forbidden to pay any regard to what are called permits from any officer, except the Secretaries of the Treasury, War, or Navy. In all cases, therefore, when you may deem it necessary to communicate with any portion of the Virginia shore not in the possession of our troops, but within the limits of my command (which includes the Potomac, Rappahannock, and Piankatank rivers), it will be best to obtain the necessary authority from the Navy through the War Department. The order once given from the proper source, you may depend upon the most ready furtherance of your wishes on the part of those under my command.

I am, general, very respectfully, your obedient servant,

ANDW. A. HARWOOD,
Commodore, Commanding Navy Yard and Potomac Flotilla.

Major-General S. P. HEINTZELMAN,
U. S. Army, Commanding the Defenses of Washington.

Order of the Secretary of the Navy to Commodore Harwood, U. S. Navy, commanding Potomac Flotilla, regarding tour of inspection.

NAVY DEPARTMENT, *August 10, 1863.*

SIR: The Department approves of your proposed tour of inspection to the Potomac Flotilla, as indicated in your No. 296, and authorizes you while embarked to hoist the distinctive pennant of commodore.

Very respectfully, etc.,

GIDEON WELLES,
Secretary of the Navy.

Commodore A. A. HARWOOD,
Commanding Potomac Flotilla, Washington.

Order of the Secretary of the Navy to Commodore Harwood, U. S. Navy, commanding Potomac Flotilla, regarding refugees.

NAVY DEPARTMENT, *August 13, 1863.*

SIR: You will direct that hereafter no refugees, or persons representing themselves as such, be received on board the vessels of the Potomac Flotilla, unless they are willing to take the oath of allegiance, which they must do as soon as received on board, and that foreigners be received on board in no case whatever.

Very respectfully, etc.,

GIDEON WELLES,
Secretary of the Navy.

Commodore A. A. HARWOOD,
Commanding Potomac Flotilla, Washington.

Letter from Lieutenant-Commander de Krafft, U. S. Navy, to Commodore Harwood, U. S. Navy, commanding Potomac Flotilla, transmitting information of a movement of the enemy across the Rappahannock River.

AUGUST 15, 1863.

COMMODORE: I send the *Eureka*, Acting Ensign Brice, with dispatches; also a few officers who wish to join their vessels.

A copy of the enclosed telegram from the Secretary of the Navy has been forwarded to Captains Magaw and Ives; also instructions given to Acting Ensign Brice to notify each vessel as he proceeds down the river, and report to you for further orders.

There is no pressure at the yard; all goes on as usual, smoothly and quietly.

Very respectfully, your obedient servant,

J. C. P. DE KRAFFT,
Lieutenant-Commander, Navy Yard.

Commodore A. A. HARWOOD,
Commanding Potomac Flotilla.

[Enclosure.—Telegram.]

NAVY DEPARTMENT, *August 15, 1863.*

It is reported that a regiment of cavalry, with a battery of artillery, has crossed the Rappahannock and may attempt to make trouble on the Potomac.

GIDEON WELLES,
Secretary of the Navy.

Commodore A. A. HARWOOD,
Commandant Navy Yard, Washington.

Report of Acting Master Street, U. S. Navy, commanding U. S. S. Primrose, regarding reported movements of the enemy.

U. S. S. PRIMROSE,
Station E, Potomac Flotilla, August 17, 1863.

SIR: Having received information that a regiment of cavalry and a battery of artillery were on their way to the Potomac, I this morning got underway and cruised along the Virginia shore from Nomini Bay to near Mathias Point, but have not seen or heard anything of them.

On my way up, I landed at White Point and took off three men, deserters from the Fifteenth Virginia Cavalry. They state that their regiment left Fredericksburg on Thursday and moved toward Chancellorsville, and that there are no cavalry in the northern neck below Aquia Creek. I put them on an army transport bound to Washington.

On my way down I landed at Rosier's Creek, and found the people both here and at White Point had seen nothing of any forces in their neighborhood.

I am, sir, very respectfully, your obedient servant,

WM. TELL STREET,
Acting Master, Commanding.

Commodore A. A. HARWOOD,
Commanding Potomac Flotilla.

Report of Lieutenant-Commander de Krafft, U. S. Navy, of the arrest of two blockade runners.

POTOMAC FLOTILLA,
Navy Yard, Washington, August 17, 1863.

SIR: I have to report, for the information of the Department, the arrest of James Gray, of Virginia, and William W. Purdy, of Charles County, Md.

James Gray came from Dumfries, Va., and was arrested in Charles County, Md., buying up goods at the various stores around Mattawoman Creek for transmission to the rebels.

William W. Purdy is accused of running the blockade and landing a load of goods in Virginia three weeks ago, and returning to Maryland in company with William Surly, a blockade runner. These men have been placed in the custody of the provost-marshal.

I have the honor to be, with great respect, your obedient servant,

J. C. P. DE KRAFFT,
Lieutenant-Commander, for Commodore, Comdg. Potomac Flotilla.

Hon. GIDEON WELLES,
Secretary of the Navy.

Report of Lieutenant-Commander de Krafft, U. S. Navy, of the arrival of prisoners at Washington navy yard.

POTOMAC FLOTILLA,
Navy Yard, Washington, August 17, 1863.

SIR: I have to report, for the information of the Department, the arrival at this yard of John M. George, William P. George, Zamuth George, all of Lancaster County, Va.; and also John Robbins, Ninth Virginia (rebel) Cavalry, arrested by order of Acting Master T. J. Linnekin, commanding the U. S. S. *Currituck*, on the 11th instant. These men are accused of cutting down the trees on Windmill Point, a well-known landmark on the Chesapeake Bay. They are also reported as violent secessionists, and exceedingly active in preventing the escape of deserters from the rebel Army, as well as harassing Union people and others favorable to the Federal cause.

The prisoners have been placed, with the necessary information, in custody of the provost-marshal.

I have the honor to be, with great respect,

J. C. P. DE KRAFFT,
Lieutenant-Commander, for Commodore, Comdg. Potomac Flotilla.

Hon. GIDEON WELLES,
Secretary of the Navy.

General report of Commodore Harwood, U. S. Navy, commanding Potomac Flotilla.

POTOMAC FLOTILLA,
Navy Yard, Washington, August 19, 1863.

SIR: I have the honor to report my return from a visit of inspection to the Potomac Flotilla, during which both stations and vessels were examined as far as the mouth of the Piankatank River.

I found the officers generally on the alert and the condition of the vessels, in point of order and discipline, as good as the nature of the service and its material could have led me to expect.

I regret to state that in consequence either of the actual or approaching expiration of the time of so many men, the efforts of the flotilla will be materially crippled until the force can be recruited.

Smuggling is still carried on to a considerable extent, chiefly in canoes and small boats, not risking much at a time, and thus increasing the chances of success in running the blockade. The approach of the steamers is generally known in time to avoid them, and the best chance of apprehending the contrabandists is by rowing guard, which requires full crews for the vessels engaged in the blockade.

Your telegram of the 15th, in relation to the expected interruption of the navigation of the river by the rebel cavalry and artillery, was received on the evening of the 16th. Measures were immediately taken to secure the safe passage of vessels at the points where they would be most subject to attack, and communication was had with the shore for the purpose of obtaining information in relation to the numbers and position of the cavalry.

Nothing more, however, is known at present than the fact that there is a small force on the peninsula, and that their rendezvous is probably at Hampstead, between Aquia Creek and Mathias Point, about 2 miles inland. A spy was dispatched by Lieutenant-Commander Magaw to ascertain this fact, but had not returned when I left Indian Head.

There was no appearance of hostile troops, either in passing up or down the river. Instructions, however, have been given to the guard vessels to warn all transports, going or coming, to keep the Maryland shore on board as much as possible.

I send the latest Richmond papers, taken from a mail carrier who was captured by the *Jacob Bell*, and also a few letters containing rebel description of the battle of Gettysburg.

I have the honor to be, with great respect, your obedient servant,

ANDW. A. HARWOOD,
Commodore, Commanding Potomac Flotilla.

Hon. GIDEON WELLES,
Secretary of the Navy, Navy Department.

Letter from Commodore Harwood, U. S. Navy, commanding Potomac Flotilla, to Rear-Admiral Shubrick, U. S. Navy, chairman Light-House Board, suggesting a guard of soldiers for each light vessel.

AUGUST 19, 1863.

SIR: In reply to your letter of the 15th instant, I beg leave to state that the Potomac is as well guarded as the number of gunboats now under my command will admit, and that at night either the vessels or boats from them are constantly patrolling the river in the vicinity of both Upper and Lower Cedar Points.

I ought to inform you, however, that my force is liable to be diminished at particular points in order to reenforce other squadrons for a time or to cooperate with the Army or for indispensable repairs. I would therefore suggest that a guard of soldiers should be placed on each light vessel.

Whenever the new light vessels are reported in position I will send instructions to the vessels of the flotilla to keep a vigilant watch over them at night.

I have the honor to be, very respectfully, your obedient servant,

ANDW. A. HARWOOD,
Commodore, Commanding Potomac Flotilla.

Rear-Admiral W. B. SHUBRICK, U. S. Navy,
Chairman Light-House Board.

Report of Commodore Harwood, U. S. Navy, commanding Potomac Flotilla, transferring reports and certificate of captures of blockade runners.

POTOMAC FLOTILLA,
Navy Yard, Washington, August 21, 1863.

SIR I have to report for the information of the Department the capture by the flotilla of Richard P. Rose, of the Fifty-fifth Virginia (rebel) Regiment, captured in Lancaster County, Va., the 18th instant.

I have also to report the capture of Benjamin F. Welles, of Fredericksburg, Va., the former owner of the U. S. S. *Eureka*.

The enclosed copy of a letter from Acting Master T. J. Linnekin contains further information in regard to the capture of Mr. Welles.

Henry O. Emerson and J. C. Athey were also captured, with a small quantity of goods referred to in the enclosed certificate of capture, by the U. S. S. *Cœur de Lion* on the 22d instant.

John Summers and Herman Boenigker, who report themselves as deserters from the Fourth Virginia Cavalry, were captured crossing the Potomac on a raft on the 19th instant.

I also enclose certificate of capture of the schooner *Three Brothers*, made by the U. S. S. *Satellite* in the Great Wicomico River on the 17th instant.

These men have been placed in custody of the provost-marshal, and the schooner and goods transferred to the prize commissioners.

I have the honor to be, with great respect, your obedient servant,

ANDW. A. HARWOOD,
Commodore, Commanding Potomac Flotilla.

Hon. GIDEON WELLES,
Secretary of Navy.

[Enclosures.]

U. S. S. CURRITUCK,
Off Windmill Point, August 22, 1863.

SIR: I forward to you the following-named prisoner, Benjamin F. Welles, of Fredericksburg, Va., the former owner of the U. S. S. *Eureka*, concerning whom I report as follows, viz:

Mr. Welles was captured on Totouskey Creek, Rappahannock River, the 21st instant, engaged in running grain and blockade goods to Fredericksburg. In answer to questions put to him he said that such men as he became desperate after losing all they had.

I also report that this vessel and the *Satellite* destroyed the ferry at Union wharf, which consisted of two large scows and a few canoes. One of the scows was new, and had on board a load of cattle, which she was taking across the river, but upon our appearance in sight and a shell being thrown from the *Satellite* they put back, and the men and the cattle escaped in the woods.

Very respectfully, your obedient servant,

T. J. LINNEKIN,
Acting Master, Commanding.

Lieutenant-Commander SAML. MAGAW,
Potomac Flotilla.

U. S. S. CŒUR DE LION, *August 22, 1863.*

SIR: I have the honor to report the capture of two men this morning, named Henry O. Emerson and J. C. Athey, attempting to run the blockade into Virginia under the following circumstances:

At 6 a. m. a boat was reported pulling close down the Virginia shore. My two boats being away from the vessel on guard duty, I immediately got the steamer underway and started in chase. The boat in the meantime continued pulling for the shore, trying to escape, but a shell from our forward gun soon brought them to, and we succeeded in capturing them. They state that they left Alexandria, bound to Aquia Creek, and from thence to Richmond, where they had business. We captured some medicines, hats, pins, and sewing silk, valued at $84, which I have made out a prize list for, and send up by the *Teaser* this morning, in charge of Acting Master's Mate James G. Burnett. The men captured appear to be very intelligent, and there is reason to believe that they had other business in the rebel capital besides trafficking contraband goods.

Very respectfully, your obedient servant,

W. G. MORRIS,
Acting Master, Commanding.

Commodore A. A. HARWOOD,
Commanding Potomac Flotilla, Washington.

Potomac Flotilla.—Certificate of capture.

Name and character of the prize.—Schooner *Three Brothers.*

By whom and by what vessel capture made.—J. F. D. Robinson, acting master, commanding U. S. S. *Satellite.*

When capture made.—August 17, 1863.

Where and for what reasons.—Great Wicomico River; for being in blockaded waters.

The cargo, if any on board.—None.

What papers found.—None.

Remarks.—Captured for being in blockaded waters.

AUGUST 17, 1863.

I hereby certify that the above-mentioned schooner was captured by the undersigned, commanding the U. S. S. *Satellite*, of the Potomac Flotilla, at the time and place above designated, and that the above and annexed statement is true in every particular.

J. F. D. ROBINSON,
Acting Master, Commanding.

Report of Commodore Harwood, U. S. Navy, commanding Potomac Flotilla, regarding capture of schooner Golden Leaf.

POTOMAC FLOTILLA,
Navy Yard, Washington, August 27, 1863.

SIR: I enclose for the information of the Department certificate of capture of schooner *Golden Leaf*, made on the 23d instant by the U. S. S. *Jacob Bell*, Acting Master G. C. Schulze commanding, for a violation of the blockade, by running into Rosier's Creek, Virginia, and landing a few contraband goods, consisting of sugar, etc.

The *Golden Leaf* when captured had on board five deserters from Stuart's rebel cavalry, who were turned over to the deputy provost-marshal of Charles County, Md.

The captain of the vessel, J. H. Sebastian, has been placed in custody of the provost-marshal of this district, and the prize schooner, which arrived to-day, has been placed in charge of the prize commissioners.

I have the honor to be, with great respect, your obedient servant,

ANDW. A. HARWOOD,
Commodore, Commanding Potomac Flotilla.

Hon. GIDEON WELLES,
Secretary of the Navy.

Capture of U. S. steamers Satellite and Reliance, August 23, 1863.

Report of Lieutenant-Commander Magaw, U. S. Navy, commanding First and Second Divisions, Potomac Flotilla.

Unofficial.]

U. S. S. DRAGON,
Friday Evening, August 26, 1863.

MY DEAR SIR: I send this vessel up with the news of the capture of the *Satellite* and *Reliance*, and enclose for your satisfaction my orders* to the vessels at the mouths of the Piankatank and Rappahannock, to guard against surprise. There is some mystery attached to the capture of these vessels, or the most disgraceful neglect of duty I have ever heard of. Anything more I hear of the affair I will let you know. Please give me permission to go up the Rappahannock and make an examination as far as Port Tobacco.

---

*Not found.

The *Jacob Bell* broke down last night, or I should have been tempted to have gone up the river to-day.

Yours, very respectfully,

SAML. MAGAW,
Lieutenant-Commander.

Commodore HARWOOD.

Report of Lieutenant-Commander Magaw, U. S. Navy, commanding First Division, Potomac Flotilla, transmitting statement of William D. Spillman, esq.

U. S. S. DRAGON,
Chesapeake Bay, August 28, 1863.

SIR: I have the honor to report that upon entering the Rappahannock this morning neither the *Satellite* nor *Reliance* were at their station. Report says they have been captured by boarding by the enemy and carried up the river. I enclose a statement of a Mr. Spillman.

The *Freeborn*, *Jacob Bell*, *Currituck*, and *Tulip* remain at the mouth of the Rappahannock until further orders.

Very respectfully, your obedient servant,

SAML. MAGAW,
Lieutenant-Commander.

Commodore A. A. HARWOOD,
Commanding Potomac Flotilla.

[Enclosure.]

Statement of William D. Spillman.

I saw a man named Clarke, who jumped overboard and swam ashore from the steamer *Satellite*, who said that one boat containing about 25 men boarded her, alongside, and another with the same number of men, over the bow. There were seven men on watch, who were immediately overpowered. The crew made some resistance. He himself fired seven shots, but when he saw the boat was taken, he jumped overboard. There were 6 men wounded on both sides. The captain of the *Reliance* (which was attacked by two more boats at the same time) was slightly wounded.

After the capture, which was between 12 and 1 o'clock Saturday night, the steamers both went up the river. The *Satellite* came down Monday and Tuesday about dusk; also Wednesday about sunset.

The four boats, containing about 100 men, came out of the Piankatank River; among them were 3 men, who came on board the *Satellite* at Urbana to sell chickens. While on board they learned where the ammunition, small arms, etc., were kept, so that on Saturday night as soon as they boarded the *Satellite* they seized these the first thing.

Yesterday afternoon heard heavy firing in the Piankatank (which, from his description, I should judge to be the *Commodore Jones*, Captain Linnekin).

Tuesday the *Satellite* captured 2 schooners of about 60 tons each, which had put in here for a harbor, and towed them up the river; both were loaded deep.

The report here is that the rebels have about 1,000 cavalry, cruising about through Middlesex County.

The man Clarke was captured Sunday night, on Windmill Point, by 4 or 5 cavalrymen.

WINDMILL POINT, *August 28, 1863.*

This statement was made in my presence by William Spillman, whom we brought off from Windmill Point this morning, which I believe to be as correct as could be gathered from the reports he has heard. I can not vouch for his loyalty; his family have been doing washing for our officers for some time.

T. J. LINNEKIN,
Acting Master, Commanding U. S. S. Currituck.

[Telegram.]

NAVY YARD, WASHINGTON, *August 28, 1863—6 a. m.*
(Received 6:30 a. m.)

Acting Volunteer Lieutenant Ives has just arrived and reports as follows:

That he learns from Mr. Edward, of Cockle's Creek, Virginia, that the steamers *Satellite* and *Reliance* were captured on Saturday night near the mouth of the Rappahannock River; that Acting Master Robinson was mortally wounded, died the next day; that a naval officer in the neighborhood of Cockle's Creek, at home on a furlough, states that when he left Richmond, he heard of this expedition being ready to attack the boats on the Rappahannock; from the same source, the steamers are said to be staying in the mouth of the river, awaiting to surprise other vessels of the flotilla. Lieutenant-Commander Magaw has gone with a sufficient force (five vessels) to recapture the vessels if they are there and the story is true. He will send his fastest boat, and that as soon as anything definite is known. Special orders have been given to prepare for surprise, and to clear out if considerable force should appear, and fight underway. I think therefore the story is false.

A. A. HARWOOD,
Commodore.

Hon. GIDEON WELLES,
Secretary of the Navy.

[Telegram.]

NAVY YARD, WASHINGTON, *August 29, 1863.*
(Received at Washington 10:10 a. m.)

I regret to inform the Department that the news of the capture of the *Satellite* and *Reliance* is confirmed. I attribute it, from what I hear, to disobedience and neglect.

A. A. HARWOOD,
Commodore, Commanding.

Hon. SECRETARY OF THE NAVY.

Report of Commodore Harwood, U. S. Navy, commanding Potomac Flotilla.

POTOMAC FLOTILLA.
Navy Yard, Washington, August 29, 1863.

SIR: I enclose herewith the copy of the report* of Lieutenant-Commander Samuel Magaw, confirming the rumor (sent by telegram to the Department on the 27th instant) that the *Satellite* and *Reliance* had been taken by surprise by the enemy's boats.

---

* See preceding pages.

The statement of Mr. Spillman, referred to in the letter, was left by me in the hands of Mr. Fox this morning.

I enclose also an unofficial note of Lieutenant-Commander Magaw on the same subject, and a copy of the report of Acting Master Linnekin to Lieutenant-Commander Magaw, which will prove to the Department that in addition to the instructions printed for the guidance of the officers of the flotilla and the repeated cautions to be on the alert, there were special directions given to the commanders of the *Satellite* and *Reliance* in view of the contingency which took place.

I have the honor to be, with great respect, your obedient servant,

ANDW. A. HARWOOD,
Commodore, Commanding Potomac Flotilla.

Hon. GIDEON WELLES,
Secretary of the Navy.

[Enclosure.]

U. S. S. CURRITUCK,
Station H, Rappahannock River, August 28, 1863.

SIR: I beg leave to make the following statement in regard to precautionary measures ordered to prevent surprise on this station, viz:

First. That the boats should anchor at the mouth of the river, near the middle, in supporting distance of each other.

Second. That the chain should be unshackled at 15 fathoms, with a tail rope and buoy attached to the chain, in order to slip cable at any moment.

Third. That the officer of the deck, on the appearance of any boat, should ring the bell to go ahead, at the same time call all hands, until the character of the boat may be ascertained.

Very respectfully, your obedient servant,

T. J. LINNEKIN,
Acting Master, Commanding.

Lieutenant-Commander SAMUEL MAGAW, etc.,
Potomac Flotilla.

[Telegram in cipher.]

NAVY DEPARTMENT, *August 29, 1863.*

Send the *Sangamon* with sealed orders to the mouth of the Rappahannock to await further orders. Let her leave after dusk, and no one beside yourself to know her destination. She must be ready for action. Answer in cipher.

GIDEON WELLES,
Secretary of Navy.

Captain GUERT GANSEVOORT,
Senior Officer, U. S. Navy, off Newport News, Va.

[Telegram.]

NAVY YARD, *August 29, 1863—1:25 p. m.*

We can carry 12 feet as high as Port Royal [Va.].

A. A. HARWOOD,
Commandant.

Hon. G. V. FOX.

Order of Commodore Harwood, U. S. Navy, commanding Potomac Flotilla, to Acting Master Provost, U. S. Navy, commanding U. S. S. Anacostia.

AUGUST 29, 1863.

SIR: On the completion of the repairs upon your vessel you will proceed without delay to the mouth of the Rappahannock River and await further orders, keeping a vigilant lookout for boarders.

Very respectfully, your obedient servant,

AND. A. HARWOOD,
Commodore, Commanding Potomac Flotilla.

Acting Master NELSON PROVOST,
Commanding U. S. S. Anacostia.

[Telegram.]

NAVY YARD, *August 29, 1863—4:20 p. m.*

It is desirable that I should have the information you promised to send me before I leave the yard to-night. Please reply.

A. A. HARWOOD.

Hon. G. V. FOX.

[Telegram.]

NAVY DEPARTMENT, *August 30, 1863.*

If no other orders are received, return the ironclad to her station immediately on her return down the river. She must not be separated from the other force, nor precede the vessels in ascending on account of torpedoes.

GIDEON WELLES.

Commodore HARWOOD,
Washington, D. C.

Report of Commodore Harwood, U. S. Navy, commanding Potomac Flotilla, regarding movements in the Rappahannock River.

SANGAMON, *off Tappahannock, August 31, [1863].*

MY DEAR SIR: We are abreast of the town—3:55 p. m.—and draw too much water to go any higher with this vessel. I have sounded ahead, nearly full tide, with an easterly wind. We have an experienced pilot, who is of opinion that we can not go farther up than a quarter of a mile, and as the bottom in some places is hard, I deem it imprudent to proceed farther.

We have not seen any vessels so far of any kind, and only a few horsemen.

I shall await your further instructions, and can only say I am much disappointed in not being able to reach Port Royal, [Va.], but as the tides are as full as I can expect them to be, there is small hope of that.

I thought you ought to know this at once, that you might make the army people aware of the state of things.

Yours, truly,

ANDW. A. HARWOOD,
Commodore, Commanding Potomac Flotilla.

Hon. G. V. FOX,
Assistant Secretary of the Navy.

Order of the Secretary of the Navy to Commodore Harwood, U. S. Navy, commanding Potomac Flotilla, transmitting telegram from Major-General Meade, U. S. Army, promising cooperation.

NAVY DEPARTMENT, *September 1, 1863.*

SIR: Enclosed herewith is the dispatch of Major-General Meade, promising cooperation with your movement. If it is possible to get a force up to Port Royal to communicate with this force it should be done; otherwise, return and send the *Sangamon* to Newport News, leaving a sufficient number of vessels to guard the mouth of the Rappahannock.

Very respectfully,

G. V. FOX,
Acting Secretary of Navy.

Commodore A. A. HARWOOD,
Commandant Navy Yard, Washington, D. C.

[Enclosure.—Telegram.]

HEADQUARTERS ARMY OF THE POTOMAC, *August 30, 1863.*
(Received 10:40 p. m.)

In accordance with your instructions I have directed Brigadier-General Kilpatrick, with his division of cavalry, about 2,000 strong, and two batteries of artillery, to proceed to Port Conway [Va.], opposite Port Royal, and endeavor to destroy the captured gunboats if practicable.

To protect his rear and afford him support Brigadier-General Buford, with a brigade of cavalry and a battery, will hold the crossing at Falmouth [Rappahannock River], and Major-General Warren, with the Second Corps, about 5,000 infantry, will hold the crossings at Banks' and United States fords.

I have not much expectation of success, however, for it is known the enemy have a division of infantry at Fredericksburg and a brigade of cavalry, also a division of infantry at Port Royal, with a brigade on this side at Port Conway.

What I anticipate is that Kilpatrick will find the gunboats above Port Royal, where they can not be reached by our naval forces, and in a position where the enemy's artillery, posted on the right bank, will prevent his bringing his batteries to bear on their destruction. The great distance of Port Conway, 25 miles below Falmouth, the extreme point of our cavalry picket, and the necessity of Kilpatrick awaiting the arrival of the infantry, may prevent his reaching his destination before day after to-morrow.

GEORGE G. MEADE,
Major-General, Commanding.

Maj. Gen. H. W. HALLECK,
General in Chief.

Letter from Brigadier-General Kilpatrick, U. S. Army, to Lieutenant-Colonel Smith, U. S. Army, regarding the attempt to destroy the steamers Satellite and Reliance.

HEADQUARTERS THIRD CAVALRY DIVISION,
[*September*] *2*, [*1863*]—*8 a. m.*

The enemy have abandoned the boats. Elder has riddled the *Satellite*. She is fast sinking. The *Reliance* is receiving a heavy fire from

both batteries. I can not effectually destroy the boats. If the ironclad was here both boats could be recaptured. I shall encamp to-night near Lamb's Creek church.

J. KILPATRICK,
Brigadier-General.

Lieutenant-Colonel C. ROSS SMITH,
Chief of Staff.

[Telegram.]

HEADQUARTERS ARMY OF THE POTOMAC,
September 3, 1863—noon. (Received 12:30 p. m.)

The following dispatch was received from General Kilpatrick this morning. General Kilpatrick and the infantry force sent for his support have been withdrawn, and the former picket line down the river to Falmouth, and thence across to Potomac Creek, will be reoccupied.

GEO. G. MEADE,
Major-General.

Major-General HALLECK.

HEADQUARTERS THIRD DIVISION, *September 2, 1863—2 p. m.*

I have just returned with my command to Lamb's Creek church, where I shall encamp for the night. I could not totally destroy the gunboats, but have rendered them about worthless. I waited at Port Conway till 11 a. m. for the ironclad. It failing to make its appearance, and the enemy having opened with a battery of heavy artillery, I deemed it useless to remain longer. Unless I receive orders to the contrary, I shall return to-morrow morning.

J. KILPATRICK,
Brigadier-General.

Lieutenant-Colonel SMITH,
Chief of Staff.

Report of Commodore Harwood, U. S. Navy, commanding Potomac Flotilla, of the expedition up the Rappahannock River for the purpose of destroying the captured steamers Satellite and Reliance.

POTOMAC FLOTILLA,
Navy Yard, Washington, September 3, 1863.

SIR: I have the honor to submit the following memoranda of my recent trip to the Rappahannock for the purpose of cooperating with the land forces in the destruction of the gunboats *Satellite* and *Reliance*, recently captured and taken up that river by the rebels.

On Sunday, the 30th ultimo, left the yard in the *Ella* at 3:15 p. m., and arrived at Windmill Point at the mouth of the Rappahannock at 5:30 a. m. on Monday, the 31st ultimo. There I found the *Sangamon* (ironclad), the *Commodore Jones*, and *Commodore Morris*, of Acting Rear-Admiral Lee's squadron, and the *Currituck*, *J. Bell*, *Dragon*, and *Tulip*, of the Potomac Flotilla. At 6:15 got underway in the *Sangamon* and steamed up the river with the following vessels in company: *Dragon* (alongside), the *Commodore Morris*, and *Jacob Bell*. At 1:30 passed Fort Lowry, found the battery deserted and neither enemy nor guns in sight. At 2:15 anchored a short distance above the wharf at Tappahannock, the pilot being of the opinion that we could not go higher. Sent the *Dragon* up to sound. The report being unfavorable to further progress, waited until high water and sent Lieutenant-Commander Magaw in the *Dragon* to sound again. The report was that there were 11½ feet of water. Lightened ship by putting on board the two ferry-boats nearly all the 11 and 15 inch shot.

Tuesday, September 1, underway at 5:30 a. m., and after proceeding about 500 yards above our anchorage got aground. Being unable to get the vessel off before the tide had fallen, brought the *Commodore Morris* and *Jones* alongside and took out all the coal (about 50 tons).

At 11:15 the *Jacob Bell* arrived from below, bringing the telegram of the Department of the 30th ultimo.

At 11:45 dispatched her to Point Lookout, with orders to the *Anacostia* to go to Piney Point, and for herself to remain at Point Lookout and protect the vessels and depot for prisoners, the *Yankee* being broken down.

At meridian the *Freeborn* arrived, having a coal schooner in tow, with about 100 tons of coal. 1:40 p. m., by the aid of the *Dragon*, *Commodore Morris*, and *Jones*, got the *Sangamon* off.

At 3 p. m. steamed down the river and anchored at 7 p. m. at Bowlers Rocks. *Commodore Jones* and *Morris* were brought alongside, and the shot which had been taken out returned to the *Sangamon*.

Wednesday, September 2, underway at 5 a. m. At 6 a. m. the *Ella* met us at Carter's wharf with dispatches (letter of Department of the 1st instant and copy of General Meade's dispatch to General Halleck of the 31st ultimo).

At 8:15 sent the *Commodore Jones* to Yorktown. Left the *Sangamon* off Mosquito Point, and sent her to Newport News in tow of the *Commodore Morris*.

At 10 a. m. went on board the *Currituck* and gave instructions to Lieutenant-Commander Magaw in reference to the blockade of the river, and also to look out in case our cavalry should come down the peninsula to afford them assistance. At 11:30 returned to the *Ella*. At 2:30 arrived at Point Lookout, and had a conference with Brigadier-General Marston in relation to the prisoners of war confined at that point.

Thursday, 3d of September, arrived at the navy yard.

I inclose herewith the soundings we took in the neighborhood of Tappahannock, those on the charts not giving of course the soundings at full tide.

I ought here to observe that the first pilot I consulted told me he thought we could get to Port Royal in a vessel drawing 12 feet, but referred me to Mr. Price as the best pilot attached to the flotilla. On my way down I took Mr. Price on board, who was not sanguine, but willing to try. The result is known, but it should be observed that the *Sangamon* was full of stores and ammunition, and the tides low, as they usually are at this season.

All the vessels of the flotilla received an additional warning to be on the alert.

The *Yankee* being not only disabled in her machinery, but short handed, and the *Eureka* having broken her shaft, I have ordered both to the yard.

So many of the men in the flotilla have either served their time or have nearly done so, that I shall be obliged to withdraw some of the most assailable vessels from exposed situations unless the crews are recruited. It would be imprudent from this cause to send the store vessel *Wyandank* down the river to remain.

I have the honor to be, very respectfully, your obedient servant,

ANDW. A. HARWOOD,
Commodore, Commanding Potomac Flotilla.

Hon. G. V. FOX,
Acting Secretary of the Navy.

Report of Lieutenant Weidman, U. S. Navy, commanding, U. S. S. Sangamon, of expedition up the Rappahannock River.

U. S. STEAM IRONCLAD SANGAMON,
Off Newport News, James River, September 3, 1863.

SIR: In accordance with orders received on the evening of the 29th of August, this vessel was placed in as good condition as the nature of the repairs then proceeding would admit, and by 8 p. m. the vessel was underway steaming toward Fortress Monroe.

On my way to the fortress I was overhauled at 9 p. m. by the tug sent by you, and in charge of Lieutenant Merchant, from whom I received sealed orders, with directions on the back to open when past Willoughby's Spit light. Followed my directions, and found my destination to be the mouth of the Rappahannock River, there to report to Commodore Harwood for duty.

In consequence of the pilot refusing to take the responsibility of piloting the vessel during the night, and the sea in the bay being very high, I anchored at midnight about three-fourths of a mile E.S.E. of the light-boat.

At daylight on the 30th got underway and proceeded to my destination, arriving there at 5 p. m. Not finding Commodore Harwood at this point, I remained at anchor until the next morning, the 31st of August, when he arrived, and, according to directions, got underway, and, with the commodore aboard, taking the lead of the flotilla, and proceeded up the river. Arrived opposite a town called Tappahannock at 2:30 p. m., about 70 miles from the mouth of the river, where the pilot informed the commodore that he doubted his ability to proceed farther, and we anchored. The commodore sent the pilot through the doubtful part of the channel, and finding very near 2 fathoms through its entire length, he determined to make an effort to proceed up the river after lightening her somewhat (the vessel then drawing 2 fathoms).

During the night I placed aboard the *Commodore Morris* and the *Commodore Jones* 75 XV-inch shot and 115 XI-inch shot.

The next morning (September 1) at 5:15, the tide having reached its extreme rise, the attempt was made to get beyond this point, but failed, not having gone over 400 yards from our anchorage before grounding in 11 feet water.

The vessel was steaming very slowly, with barely steerage way upon her, and no possible injury could have resulted from this circumstance. The bottom was soft mud, with a crust of oyster shells on top.

Remained aground until the next flood tide, engaged in discharging coal into the gunboats accompanying us. At 1:40, with the assistance of the *Commodore Morris*, succeeded in getting her afloat. Shortly afterwards, while going down the stream, going very slowly, she grounded again in 11 feet water, but we soon got her off, with the assistance of the *Commodore Jones*, and anchored.

At 3 p. m. we got underway, and with the tugboat *Dragon* towing alongside proceeded down the river. We arrived at the mouth of the river at 9 a. m. (September 2).

Commodore Harwood here took leave of the vessel, giving me instructions to proceed to my old station, which were executed with due haste, the *Commodore Morris* towing as far as Fortress Monroe, arriving there after dark.

I arrived at Newport News on the morning of the 3d at 9:30 a. m. and reported.

Very respectfully, your obedient servant,

JOHN WEIDMAN,
Lieutenant.

Captain GANSEVOORT,
Senior Officer Present.

Report of Acting Master Street, U. S. Navy, commanding U. S. S. Primrose, giving information received from deserters regarding steamers Satellite and Reliance.

U. S. S. PRIMROSE,
Off Piney Point, Md., September 4, 1863.

SIR: I would respectfully report that as I was on my way down the river this morning, I took off, under a flag of truce, from Mathias Point, Va., two deserters from the *Patrick Henry* (rebel receiving ship on James River) named George Hart and William Murray. They state that they were detached with others to haul the machinery of the *Satellite* and *Reliance* from the Rappahannock to Richmond, but on their arrival at Port Royal [Va.] they deserted and that the machinery of the *Reliance* had been all taken on shore, together with the guns. On Tuesday night three regiments of cavalry and four pieces of artillery arrived at Port Conway, and on Wednesday morning they opened upon the *Satellite*, lying a half mile below Port Royal, and just after they (the rebels) had commenced to take the engine apart. They informed me that both the engine and boiler were destroyed, and the vessel greatly damaged by the shot from our battery. There was at the time one gun's crew on the *Satellite*, but they took to the shore. There are but 300 infantry at Port Royal, with three guns taken from the vessels, and to the best of their knowledge there are no batteries on the river below that point. The cavalry were yesterday encamped at King George Court-House.

I am, sir, your obedient servant,

WM. TELL STREET,
Acting Master, Commanding.

Lieutenant-Commander SAMUEL MAGAW,
Senior Officer, Potomac Flotilla.

Report of Commodore Harwood, U. S. Navy, commanding Potomac Flotilla, regarding the death of Boatswain's Mate Tye.

POTOMAC FLOTILLA,
Navy Yard, Washington, September 5, 1863.

SIR: In the capture of the *Satellite*, which was so discreditable to the service, Jack Tye, boatswain's mate, was wounded at his post in the attempt to ring the bell (the signal to go ahead) and has since died of his wounds. He was buried at Point Lookout with the respect due to his long and faithful service and to his reputation as a true seaman.

Though beyond the reach either of censure or praise, I have thought it right to do justice to his memory and to express my belief that if there had been a few more of his tried worth on board the *Satellite* she

would not have been taken. He was considered the best petty officer in the flotilla.

I have the honor to be, very respectfully, your obedient servant,

ANDW. A. HARWOOD,
Commodore, Commanding Potomac Flotilla.

Hon. GUS. V. FOX,
Acting Secretary of the Navy.

Report of Acting Ensign Sommers, U. S. Navy, late U. S. S. Satellite, regarding the capture of that vessel by the enemy.

POTOMAC FLOTILLA,
Navy Yard, Washington, September 8, 1863.

SIR: Having received permission from the Department to report for examination as an acting ensign, I was examined and passed the board in February last, on the Potomac River, when I was transferred from the mortar schooner *Dan Smith* to the U. S. S. *Satellite*. Between 12 and 1 o'clock a. m. on 23d of August last, while lying near the mouth of the Rappahannock River, our vessel (the *Satellite*) was boarded by two armed boats numbering 35 men. Before reaching the vessel they were hailed by the officer of the deck (Acting Master's Mate Foulk [Fogg], when he received answer "*Commodore Morris.*" Mr. Foulk [Fogg] came forward; calling me he said we were being boarded. I directed him to call all hands to repel boarders, which he did. Immediately I seized my cutlass and pistol; I stepped on deck; my attention was attracted to the noise aft. Still, thinking the noise was made by our own men, before I could reach the quarter-deck (in which direction I was going), I received a shot in my neck. The boarders, observing that I was armed, attacked me with their cutlasses, and, being closely pressed, I freely used my pistol as a slung shot, during which time I received three cuts over my arm, when, being overpowered, I was placed in my room with a sentry over me. Just previous to being conducted forward I heard the captain surrender the vessel. We were then taken up the river, all under guard, arriving at Urbana about 7 o'clock the same morning. Remaining in Urbana three days, I was then paroled and took passage on board the U. S. S. *Currituck*.

Owing to my wounds, the weakness of my condition prevented me from making an earlier report in writing or person.

Hoping the above statement may meet all requirements and give satisfaction, I have the honor to remain, sir, most respectfully, your obedient servant,

RUDOLPH SOMMERS,
Acting Ensign, U. S. Navy.

Hon. GIDEON WELLES, *Secretary of the Navy.*

Report of Commodore Harwood, U. S. Navy, commanding Potomac Flotilla, transmitting list of officers of U. S. steamers Satellite and Reliance.

POTOMAC FLOTILLA,
Navy Yard, Washington, September 9, 1863.

SIR: In compliance with your letter of the 8th instant, I enclose a list of the officers belonging to the *Reliance* and *Satellite* at the time of their capture.

I have the honor to be, very respectfully, your obedient servant,

ANDW. A. HARWOOD,
Commodore, Commanding Potomac Flotilla.

Hon. G. V. FOX, *Acting Secretary of the Navy.*

[Enclosure.]

List of the officers attached to the U. S. S. Satellite at date of capture.

John F. D. Robinson, acting master, commanding.
Rudolph Sommers, acting ensign, wounded and in Washington.
Isaac Johnson, acting second assistant engineer.
Christopher McCormick, acting third assistant engineer.
John Mee, acting third assistant engineer.
William H. Fogg, acting master's mate.
Charles H. McLellan, acting master's mate, on leave of absence at date of capture.
N. H. Stavey, paymaster's steward, discharged.
John F. Henry, surgeon's steward.

List of officers attached to the U. S. S. Reliance at date of capture.

Henry Walters, acting ensign, commanding, wounded and down the river.
James McCaulley, acting second assistant engineer.
Alexander [D.] Renshaw, acting third assistant engineer.
Thomas Brown, acting master's mate.
Samuel Lomax, pilot.
Henry L. Mangan, paymaster's steward.

Order of the Secretary of the Navy to Commodore Harwood, U. S. Navy, commanding Potomac Flotilla.

NAVY DEPARTMENT, *September 11, 1863.*

SIR: You will be pleased to inform the Department who was the executive officer of the U. S. S. *Reliance* (fourth rate), and designate those who were captured in both the *Satellite* and *Reliance.*

Very respectfully,

GIDEON WELLES,
Secretary of the Navy

Commodore A. A. HARWOOD, U. S. Navy,
Commanding U. S. Naval Station, Washington.

Report of Commodore Harwood, U. S. Navy, commanding Potomac Flotilla, giving name of executive officer of U. S. S. Satellite at time of capture.

SEPTEMBER 12, 1863.

SIR: In compliance with the directions in the letter of the Department of the 11th inst., I have to report that at the time of the capture of the *Reliance* (fourth rate) her executive officer was Acting Master's Mate Thomas Brown.

I enclose herewith a duplicate of the list of the officers captured in the *Reliance* and *Satellite*, forwarded in flotilla letter No. 323.

I have the honor to be, with great respect, your obedient servant,

ANDW. A. HARWOOD,
Commodore, Commanding Potomac Flotilla.

Hon. GIDEON WELLES,
Secretary of the Navy.

Report of a board of officers appointed to investigate the facts connected with the loss of the U. S. steamers Satellite and Reliance.

U. S. S. ELLA,
Potomac Flotilla, September 25, 1863.

SIR: In accordance with your order to investigate the facts connected with the loss of the U. S. steamers *Satellite* and *Reliance*, we beg leave to submit the following report, which, although not complete, is as full

as we are able to make it on account of the absence of many of the officers and men belonging to the above vessels, viz:

That both vessels were anchored on the night of the 22d August last about the middle of the Rappahannock River, at its mouth, in about 7 fathoms of water, as was the custom at that time, and about 200 yards apart, the third vessel on that station being absent for the purpose of getting coal.

The night was dark and stormy; that each vessel was attacked by two boats, containing about twenty men each.

The *Satellite* was surrendered but the *Reliance* was not, as all the men were either killed or wounded or secured by the boarders, and that the resistance was so great that Lieutenant Wood, the rebel in command of the boarding party, being apprehensive of a more prolonged struggle, and seeing that the contest still continued on the *Reliance*, sent a third boat to assist the two already there. Both vessels were short-handed, but the resistance on board the *Sattellite* appears to have been very slight, while that of the *Reliance* was much more prolonged. The enemy gained the deck of the *Satellite* without firing a shot, but were fired upon from the *Reliance* at about 30 feet from the vessel.

Rebel Lieutenant Wood's orders were to board at the bows and shoot down all who were forward, which was done, thus preventing the cable being slipped, as was the standing order on board the *Reliance* in case of an attack.

Acting Ensign Walters, commanding the *Reliance*, was severely wounded early in the engagement, but made his way to the pilot house and rang the bell to go ahead and blew the whistle for assistance, not knowing the *Satellite* was captured.

All the enemy who were wounded were those who boarded the *Reliance*.

The orders of the commanding officer of the *Reliance* from the commanding officer of the *Satellite* were to anchor near that vessel during the night.

After the capture of the vessels they were taken to Urbana, Va., and after the prisoners were robbed, they were put on shore at that place.

The wounded were kindly cared for by persons in Urbana.

The vessels under the command of Rebel Lieutenant Wood went down the river for the purpose of capturing the U. S. S. *Currituck*, but she not making her appearance, they captured three schooners. Hearing a heavy force was coming to recapture the vessels they took them up to Port Royal, where they were dismantled.

We have the honor to be, very respectfully, your obedient servants,

THOS. POYNTON IVES,
Acting Volunteer Lieutenant, etc.
J. H. ELDRIDGE,
Acting Master, Commanding.
G. E. MCCONNELL,
Acting Ensign.

Commodore A. A. HARWOOD,
Commanding Potomac Flotilla.

Instructions of the Secretary of the Navy to Rear-Admiral Goldsborough, U. S. Navy, president naval court of enquiry.

NAVY DEPARTMENT, *October 21, 1863.*

SIR: Upon the conclusion of the enquiry in which the court of which you are president is now engaged, the court is hereby authorized and

directed to take anew the oaths prescribed by law for the purpose of investigating the circumstances attending the capture of the U. S. steamers *Satellite* and *Reliance* by rebel forces in the Rappahannock River on or about the 22d day of August, in the year 1863.

The court will diligently and thoroughly make the enquiry hereby directed, and will report to the Department the material facts which they deem to be established by the evidence; and if in their opinion the facts show negligence or other fault on the part of any person or persons in the naval service the court will report the names of such person or persons and the nature of the misconduct.

I transmit herewith, for the information of the court, a letter,* with enclosure in relation to the capture of the steamers *Reliance* and *Satellite*, from the commandant of the Potomac Flotilla, dated September 30, 1863.

I am, respectfully, your obedient servant,

GIDEON WELLES,
Secretary of the Navy.

Rear-Admiral L. M. GOLDSBOROUGH, U. S. Navy,
President Naval Court of Enquiry, Washington, D. C.

Findings and opinions of the court of enquiry in the case of the loss of the U. S. steamers Satellite and Reliance.

Material facts in the case of the Reliance.

The material facts in the case of the capture of the U. S. S. *Reliance*, which the court deem established by the evidence are:

On the 17th November, 1862, Commodore Harwood, commandant of the Potomac Flotilla, received information through the Secretary of the Navy that the rebels designed to surprise and capture some of the United States steamers in the waters of Virginia. On the same date Commodore Harwood caused this information to be transmitted to all commanding officers to be on their guard against surprise, and in addition general instructions were issued to commanding and other officers of the Potomac Flotilla in a printed pamphlet to the same effect.

On July 24, 1863, another communication was received from the Navy Department by Commodore Harwood, informing him that information had reached the War Department through a spy that 500 men were seen at the old church on July 15 with 6 boats on wagons, going, as they said, to surprise gunboats on the Rappahannock.

This information was immediately dispatched by Commodore Harwood to Lieutenant-Commander Magaw, senior officer afloat of the flotilla, and on the day following sent another order to the same officer, directing word to be sent to the officers commanding the gunboats at the mouth of the Rappahannock to keep within supporting distance of each other and to blockade the river and not to ascend it without his orders. Lieutenant-Commander Magaw acknowledged the receipt of this information, and replied he had sent it to the vessels on the Rappahannock.

In addition to these orders, Acting Volunteer Lieutenant Ives, acting fleet captain of the flotilla, during the early part of the month of last August, while at Piney Point, Md., warned officially the commanding officer of the *Reliance*, Acting Ensign Walters, and the commanding

---

*Not found.

officer of the *Satellite*, Acting Master Robinson, to be very vigilant and to keep a lookout against those people who they all knew were coming to attack them.

This information communicated by the War Department was known generally by the officers and men on both of the vessels captured.

On the morning of the 23d of August, 1863, about twenty minutes past 12 o'clock, as U. S. steamers *Reliance* and *Satellite* lay anchored in 5 fathoms water near the mouth of the Rappahannock River, at Butler's Hole, about midway between Windmill and Stingray points and 1¼ miles from the nearest land and about 200 yards apart, within hail by the whistle, a party of rebels, consisting of Lieutenant Hoge and Midshipman Cooke, with about 40 men, in 2 boats of ten oars each, double banked, was seen approaching the *Reliance* at about 75 yards distance by the lookout forward, and were at once hailed by him. They made no answer, but still approached. They were hailed the second time by the same lookout, and then answered "Putnam." The lookout sang out if they approached he would fire upon them. By this time Anthony Spisenger, who was with the lookout aft, and who was in charge of the watch, came forward, and when, after being hailed the third time and when about ten yards from the *Reliance*, he discharged his rifle at them.

The lookout, Hand, immediately ran aft, arousing the crew and officers, and crying out "Rebel boarders." In the meantime some of the enemy had climbed over the boarding nettings and were on deck, and others were cutting their way through them.

A fight here ensued between the boarders and James Watson, Anthony Spisenger, John Hand, and a rebel deserter who stood at the bitts of the cable. Several rifles and pistols were fired by either side and the deserter was wounded.

By the time this ended the crew were awakened and on deck.

Henry Walters, commander of the *Reliance*, jumped from his hammock, which was swung over the quarter-deck and ran forward and sang out to the man at the bitts to slip the cable. On his way forward he was shot at, but the ball missed him. He received a stroke across the hand with a cutlass. Not finding the man slipping the cable, who had been wounded, he cried out again to him to slip the cable, when he was again shot at, the ball striking him in the abdomen and passing out of his back. In a few moments he became exhausted, and fell or sat on the pilot-house steps, when he determined to endeavor to blow the whistle for assistance from the *Satellite*. He did blow the whistle once, when, as he says, he fell exhausted on his knees.

In the meantime the enemy were capturing one by one the crew, and some desultory firing, without order or command, was still carried on by the men of the *Reliance*. Thomas Brown, acting master's mate and executive officer, was, in the early part of the attack, awakened, and as soon as he came out of the cabin went forward on the starboard side, passing within 4 or 5 feet of the arms chest without arming himself, until he reached the engine-room door, where he cried out several times to the enemy that he surrendered, making no resistance at any time during the attack, and surrendering himself when the fighting had almost just begun. He was after his surrender placed in the fire room as a prisoner.

Alexander [D.] Renshaw, third assistant engineer, almost immediately upon his awaking, took refuge below the floor of the engine room, where he remained until Daniel J. Cole, a first-class fireman, surrendered, when he came up and also surrendered himself.

James McCaulley, second assistant engineer, senior engineer aboard, was not in the engine room during the engagement, and is not known to have taken any part in the fight, except perhaps he may have endeavored, with Henry L. Mangan, paymaster's steward, to train the quarter-deck howitzer, nor is Henry L. Mangan known to have taken any other part in the defense of the vessel.

While these officers and men were performing the parts just related, the fighting still continued by James Welch, Spisenger, James Rowbottom, and perhaps another, when a third boat of the same size as the first two boarded the *Reliance* on the port side, being a reenforcement from the enemy. The few remaining untaken men, meeting with this reenforcement and being but two or three, were overpowered, but did not formally surrender.

Resistance being over, the crew were mostly ironed, and the enemy took the positions assigned them, their engineer taking possession of the engine room, their pilot in the pilot house, and quartermaster at the bow on the lookout, with spyglass in hand. The wounded, who consisted on the part of the *Reliance* of Henry Walters, acting ensign commanding, the rebel deserter, and James Welch, and on the part of the enemy, Lieutenant Hoge, Midshipman Cooke, and two of the crew, were all properly cared for. The next morning the two vessels, at 7 o'clock, were off Urbana, where the crews of the *Reliance* and *Satellite* were landed, and with the exception of the wounded were all marched from thence to Richmond. The crew were, in six weeks' time, paroled; the officers when last heard from were still in prison.

At the time of the surprise, the *Reliance* was anchored in about 5 fathoms water, and a mile and a quarter from land. There was plenty of room, so that it was entirely practicable for her to have been underway all night; but to have kept underway night after night would have been more duty than the short-handed force of the *Reliance* could have well performed, except as to the engineers, who could have easily kept up their regular watch as when underway. The ordinary watch consisted of 5 men. Three were on the lookout at the time and 2 asleep on deck; 1 on the lookout forward and 1 aft with the quartermaster in charge on the quarter-deck.

The watch was not armed, although their arms lay convenient to them.

There was no one stationed at the bitts to slip the cable, and the cable was not unshackled, but there was a slip buoy attached. The boarding nettings were properly spread, and the two guns, a 30-pounder Parrott gun forward and a 24-pounder howitzer aft, were both loaded, but not primed. The arms chest was unlocked.

The quarter-deck was not clear; the ship not ready for action. There were four hammocks swung so low on the quarter-deck that they interfered with the working of the howitzer. There were also chairs and a table on the elevated platform on which the gun rested, and which prevented training of this gun if an opportunity had presented itself for its use.

There was no engineer on watch, and Daniel J. Cole, a first-class fireman, who, it was expected by the officers in charge should rest all night on a settee in the engine room, was asleep, and to be called by one of the watch when the services of the engine were needed.

There were 40 pounds of steam on at the time of the capture, and the ordinary speed under this steam would be about 10 knots an hour.

And finally, that no officer, except the commander, showed any earnest exertion to defend his vessel, and that no authority was assumed by any one in directing a repulse of the enemy.

Opinion of the court in the case of the Reliance.

The court, after due deliberation, are of opinion:

That the primary cause of the loss of the steamer *Reliance* must be attributed to the ignorance and the want of naval experience on the part of Henry Walters, acting ensign, U. S. Navy, commanding steamer *Reliance*. It will be obvious to any officer that it would have been almost next to impossible to have boarded either of these steamers while underway, and that while at anchor they were almost entirely at the mercy of the enemy.

To have been underway on this occasion, when it was practicable to be done, was the first duty of the officers in charge, after having received such intimations of the designs of the enemy as they had.

Although the commander of the *Reliance* says he was ordered to anchor within hail of the *Satellite*, yet, being at anchor, he should have been on that account proportionately more vigilant to prevent surprise in his exposed condition. The most ordinary precautions, which almost common prudence would have dictated, were omitted. With the knowledge that the vessel's safety depended upon her being underway, the standing order should have been that the first thing to be done was the starting ahead of the engines and the slipping of the cable.

Some of the precautions necessary to secure this were neglected.

The cable was not unshackled, and no person was stationed at the bitts to slip it, and the fireman in charge of the engine actually asleep.

These neglects not only exhibit a lack of experience and ordinary forecast in the commanding officer, but also force upon the mind of the court a deficiency in discipline and organization fatal alike to defense as well as attack.

But after the enemy had actually boarded the *Reliance*, and a disposition was evinced by the crew to repel the enemy, the same inexperience was shown in this officer in repelling the attack.

Instead of an organization of the crew, or an attempt at it, which might have succeeded in defeating the assailants, or at all events would have given courage to the crew and resulted in a heavier punishment to the enemy, every one was left to fight for himself. No command was assumed by any one, and the resistance offered was only the result of individual bravery.

The court, while pointing out the errors and ignorance of the commanding officer of the *Reliance*, do not omit to take into consideration that during the attack he acted with bravery and to the best of his ability, and which in a great measure relieves his want of precaution against surprise from its otherwise inexcusable character and shows that his failure to take them proceeded more from inexperience than negligence.

Second. In regard to Thomas Brown, acting master's mate and executive officer, the court find that on the occasion of the capture of the *Reliance*, and while in action, he displayed cowardice, and pusillanimously cried for quarter.

Third. In regard to James McCaulley, second assistant engineer and in charge of the engine, the court find that at no time during the action was he at his station, nor did he manifest any desire to perform his duties as engineer in charge; nor did he offer any zealous resistance to the enemy.

Fourth. In regard to Alexander [D.] Renshaw, third assistant engineer, the court find that in the time of battle he displayed cowardice and withdrew from and kept out of danger to which he should have exposed himself, and deserted his station.

Fifth. In regard to Henry L. Mangan, paymaster's steward, the court find that during the attack he did not expose himself to danger or zealously assist in repelling the boarders.

Sixth. In regard to Daniel J. Cole, first-class fireman, the court find that, although he was asleep in the engine room, yet this habit was known to and acquiesced in by his superior officers, who required him to take sole charge all night, and day while at anchor, and to stand his regular watch with them while underway, and which are sufficient to exculpate him from any blame.

The engineers, in thus throwing their united duty upon a single subordinate, both behaved indecorously and grossly neglected their duty.

Seventh. The court also desire to express their appreciation for the bravery and resistance exhibited by Anthony Spisenger, quartermaster; James Welch, landsman; James Watson, boatswain's mate; James Rowbottom, landsman, and also by the rebel deserter, who was mortally wounded during the action.

Material facts in the case of the Satellite.

The material facts in the case of the U. S. S. *Satellite*, which the court deem to be established by the evidence, are:

That the orders and instructions of Commodore Harwood, and the warnings of an attempt at surprise by the enemy mentioned in the case of the *Reliance*, were known as well to the officers of the *Satellite* as to those of the *Reliance*.

That on the morning of the 23d of August, 1863, at about twenty minutes past 12 o'clock, while the *Satellite* lay anchored within 150 yards of the *Reliance*, two boats were hailed by the lookout forward (a colored man named Nelson Frazier, a contraband), on the hurricane deck of the *Satellite*, and was answered by those in the boats, "Second cutters." The lookout answered, "Come alongside." They were hailed a second time, and this was answered by "Privateers."

In a few minutes the party began boarding the *Satellite*, and William H. Fogg, acting master's mate, or Rudolph Sommers, acting ensign and executive officer, ran through the gangway crying "Boarders."

This aroused several of the crew, and by the time they were able to get out of their hammocks several of the enemy had reached the hurricane deck, several more were on the forward deck, and three or four entering the gangway at the glass door.

At this stage Rudolph Sommers was engaged, without arms, with three or four, until he fell with his wounds, they demanding of him to surrender and he replying he would not. Sommers was wounded severely several times. The boatswain's mate was at this time going to the assistance of Sommers and was shot from the upper deck in the shoulder, from the effects of which he has since died.

As soon as the officers ran through the gangway calling "Boarders," he went aft to the captain's cabin, and told him after he came to the door there were boarders. The captain replied to him, "Drive them off," and went back into his room, and closed the door.

Mr. Fogg was not seen after this during the engagement, and the captain remained in his room until he was brought out by the enemy.

In a very short time the portion of the crew who were awake were overpowered. William Bingham, master-at-arms, as soon as he was aroused, ran to the armory and distributed three pistols, but they were not capped, and he himself started for the hurricane deck to procure a boarding pike, when, just as his head was above the awning, he received a severe cut from a cutlass which sent him below again. William R. Northup, gunner's mate, was taken early in the action on the hurricane deck, endeavoring to obtain a pike.

Immediately upon their securing a greater portion of the crew, the rebels went to the captain's cabin and demanded of him, with an oath, to surrender. The captain instantly cried out, "I surrender." They then opened the door and brought him out, and told him if he did not come out and stand on the gun carriage and halloo out he surrendered the ship, they would blow his brains out.

The captain then came out on the quarter-deck, and cried at the top of his voice [that] he surrendered the ship.

All resistance after this ceased, and the enemy dispatched one of the two boats with which they had boarded off to the *Reliance*.

Isaac Johnson, second assistant engineer and in charge of the engine, came from his cabin, and, when he saw a small colored boy struck on the face with a cutlass and the way they treated Mr. Sommers, returned to his cabin and remained there inactive until the vessel was captured.

Christopher McCormick, third assistant engineer, was not seen during the whole fight.

John Mee, third assistant engineer, was on watch at the time, and remained at his station doing his duty.

The usual watch consisted of two men armed, with bayonets, and the officer of the deck. The watch on this occasion was one colored man, Nelson Frazier, who was stationed as the lookout forward on the hurricane deck, and Mr. Fogg, the officer of the deck.

Mr. Fogg has been known on several occasions to have been asleep on his watch.

The *Satellite* was anchored. The chain was shackled, but a hammer and chisel were near by to drive the pin out.

No one was stationed near the bitts to slip the cable.

There were 20 pounds of steam on at the time of the capture, and it was practicable, so far as the depth of water was concerned, to have been underway all night.

The crew consisted of 6 officers, 2 petty officers, 16 white men, and 8 colored men. Two of the crew were at the time of the capture in irons.

The great guns were loaded, and the small arms were loaded, but not capped. Not a shot was fired by the officers or crew of the *Satellite*, and no officer, with the exception of the one who cried out "Repel boarders," assumed any control or authority during the attack, nor did anyone encourage the men to fight, except Mr. Sommers, who in his own person set them an example.

The wounded on the part of the *Satellite* were 5, and 1 killed; on the part of the enemy, none.

The attack was a complete surprise, notwithstanding the warnings received, and nothing was in readiness to repel it.

Opinion of the court in the case of the Satellite.

The court, after due deliberation, are of opinion:

That the attack upon the steamer *Satellite*, as in the case of the *Reliance*, was a complete surprise upon her officers and crew, notwith-

standing the orders and intimations of the designs of the enemy they had received.

Having received such warnings, and not to have taken the proper precautions and given the proper orders, exhibit negligence and incapacity.

The standing order should have been, on the hailing of a boat, that the engines should be started and the cable slipped; and the court are of opinion, if this order had been given and the men previously practiced in its execution, that on this occasion both the *Satellite* and *Reliance* could have gotten underway before the enemy could have boarded them, and then could have destroyed them or taken them prisoners.

In this case no such order was given; no attempt was made to move; the cable was shackled, not ready for slipping, and no one was stationed at the bitts to do it.

The lookout was incompetent and insufficient, and could well, from the number of the crew, have been better and more.

So great was the surprise that when the enemy had actually boarded the vessel nothing was in readiness for effectual resistance, and the vessel was surrendered without a shot being fired in its defense.

There was no organization, no discipline, and no courage, with one exception, to be mentioned afterwards, displayed by any one of the officers.

First. The court find, in regard to John F. D. Robinson, acting master commanding, in that he remained in his cabin during the engagement after being notified by the acting master's mate of the boarders, that he withdrew from and kept out of danger to which he should have exposed himself, and failed to encourage, in his own person, his inferior officers and men to fight courageously.

And in that he instantly cried "I surrender," without knowing the conditions of affairs, and coming on the quarter-deck and hallooing at the top of his voice [that] he surrendered the ship, he showed cowardice.

Second. In regard to Rudolph Sommers, acting ensign and executive officer, the court find that he acted with bravery during the attack and defended the vessel to his utmost.

Third. In regard to Isaac Johnson, second assistant engineer and in charge of the engine, the court find, in that he came out of his cabin and returned to it, where he remained during the whole time of the fight, he withdrew from and kept out of danger to which he should have exposed himself, and displayed cowardice.

Fourth. In regard to Christopher McCormick, third assistant engineer, the court find that at no time was he seen by any one either at his station or elsewhere, and that he did not expose himself to danger, which it was his duty to encounter.

Fifth. In regard to John Mee, third assistant engineer, the court find that he was at his station and did his duty.

Sixth. In regard to William H. Fogg, acting master's mate, the court find that on several occasions while in the Rappahannock, and not long previous to the attack, he has slept on his watch; and that on the occasion of the capture of the *Satellite*, after he woke the captain he was no more seen.

Seventh. The court desire to state that William Bingham, master-at-arms, and William R. Northup, gunner's mate, did their whole duty.

It is proper here to state that the court have made up their findings from the testimony of only a part of the crews of the *Reliance* and *Satellite*, and the officers, with the exception of Henry Walters, acting

ensign, commanding the *Reliance*, had no opportunity to explain their conduct, as they are still confined in prison in Richmond.

JOHN RODGERS,
Captain, and President of Court.
SAML. L. PHILLIPS,
Judge-Advocate.

There being no further business before them, the court then adjourned sine die.

JOHN RODGERS,
Captain, and President of Court.
SAML. L. PHILLIPS,
Judge-Advocate.

Statement of Acting Ensign Walters, U. S. Navy, late commanding U. S. S. Reliance, regarding the capture of that vessel.

NAVY YARD, WASHINGTON, *December 2, 1863.*

SIR: When at the Department on the 23d ultimo on business respecting a leave of absence it was intimated to me by Hon. Assistant Secretary Fox that I was to be dismissed the service for the loss of the U. S. S. *Reliance*, under my command, by capture on the Rappahannock in August last, notwithstanding that my conduct in action at the time was highly approved of.

The reasons, as given to me in the conversation, for this action were, viz:

That I had lost a man-of-war.

That the Department did not recognize the possibility of a man-of-war being captured.

That there was no vigilance, and that had the *Reliance* been kept underway, as should have been the case instead of being at anchor, the vessel would not have been taken.

That when I stated that I was at anchor in obedience to my commanding officer (Acting Master Robinson, of the *Satellite*) and against my own judgment, Mr. Fox stated to me that I should have been underway notwithstanding.

Now, sir, in reply I have to state that, in the first place, although the *Reliance* was a commissioned vessel of war, she was a very small tug propeller, with but one serviceable gun (a 24-pounder) mounted aft, and with a crew reduced by promotion and discharge to 10 men forward, and 4 firemen, the officers besides myself being one master's mate and two engineers.

Again, that the *Reliance* was very low in the water, her rail being no higher than a large cutter's gunwale, and therefore, with an enemy well organized, and so greatly outnumbering us, the capture, while lying at anchor, was not a very doubtful venture.

Again, in regard to the vigilance exercised, I have the following facts to submit:

Ever since I have been in command of the vessel I have faithfully obeyed the printed instructions of the Potomac Flotilla orders, viz, boarding nettings triced up, chain ready to slip, howitzer loaded with canister, small arms ready in a convenient place for immediate service, and strict lookouts kept, all of which was done on the night of our disaster.

The lookouts were vigilant, for though the night at the precise time of capture was very dark, the boats approaching were seen, hailed, and fired into before arriving alongside. The reason why the chain was not slipped in time is thus accounted for by me: On account of the darkness of the night, the distance of the boats from the vessel when hailed was a very short one; the enemy gave way with surprising speed and at the critical moment the enemy had succeeded in mortally wounding by musket shot the man attempting to slip the cable. During this time I was actively engaged in getting my vessel underway, having, at the first alarm, run forward to the pilot house for that purpose, and while so engaged was shot through the body and cut down. My endeavors, however, did not cease entirely even after being wounded, for I succeeded in crawling to the wheel and blowing the whistle for help from the *Satellite*, not knowing that she had been captured so quickly.

Had the vessel been kept underway at night, as is now the case on the Rappahannock, she could not have been taken. The force of this truth I recognized long before the capture. I knew the weak points in my defense and acted accordingly. On the night previous to the disaster I was alone and therefore could act on my own judgment. When night set in, I ordered steam ready and was in the act of heaving up anchor when the *Currituck* appeared, and I was told to anchor for the night.

But, sir, on the night of capture I was ordered by my superior officer, Captain Robinson, to anchor within hail of his steamer, which order I of course had to obey. I regretted this at the time, but as I knew that he had the same information in regard to the enemy that I had, I could propose nothing to the contrary.

When attacked by the enemy everything possible was done by me and many of my crew to repel successfully their attack. That the resistance, though a futile one, was spirited, is proven by the fact that it was not until the third boat sent from the *Satellite* joined in the attack that my vessel was captured. All the enemy that were hurt received their wounds on the *Reliance*. Had I not been so completely disabled by gunshot and cutlass wounds, I have reason to believe that the chances of changing our cruel fortune might have been greatly increased.

In conclusion, I would very respectfully refer to my past conduct as an officer in the U. S. Navy, evidence of which is within reach of the Department, several letters being on file. I entered the service at the outbreak of this rebellion, in May, 1861, attached to the *Freeborn*, under the late Commander J. H. Ward; was present in all the early actions participated in by him, and was fighting with him when he fell at Mathias Point. Since that time have always continued to be attached to the flotilla, have been well spoken of by every commanding officer under whom I have served, and was finally given command of the *Reliance*, as a reward for having saved her from impending shipwreck in the Chesapeake Bay in March last. I would also refer to Commodore Harwood for my conduct since under his command.

Every statement made in this communication is a fact of which the proof is at hand. I very respectfully submit the same to your consideration, with the firm belief that great injustice would be done me in thus dismissing me [from] the service.

I have the honor to be, very respectfully, your obedient servant,

HENRY WALTERS,
Acting Ensign, U. S. Navy.

Hon. GIDEON WELLES,
Secretary of the Navy.

Letter from John McCabe, esq., to the Secretary of the Navy, regarding capture, by a party of Confederates on board the steamer Satellite, of schooners Coquette and Two Brothers.

PHILADELPHIA, *September 28, 1863.*

SIR: Your favor is at hand, and in reply to your enquiry in regard to the capture of the two schooners *Coquette* and *Two Brothers*, I here say: When lying, August 25, 1863, off the mouth of the Rappahannock River, between 6 and 7 fathoms water, about 7 to 8 o'clock in the morning, when the U. S. gunboat *Satellite* came out to them flying the American colors and hailed them and asked them where they were bound and what was their cargo, they answered, "Anchors and chains, and bound for New York." The one in command then said, "You are my prisoners and the vessels a prize to the Southern Confederacy," and then took them in tow up the Rappahannock River and landed the two crews and sent them to Richmond, and then took the vessels up the river to land their cargoes. This is as far as I have been able to learn as yet.

The value of the two schooners is as follows:

Coquette will carry 50 tons and worth $2,000. *Two Brothers*, 47 tons and worth $1,700, and had in cargo 43,000 weight of anchors and chains in the two, worth $60 a thousand pounds, wholesale price.

Schooner *Coquette* was manned as follows: William Wible, master; Patrick Nagle, Edward Sullivan, Thomas Lahey. Schooner *Two Brothers*, William Boozby, master; Robert Murdock, Charles Vorger, George Hader.

The above I beg leave to submit to your honor.

Yours, respectfully, JOHN MCCABE.

Hon. GIDEON WELLES,
Washington, D. C.

Report of Lieutenant Wood, C. S. Navy, of the capture, by a force under his command, of the U. S. steamers Satellite and Reliance, August 23, 1863.

C. S. S. SATELLITE, *August 25, 1863.*

SIR: I am thankful to report to you the capture last night, off the mouth of the Rappahannock, of the U. S. gunboat *Satellite*, 2 guns, 40 men; and the *Reliance*, 2 guns, 40 men.

Lieutenant Hoge dangerously wounded.

Midshipman Cooke and 3 men slightly.

Captain Walters, of the *Reliance*, dangerously wounded, and some seven or eight others of the enemy; one or two killed.

* * * * * * *

Respectfully, your obedient servant,

J. TAYLOR WOOD,
Lieutenant, Commanding.

Hon. S. R. MALLORY,
Secretary of the Navy.

Detailed report of Lieutenant Wood, C. S. Navy, of the capture, by a force under his command, of the U. S. steamers Satellite and Reliance, and schooners Golden Rod, Coquette, and Two Brothers.

RICHMOND, *September 7, 1863.*

SIR: I report the return to this place of the party under my command. Leaving on the 12th ultimo with 71 men and 11 officers, accompanied by four boats mounted on wheels, on the 16th launched them in the Piankatank, 25 miles from its mouth. That night we rowed down to the bay in search of the enemy. Two gunboats were discovered, but underway; the attempt was abandoned.

Returning up the river for 2 miles, entered a creek for concealment until night. Soon after daylight a gunboat came up and sent in five boats. I ordered our boats out of range of her shell, with most of the men under Lieutenant Hoge to defend them and follow the enemy down the creek on their return. I remained at the mouth with ten men, ordering them to keep concealed, but one exposing himself, the enemy opened fire; it was returned, and they were easily driven off, with the loss of their commanding officer and others.

Our position being known, moved across to the Rappahannock on the 19th, and it was only after three attempts that we succeeded in finding the enemy at night. On the 23d, 1 a. m., discovered two steamers at anchor off Windmill Point, so close to each other that it was necessary to board both at the same time. Pulling in line ahead until within hailing distance, formed line abreast, boarding them, a boat on each bow. After a short resistance, both vessels were ours. They were the U. S. S. *Satellite*, Captain [J. F. D.] Robinson, 2 guns and 40 men, and the *Reliance*, Captain Walters, 2 guns and 30 men, both belonging to the Potomac Flotilla. In our four boats were 60 men and officers. Getting steam at daylight, ran up to Urbana, landed the prisoners. Communicated with Colonel Rosser, Fifth Virginia Cavalry, who kindly furnished a party of 30 sharpshooters, Captain Clay, commanding.

Unfortunately both vessels were short of coal, thus preventing the ulterior plan of the expedition from being carried out. It was divided nearly equally between both vessels, and at night we steamed out into the bay. The *Reliance*, not working well, was ordered back. A fresh breeze from the southward, with rough water, prevented the accomplishment of anything. The next night the schooners *Golden Rod*, from Baltimore for Maine with coal, the *Coquette* and *Two Brothers*, from Old Point for Philadelphia with anchors and chains, were captured and towed in the river. Filling up with coal, I attempted to run out again, but the weather and a large force of the enemy prevented.

The *Golden Rod*, drawing too much water to go up, was stripped and burned. The other two were towed up to Port Royal, where both steamers and vessels were stripped and scuttled. While this was being done the enemy from the opposite side shelled the steamers and our position for four hours without injury. Three guns landed from the steamers were in position and replied. Lieutenant Hudgins commanded during the firing.

Everything of value except the boilers was landed, the heavy anchors, chains, and bedplates in charge of Master Robb. The 32-pounder was lost overboard. All else was moved to the railroad at Milford, where it was left in charge of Midshipman Cooke and six men.

Lieutenant Hoge was dangerously wounded in boarding the *Reliance*. Midshipman Cooke was slightly wounded, and one man (Fitzgerald). Four wounded officers of the enemy were left at Urbana, where the enemy retook them. Two of their men were killed.

I respectfully recommend Second Lieutenant Hoge for promotion to first lieutenant and Midshipmen Gardner and Goodwyn as second lieutenants. The other officers of the party were Lieutenant Hudgins, Midshipman Cooke, Assistant Surgeon Sheppardson, Engineers Tennent and Bowman, Boatswain Wilson, Pilot Moore, and Master's Mate Russell, all of whom, as well as the men, did their duty.

Respectfully, etc., your obedient servant,

J. TAYLOR WOOD.

Hon. S. R. MALLORY,
Secretary of the Navy.

Joint resolution of thanks to Commander John Taylor Wood and the officers and men under his command, for daring and brilliant conduct.

FEBRUARY 15, 1864.

Resolved by the Congress of the Confederate States of America, That the thanks of the Congress of the Confederate States are due, and are hereby tendered, to Commander John Taylor Wood, Confederate States Navy, and to the officers and men under his command, for the daring and brilliantly executed plans which resulted in the capture of the U. S. transport schooner *Elmor*,* on the Potomac River; of the ship *Alleghany* [*Alleghanian*]† and the U. S. gunboats *Satellite* and *Reliance*, and the U. S. transport schooners *Golden Rod*, *Coquette*, and *Two Brothers*, on the Chesapeake, and, more recently, in the capture from under the guns of the enemy's works of the U. S. gunboat *Underwriter*, on the Neuse River, near New Berne, North Carolina, with the officers and crews of the several vessels brought off as prisoners.

Approved February 15, 1864.

Order of Commodore Harwood, U. S. Navy, commanding Potomac Flotilla, to Acting Master Rogers, U. S. Navy, commanding U. S. schooner William Bacon, to proceed with the vessel under his command to Point Lookout, Md.

AUGUST 29, 1863.

SIR: On the completion of the repairs upon your vessel you will proceed without delay to Point Lookout, Md., and anchor there in a favorable position to cover the rebel camp at that point.

Report to the senior naval officer at that place, or in case you should be the senior naval officer, then place yourself at once in communication with the commanding officer of the post and hold yourself ready to comply with all requests that he makes in the line of your duty.

Very respectfully, your obedient servant,

ANDW. A. HARWOOD,
Commodore, Commanding Potomac Flotilla.

Acting Master W. P. ROGERS,
Commanding U. S. Schooner William Bacon.

Order of the Acting Secretary of the Navy to Commodore Harwood, U. S. Navy, commanding Potomac Flotilla, transmitting information regarding condition of gunboats at Point Lookout, Md.

NAVY DEPARTMENT, *September 2, 1863.*

SIR: I herewith enclose a communication dated 1st instant, addressed to this Department by the Secretary of War, in reference to the condition of the gunboats at Point Lookout, and suggesting that a stronger force be stationed there.

Please return the communication as early as practicable, with such information as will enable the Department to reply to it.

Very respectfully, etc.,

G. V. FOX,
Acting Secretary of the Navy.

Commodore A. A. HARWOOD,
Commanding Potomac Flotilla.

---

* See p. 118. † See p. 137.

[Enclosure.]

WAR DEPARTMENT,
Washington City, September 1, 1863.

SIR: I send you the following extract from a report made to this Department by Major-General Hitchcock, in relation to the condition of the gunboats at Point Lookout on Sunday last, and ascertained by him on an inspection of the state of affairs at that post, made under the direction of this Department:

There are two gunboats at the point, one with about forty men (as I was informed), the other "not half manned;" and neither of them have the use of steam power, one having no engine, the other a wholly disabled engine.

I saw three gunboats between the point and Alexandria, but their condition is unknown to me.

I beg to suggest that a stronger gunboat force should be stationed at that point, if it should be in the power of your Department to place it there. If it is not, you will please inform me.

I have the honor to be, your obedient servant.

EDWIN M. STANTON,
Secretary of War.

Hon. GIDEON WELLES,
Secretary of the Navy.

Report of Commodore Harwood, U. S. Navy, commanding Potomac Flotilla, regarding condition of gunboats off Point Lookout, Md.

POTOMAC FLOTILLA,
Navy Yard, Washington, September 3, 1863.

SIR: I have your favor of 2d instant, enclosing a communication from the honorable Secretary of War, in regard to the number of gunboats at Point Lookout, Md.

I would respectfully state that on Sunday last I stopped at Point Lookout on my way to the Rappahannock River; the gunboats *Yankee* and *Fuchsia* were then anchored off that point. The *Yankee* has been entirely disabled for nearly three weeks, but I have kept her on the station as I was not then able to supply her place, having several vessels of the flotilla under repairs.

Owing to the recent occurrences on the Rappahannock, I was obliged to take away some of the force from Point Lookout to guard that river.

On Tuesday the schooner *William Bacon* was placed in position off the rebel camp at Point Lookout.

The vessels now at that point are the *Jacob Bell*, *Fuchsia*, and *Freeborn*, steamers, in good condition, and the mortar schooner *William Bacon*, the latter carrying four long 32-pounder guns.

Yesterday, on my return from the Rappahannock, I called upon General Marston, and in a long official conversation that I had with him, he seemed perfectly satisfied with the amount and disposition of the naval forces at that point.

The senior officer at Point Lookout has the most particular instructions as to vigilance.

I have the honor to be, with great respect, your obedient servant,

ANDW. A. HARWOOD,
Commodore, Commanding Potomac Flotilla.

Hon. G. V. FOX,
Assistant Secretary Navy.

Report of Lieutenant-Commander Magaw, U. S. Navy, commanding First Division Potomac Flotilla, of information received from U. S. S. Thomas Freeborn.

Semiofficial.] U. S. S. DRAGON,
Point Lookout, September 3, 1863—p. m.

DEAR SIR: No news from the Rappahannock. I have just arrived. The *Freeborn* reports that as we came down in the *Sangamon* the other day she saw some fifty horse, in company with some ox teams, apparently transporting heavy guns. You may recollect she was some distance astern and had the coal schooner in tow.

Yours, faithfully,

SAMUEL MAGAW,
Lieutenant-Commander.

Commodore A. A. HARWOOD,
Commanding, etc.

P. S.—The cavalry and transportation were near Tappahannock, and on that side of the river.

S. M.

Order of Commodore Harwood, U. S. Navy, commanding Potomac Flotilla, to Acting Master Morris, U. S. Navy, commanding U. S. S. Cœur de Lion, enjoining watchfulness in Occoquan River.

SEPTEMBER 5, 1863.

SIR: I enclose a scrap by which you will perceive that smuggling is reported as going on in the vicinity of Occoquan.

You will occasionally look into the mouth of Occoquan Bay and be particular as to overhauling all vessels going into that river, seeing their papers, and looking carefully into the character of their cargoes. Enclosed you will find a list of vessels authorized by my permits to go into Occoquan River. No other vessels are permitted to go there, and those having papers are now obliged to renew them every month.

Very respectfully, your obedient servant,

ANDW. A. HARWOOD,
Commodore, Commanding Potomac Flotilla.

Acting Master W. G. MORRIS,
Commanding Cœur de Lion, and Senior Officer Station A, Potomac River.

[Telegram.]

NAVY YARD, WASHINGTON, *September 17, 1863.*
(Received 8:30 p. m.)

The following information is derived from the pilot who took Acting Master Street up Coan River yesterday, and is transmitted by Acting Volunteer Lieutenant Ives: There is a company of 100 cavalry at Heathsville, head of Coan River, for the purpose of preventing communication between the northern neck and the west side of the Rappahannock, as the rebels are evacuating Richmond. It is also rumored at Heathsville that a force of rebels is to be crossed over the Rappahannock, but for what purpose is not known. The captain of the cavalry gave the above information to the pilot. He said he had been

forced into the service. No confidence is of course placed in the report as far [as] the evacuation of Richmond is concerned, but that there is a body of cavalry at Heathsville there is no doubt. The object of going up Coan River was to bring off Mr. Gulick, a refugee, which can not at present be effected.

ANDW. A. HARWOOD,
Commodore.

Hon. GIDEON WELLES,
Secretary Navy.

Report of Commodore Harwood, U. S. Navy, commanding Potomac Flotilla, regarding capture of schooner Robert Knowles.

SEPTEMBER 17, 1863.

SIR: I enclose herewith certificate* of capture of the schooner *Robert Knowles* off Cockpit Point, by the U. S. S. *Cœur de Lion*, for violating the blockade by landing on the Virginia shore and taking on board a person by the name of Robert M. Clarke, supposed to be a blockade runner and mail carrier belonging to Dumfries, Va.

I have the honor to be, with great respect, your obedient servant,

ANDW. A. HARWOOD,
Commodore, Commanding Potomac Flotilla.

Hon. GIDEON WELLES,
Secretary of the Navy.

Report of Commodore Harwood, U. S. Navy, commanding Potomac Flotilla, transmitting report regarding capture of sloop Music.

POTOMAC FLOTILLA,
Navy Yard, Washington, September 19, 1863.

SIR: I enclose for the information of the Department the report of Acting Master A. J. Frank, commanding the U. S. S. *Adolph Hugel*, near Alexandria, in regard to the capture of the sloop *Music* for having persons on board without passes.

The vessel has been placed in the hands of the district court and the persons found on board turned over to the provost marshal.

I have the honor to be, with great respect, your obedient servant,

ANDW. A. HARWOOD,
Commodore, Commanding Potomac Flotilla.

Hon. GIDEON WELLES,
Secretary of the Navy.

[Enclosure.]

U. S. S. ADOLPH HUGEL,
Off Alexandria, Va., September 18, 1863.

SIR: On the 17th instant, at quarter to 8 o'clock p. m., I captured the sloop *Music*, Captain Hewitt, and J. B. Padgett, belonging to the vessel. The sloop cleared from Georgetown, D. C., on the 10th instant, before I was ordered to the command of this guard vessel, and on her

*Not found.

return up the river she brought her manifest on board to report. Finding that she had more men on board than her manifest certified, and these men being without passes, I therefore detained her. I have sent Prize Master King up with the vessel and all papers. The following men were on board at the time of capture, viz:

T. B. Hewitt, captain of vessel; J. B. Padgett, seaman; William P. Drury, Charles W. Drury, Samuel Drury, William Brown, James Hazel, Charles Steward, passengers.

These men stated that they had permission from a gunboat near Indian Head to land on the Virginia shore to hunt on the big marsh for game, which they did.

Very respectfully, your obedient servant,

ANDW. J. FRANK,
Acting Master, Commanding.

ANDW. A. HARWOOD,
Commodore, Commanding Navy Yard and Potomac Flotilla.

[Telegram.]

NAVY DEPARTMENT, *September 19, 1863.*

It is reported that some kind of a move is being made on or near Mathias Point. Examine and report to the Department.

GIDEON WELLES,
Secretary of the Navy.

Commodore A. A. HARWOOD,
Commandant Navy Yard, Washington.

[Telegram.]

NAVY YARD, WASHINGTON, *September 19, 1863.*

The *Wyandank*, storeship, passed Mathias Point on the 17th. Saw some pickets about 5 miles above the point. A few shells were fired by her at the point from which the rebels fired at an army transport a short time ago. The *Primrose* passed Mathias Point just before sunset yesterday. Saw and heard nothing of the movement in that quarter. A dispatch will be sent as soon as possible to make further enquiry.

ANDW. A. HARWOOD,
Commodore.

Hon. GIDEON WELLES,
Secretary Navy.

[Telegram.]

NAVY YARD, WASHINGTON, *September 21, 1863.*
(Received 12:15 p. m.)

Referring to your telegram of 19th instant, directing me to examine into the supposed movement of the rebels on or near Mathias Point, Acting Master Hill, commanding the *Dragon*, a reliable officer, reports that he engaged a negro living between Boyd's Hole and Mathias Point to watch the movements of the enemy. He represents that the force consists of a company commanded by a Captain Todd. This was about

the 17th. It is thought probable that there may be more troops there now. A good lookout is kept at Mathias and Boyd's Hole, two vessels being always kept near enough to act together in case of any demonstration by the rebels. Mr. Hill states that he has not been able to discover any of the enemy, but that the nature of the ground is such they can erect batteries without being seen from the river. He suggests that if a small body of troops, say from 50 to 100 men, were sent down to him, he could make good use of them as a reconnoitering party without much risk. Further information may be looked for shortly.

ANDW. A. HARWOOD,
Commodore.

Hon. GIDEON WELLES,
Secretary of the Navy.

Report of Acting Volunteer Lieutenant Ives, U. S. Navy, fleet captain, Potomac Flotilla, of his return from the Rappahannock River.

U. S. S. ELLA,
Piney Point, September 20, 1863.

SIR: I have just returned from the Rappahannock, where I left everything all safe at daylight this morning.

Here I found the *Leslie*, just arrived from Washington.

I went to the Rappahannock yesterday and carried Acting Master Linnekin to join his vessel. I feel safer in that quarter when he is there than with any of the other officers now on that station in charge.

Paymaster Carpenter, having completed his labor here, returns by the *Leslie* to-day.

I have transferred Acting Third Assistant Engineer Henry Knight from the *Fuchsia* to the *Currituck*. Will you write an order to that effect? Both vessels have three engineers now.

I would suggest that the boarding netting of the *Yankee* can be given to the *Freeborn* and the new kind be fitted for the *Yankee* while that vessel is at the yard and does not need it. This will give protection to the *Freeborn* temporarily, until the new ones can be made for her also.

After coaling to-morrow, I expect to take a run up the river to visit the upper stations. I send up the result of the investigation in regard to the *Currituck's* officers, and also the result of the investigation called for by Mr. Holmes's letter so far as Acting Master Street is concerned.

We shall endeavor to investigate still further into the Holmes case, but it is rather a difficult matter to get at, as the detectives are accused and they are not to be found.

I have no further news from the Virginia shore.

All the vessels are very much in want of men.

Very respectfully, your obedient servant,

THOMAS POYNTON IVES.

Commodore A. A. HARWOOD,
Commanding Potomac Flotilla.

[Telegram.]

NAVY DEPARTMENT, *September 23, 1863.*

Captain Fisher, at Alexandria, has been detailed with fifty men. He goes down in his own boats. Assist him on his arrival at Mathias

Point, and cooperate with him in the attainment of the object of the expedition. Let the officer going down see Captain Fisher and arrange matters. He will be found to-day at General Slough's headquarters.

GIDEON WELLES,
Secretary of the Navy.

Commodore A. A. HARWOOD,
Commandant of Navy Yard, Washington.

[Telegram.]

NAVY YARD, WASHINGTON, *September 23, 1863.*
(Received 4:15 p. m.)

The *Leslie* will go down immediately with orders to the commanders of the gunboats off Mathias Point to cooperate with the movement of Captain Fisher. We have no gunboats here and only the *Teaser* and *Dragon* there, but they can be of good service. I have telegraphed to Captain Fisher to confer and arrange matters with Acting Master Hill, of the *Dragon.*

ANDW. A. HARWOOD,
Commander.

Hon. SECRETARY OF THE NAVY.

Report of Commodore Harwood, U. S. Navy, commanding Potomac Flotilla, transmitting information regarding burning of schooner in Old Haven Creek and grounding of revenue steamer Hercules, September 23, 1863.

POTOMAC FLOTILLA,
Navy Yard, Washington, D. C., September 29, 1863.

SIR: From a report received yesterday from the *Currituck*, then at the mouth of the Rappahannock, I learn that a large schooner was run on shore and burned at Old Haven Creek (a place which I can not find on any of the maps, but which I suppose to be Milford Haven Creek), just beyond the limits of my command.

Acting Master Linnekin represents this schooner as being one loaded with goods from New York, but does not give any proof of the accuracy of the statement. He dispatched the *Freeborn*, commanded (in the absence of Lieutenant Commander Magaw) by Acting Master W. A. Arthur. The report of that officer is herewith enclosed.

Acting Master Linnekin also reports that on the 23d instant he sent the *Tulip* to Wicomico River to assist in getting off the revenue cutter *Hercules*, which was aground.

It appears from the letter of Lieutenant-Commanding John C. Baker of that service (herewith enclosed) that after the *Hercules* got off the bar she was attacked by a party of rebels and drove them off.

The last clause in Lieutenant Baker's letter I do not understand, as I presume he would be perfectly justifiable in seizing the party who attacked him if he could come at them.

I have the honor to be, with great respect, your obedient servant,

ANDW. A. HARWOOD,
Commodore, Commanding Potomac Flotilla.

Hon. GIDEON WELLES,
Secretary of the Navy.

[Enclosures.]

U. S. S. CURRITUCK,
Off Windmill Point, September 23, 1863.

SIR: I sent the *Anacostia* and the *Tulip* to the Piankatank this afternoon, to obtain information [in] regard to a schooner that was run on shore at Old Haven Creek, where she was seen burning at an early hour this morning. It proved to be a large schooner, loaded with goods from New York, for the enemy, name not ascertained. I think most of the goods were burned with the vessel, for I sent the *Freeborn* there as soon as she was discovered to be on fire.

Enclosed is the report of Acting Master William A. Arthur, U. S. S. *Freeborn*. Acting Master Nelson Provost also brings reliable news that a number of boats are near the Piankatank on wheels, ready to make an attack as soon as any point is left unguarded.

At 4 this morning I dispatched the *Tulip* to the Wicomico River to assist in getting off one of the revenue vessels that I learned was aground at that point. Please find enclosed a statement of John G. Baker, lieutenant, commanding revenue steamer *Hercules*.

I beg to enclose a requisition for revolvers, navy swords, and ammunition. Revolvers are what we need very much, for they are about the only arms we can depend upon if the enemy should get alongside. Twelve of the revolvers are for the captains, first spongers, and loaders. In compliance with the Ordnance Instructions for the U. S. Navy, three revolvers are required for officers that have never been furnished with arms. Twelve navy swords are needed in addition to the cutlasses now on board.

Very respectfully, your obedient servant,

T. J. LINNEKIN,
Acting Master, Commanding.

Commodore A. A. HARWOOD,
Commanding Potomac Flotilla, Navy Yard, Washington, D. C.

[Subenclosures.]

U. S. S. FREEBORN,
Potomac Flotilla, Rappahannock River, September 23, 1863

SIR: In obedience to your order I proceeded down the bay to the entrance of Old Haven Creek where the vessel was seen burning. On my way down I spoke the U. S. bark *Young Rover*, blockading off said station. I enquired what vessel that was on the beach burning. The answer I got was that they did not know what vessel it was.

I then ran inshore to within half a mile of the burning vessel, believing her to be a blockade runner. Seeing a large number of men on the beach and some thirty or more boats taking what I supposed to be goods from an inshore channel, I fired three shells among them to prevent them taking the goods from the beach. After dispersing the boats and men I proceeded back to report to the senior officer present, being unable to accomplish anything more, as there was a heavy sea running and I could not land in small boats.

Very respectfully, your obedient servant,

WM. A. ARTHUR,
Acting Master, Commanding.

T. J. LINNEKIN, Esq.,
Acting Master, Commanding, and Senior Officer Present.

U. S. REVENUE STEAMER HERCULES,
Great Wicomico River, September 22, 1863.

SIR: On Sunday, the 20th instant, as we were steaming down the Great Wicomico River, having been up the river on business relative to a witness in a prize case, we grounded on a sand bar. On Monday evening after dark we got off. It being too dark to come down the river that night, in consequence of a difficult channel, I was compelled to wait till morning. Anticipating an attack from a party on shore, every precaution was made to repel it. Everything remained quiet till about 4:30 on Tuesday morning, when—we then lying about 60 or 70 yards from the shore—a party on shore opened fire upon us, apparently with rifles, to which we immediately replied, having detached a portion of the crew for that purpose. After the first volley from the steamer the rebels retreated behind an embankment. We hove up anchor immediately in order to bring our rifled gun to bear, the enemy, in the meantime keeping up a rapid fire, the most of their balls going a foot or two above our heads.

As soon as we brought our rifled gun to bear upon them and gave them a shot, they retreated to the woods. After waiting some time for another sight of them, I proceeded to ascertain the names of the leaders of the party, a list of whom I give below:

Washington Corbin, captain; John Harding, jr., Lucius Harding, James Kent, ——— Carter, ——— Hurdlen, ——— Farren, ——— Hurst.

The rest were cavalrymen, and I am told were a portion of the party that captured the *Satellite* and *Reliance*. Having no authority to seek redress from the party who attacked us. I submit the above report to you.

JOHN G. BAKER,
Lieutenant, Commanding.

COMMANDER OF THE U. S. NAVAL STEAMER TULIP.

Report of Commodore Harwood, U. S. Navy, commanding Potomac Flotilla, regarding reconnoissances at Boyd's Hole and Mathias Point, Va., September 23, 1863.

POTOMAC FLOTILLA,
Navy Yard, Washington, September 26, 1863.

SIR: The *Dragon*, Acting Master G. E. Hill, returned to the yard this morning. Mr. Hill reports that on Wednesday evening, the 23d instant, he landed fifty men, belonging to the First District of Columbia Volunteers, commanded by Captain [Marvin P.] Fisher, U. S. Army, at Boyd's Hole, in a large launch belonging to the flotilla, under charge of Acting Ensign Benjamin, of the *Resolute*.

There are no batteries in construction at Boyd's Hole, but good natural formation in two or three places for field batteries. Captain Fisher reconnoitered for 2 miles in the interior without seeing any rebels; they had, however, been there in small squads, according to report.

On the morning of the 24th Acting Master Hill landed the same party at Mathias Point. Here there were more evidences of the enemy's having been about, and for 3 miles in the interior to which the reconnoisance extended, there were traces of quite a number of cavalry which had been divided into small squads. This party, to all appearance, has its rendezvous at Port Conway, on the Rappahannock, from which the distance across the peninsula is short.

Other squads were heard of, one commanded by a Captain Boyce and another by Captain Todd.

There are no signs of recent batteries on Mathias Point. The old trenches dug at the commencement of the rebellion remain and might be used for light fieldpieces, as in the case of the army transport which got aground at Cedar Point and was fired at from these trenches some weeks ago.

Such batteries, however, disappear immediately on the approach of the gunboats.

Captain Fisher destroyed some old shanties and barns which had been used as quarters for blockade runners and scouts, and the party also destroyed several scows and canoes which had been hauled up into the woods.

The cavalry force which has made its appearance in various places on the peninsula is, I think, principally occupied in preventing the escape of candidates for the rebel conscription.

I have the honor to be, with great respect, your obedient servant,

ANDW. A. HARWOOD,
Commodore, Commanding Potomac Flotilla.

Hon. GIDEON WELLES,
Secretary of the Navy.

Order of Commodore Harwood, U. S. Navy, commanding Potomac Flotilla, to Acting Volunteer Lieutenant Ives, U. S. Navy, fleet captain, for the removal of the family of Mr. G. Starrett.

SEPTEMBER 24, 1863.

SIR: By order of the Secretary of the Navy (at the instance of the President of the United States), the family, friends, and such of the effects as can be removed without unnecessary risk or delay, are to be brought away from Carter's wharf, on the Rappahannock. As it is understood that the ground in this neighborhood is not of a character to render the approach particularly hazardous, it is only necessary to add, that I confide in your known discretion to effect the removal at the proper time and with adequate means, taking care to cover the embarkation with the guns of the boats employed, and to effect the removal in a safe and systematic manner. Mr. Starrett and Mr. Gulick will go with the party and can describe the locality. It will be better to be abreast of the wharf at daylight to prevent information reaching the enemy in time to oppose any obstacles.

Very respectfully; your obedient servant,

ANDW. A. HARWOOD,
Commodore, Commanding Potomac Flotilla.

Acting Volunteer Lieutenant T. POYNTON IVES,
Fleet Captain, Potomac Flotilla.

Report of Commodore Harwood, U. S. Navy, commanding Potomac Flotilla, of the removal of the family of Mr. G. Starrett.

SEPTEMBER 29, 1863.

SIR: In accordance with your instructions of 24th instant, made upon the recommendation of his Excellency the President of the United

Letter from Commodore Harwood, U. S. Navy, commanding Potomac Flotilla, to Acting Rear-Admiral Lee, U. S. Navy, commanding North Atlantic Blockading Squadron, regarding burning of large schooner by Confederates.

OCTOBER 1, 1863.

SIR: I enclose herewith the copy of a letter* from Acting Master William A. Arthur to Acting Master Linnekin, in reference to the recent burning of a large schooner by the rebels at Milford Haven (called Old Haven).

I have reason to believe that the schooner was not a blockade runner, as surmised by Mr. Arthur, but a vessel captured by the rebels in the bay, run on shore and set fire to after a small portion of the cargo had been landed, to prevent her recapture and the recovery of the goods by the gunboats.

I have reliable news that a number of boats are near the Piankatank on wheels, ready to put out and make captures on the bay whenever they discover vessels unprotected by gunboats.

I write this in order that the senior officer of the division nearest the line which divides our respective commands may be on the alert, and beg leave to suggest that a vigilant, prudent, and enterprising officer would be of great use there at present.

Quite an important portion of the vessels of the Potomac Flotilla is at present out of repair, but I hope in a few days to render the region of the Rappahannock more secure.

I am, very respectfully, your obedient servant,

ANDW. A. HARWOOD,
Commodore, Commanding Potomac Flotilla.

Acting Rear-Admiral S. P. LEE, U. S. Navy,
Comdg. North Atlantic Blockading Squadron, Hampton Roads, Va.

Report of Acting Volunteer Lieutenant Hooker, U. S. Navy, commanding Second Division Potomac Flotilla, regarding information given by five deserters from the Confederate Army.

U. S. S. FREEBORN,
Potomac Flotilla, October 1, 1863.

SIR: I have the honor to report that on the 30th of September I received on board this ship five deserters from the rebel Army, who came to me in a canoe. Their names are James Engram, William J. Dudley, James R. Foster, Robert Yates, and George D. Shrieves, residents of Middlesex County, Va., and members of Companies H and I, Fifty-fifth Virginia Regiment, A. P. Hill's corps of Lee's army.

I have administered the oath of allegiance and delivered them to the provost-marshal of Point Lockout.

They state they left their regiment, then encamped about 3 miles from Orange Court-House, on Sunday, September 20; that Hill's corps was on the south side of the Rapidan, the main body of the Army near Chancellorsville; pickets on Robertson River about 3 miles north of the Rapidan, and a small body of cavalry at Fredericksburg.

That the engine of the *Reliance* has been removed to Richmond, and put on board an ironclad building there, but was not powerful enough for effective service.

---

* See p. 353.

That there is at Richmond one ironclad, mounting six guns, completed, and two others nearly so; that the completed one had been tested under its batteries, and found invulnerable, and that she has a 100-pounder Parrott rifle as a part of her armanent.

They assert the destruction of the two gunboats captured, and that Lieutenant Wood is now in this region, where, they do not know, but believe him to be among the creeks below the Piankatank, and that he has captured two or three small vessels since the one burned by him a few mornings since. Also that his purpose is to make another attack upon the blockading fleet. This information they obtained from persons living near the Piankatank, through which region they passed the day previous to the one on which they came on board my ship.

Very respectfully, your obedient servant,

EDWARD HOOKER,
Actg. Vol. Lieut., U. S. Navy, Comdg. 1st [2d] Div. Potomac Flotilla.

Commodore A. A. HARWOOD,
Commanding Potomac Flotilla and Navy Yard, Washington, D. C.

General report of Acting Volunteer Lieutenant Hooker, U. S. Navy, commanding Second Division Potomac Flotilla.

U. S. S. FREEBORN,
Potomac Flotilla, off Point Lookout, October 5, 1863.

SIR: I have the honor to report, in reference to your communication of September 30, referring to boats of the enemy, etc., permit me to say, I shall use every endeavor to prevent surprise, and will also endeavor to capture or destroy the enemy should he attempt an attack.

I have information, how credible I can not say, of a party with boats between the Rappahannock and Potomac, and that they are endeavoring to pass out of some of the creeks for the purpose of making captures in the bay; whether the same party before reported below the Piankatank I am uninformed.

At Point Lookout there is much anxiety about the light-ship off Smith's Point, caused by reports of refugees and contrabands; the same feeling is prevalent at Piney Point. I shall keep a vessel cruising near the light-ship.

I had intended to return the *Resolute* to her station on the Potomac before the dark of the moon, but with my present information shall retain her for a picket boat on the Rappahannock.

I find considerable anxiety at Point Lookout about the prisoners, to whom several hundred were added a day or two since. I have directed that one, at least, of the gunboats there keep underway at nights.

I have also information that one Roebrick is very active in running the blockade from St. George's Island. I have notified the commanding officer of the *Primrose* of it, and he will look after it.

Very respectfully, your obedient servant,

EDWARD HOOKER,
Actg. Vol. Lieut., U. S. Navy, Comdg. 2d Div. Potomac Flotilla.

Commodore A. A. HARWOOD,
Commanding Potomac Flotilla and Navy Yard, Washington, D. C.

P. S.—I shall cruise to-night off the light-ship myself, and go to the Rappahannock to-morrow morning.

Report of Commodore Harwood, U. S. Navy, commanding Potomac Flotilla, regarding signaling by the enemy between Mathias Point, Va., and the Maryland shore.

POTOMAC FLOTILLA,
Navy Yard, Washington, October 10, 1863.

SIR: The *Dragon*, which came to the yard to-day for coal, brings the following information:

On the 7th instant Acting Master Hill observed signaling from Mathias Point and from the Maryland shore. He dropped quietly down in company with the *Teaser* near and above the point, and found that signals were shown from several different places and answered on the Maryland side. The lights were red, white, and green, and as it was reported that the rebels had a small signal corps at Mathias Point, it is probable that the party operating was the same. Mr. Hill thoroughly shelled the woods, and there has been no signaling observed since. Mr. Hill, in accordance with my general instructions for the vessels of the flotilla to confine their operations on the Maryland side to the water, notified the provost-marshal of the district, including Pope's Creek, Port Tobacco Creek [River], and Upper Cedar Point, that he had received very reliable information that blockade runners, mail carriers, and other disloyal persons made their rendezvous in the neighborhood.

He replied that he had no force to arrest them, and before it could be done he would have to send to Washington or Baltimore for a force. The provost-marshal was confined to his bed by sickness.

Under the present circumstances it is, in my opinion, important that there should be a sufficient force at hand to meet these occasions.

I have the honor to be, with great respect, your obedient servant,

ANDW. A. HARWOOD,
Commodore, Commanding Potomac Flotilla.

Hon. GIDEON WELLES,
Secretary of the Navy.

Report of Commodore Harwood, U. S. Navy, commanding Potomac Flotilla, transmitting report regarding the unprotected condition of the eastern shore of Virginia.

POTOMAC FLOTILLA,
Navy Yard, Washington, October 10, 1863.

SIR: I enclose herewith a copy of a letter from Acting Rear-Admiral Lee in answer to some information recently sent by me in relation to the movements in the neighborhood of the Piankatank River.

I would beg leave to draw the attention of the Department to the eastern shore of Virginia as being neither within the jurisdiction of Acting Rear-Admiral Lee nor of myself. In fact, having the guard of the paroled prisoners at Point Lookout and the blockade of the Piankatank and Rappahannock rivers, I can not at present spare more than one of the sailing schooners to guard the eastern shore.

The *William Bacon* will be ready soon for service and can be sent there if the Department approves.

I have the honor to be, with great respect, your obedient servant,

ANDW. A. HARWOOD,
Commodore, Commanding Potomac Flotilla.

Hon. GIDEON WELLES,
Secretary of the Navy.

[Enclosure.]

U. S. FLAGSHIP MINNESOTA,
Off Newport News, Va., October 8, 1863.

COMMODORE: I have duly received your letters of October 1 and 5, and thank you for the information they contain.

The attention of the senior officer of this squadron in Chesapeake Bay (Lieutenant-Commander J. H. Gillis) has been called to your suggestions, and he has been required to see that all due vigilance is exercised.

Measures will be taken to destroy the boats on wheels about the Piankatank, if possible.

Before the receipt of your letter of the 1st, the operations in and outside of the bay of a party of rebels from Mathews County had been reported to me, and these reports have been confirmed by the Richmond papers. They captured and turned adrift several schooners on the Atlantic side of the eastern shore and returned in one to Milford Haven, where on being pressed by a blockader (probably from the Potomac Flotilla), she was run ashore and burned, as you state.

I would observe that neither the Piankatank nor the eastern shore, under my instructions, is included within the limits of this squadron, whose blockade begins from the "south side of the Piankatank."

I have got all the force I can possibly spare for that purpose in the Chesapeake, including some vessels sadly in need of repairs.

We are very weak on this, as indeed on all other parts of the blockade.

I have the honor to be, respectfully, yours,

S. P. LEE,
Acting Rear-Admiral, Comdg. North Atlantic Blockading Squadron.

Commodore A. A. HARWOOD,
Commanding Navy Yard, Washington, D. C.

Letter from the Secretary of the Navy to Commodore Harwood, U. S. Navy, commanding Potomac Flotilla, regarding the eastern shore of Virginia.

NAVY DEPARTMENT, *October 14, 1863.*

SIR: I have received your No. 356, and have instructed Acting Rear-Admiral Lee to consider the eastern shore of Virginia as within the limits of his command.

Very respectfully, etc.,

GIDEON WELLES,
Secretary of the Navy.

Commodore A. A. HARWOOD,
Commanding Potomac Flotilla, etc., Washington.

Report of Lieutenant-Commander Magaw, U. S. Navy, commanding First Division Potomac Flotilla, transmitting weekly statement of location of vessels.

U. S. S. COMMODORE READ,
Point Lookout, Md., October 11, 1863.

SIR: I respectfully enclose the report of stations (for the coming week) of vessels of the flotilla.

Everything is going on well, except we have hardly a sufficient number of vessels to guard the Potomac strictly. Four are required on Station H, two at Point Lookout, which leaves some of the stations almost unwatched.

I have the honor to be your servant, etc.,

SAML. MAGAW,
Lieutenant-Commander.

Commodore A. A. HARWOOD,
Commanding Potomac Flotilla.

[Enclosure.]

Weekly report of the location of the vessels of the First and Second Divisions of the Potomac Flotilla, Commodore A. A. Harwood, commanding, for the week ending (Sunday) October 11, 1863.

Name.	Station.	Remarks.
Mortar A. Hugel (guard)	A	For the week ending October 19, 1863.
Teaser	A and B	
Dragon	C	
Cœur de Lion	C	
Primrose	F	
Sophronia (guard)	F	
Freeborn	G	
Jacob Bell	G	
Currituck	H	
Anacostia	H	
Fuchsia	H	
Resolute	H	
Yankee	Navy yard	
Tulip	do	
Bacon	do	
Commodore Read	At large	
Wyandank		Distributing stores.

No vessel on station D or E, but the Primrose will cruise up E and the Cœur de Lion down D daily.

List of stations.

Station A.—Alexandria to Indian Head.
Station B.—Indian Head to Liverpool Point.
Station C.—Liverpool Point to Pope's Creek, Maryland.
Station D.—Pope's Creek, Maryland, to Wicomico River.
Station E.—Wicomico River to Breton's Bay.
Station F.—Breton's Bay to St. George's Island.
Station G.—St. George's Island to Smith's Point, Virginia.
Station H.—Smith's Point to "south entrance of the Piankatank, including that river as well as the Rappahannock."

S. MAGAW.

Report of Commodore Harwood, U. S. Navy, commanding Potomac Flotilla, transmitting report of movements in the Piankatank River, Virginia.

POTOMAC FLOTILLA,
Navy Yard, Washington, October 12, 1863.

SIR: From Acting Volunteer Lieutenant Hooker I have advices from the Lower Potomac up to the 9th instant.

It seems that many refugees are now making their way from Virginia, mostly women and children, the men having been either drafted or forced to go into the rebel Army, thus leaving the remainder of the population on the northern neck almost, and in some instances [entirely], destitute and at the mercy of the conscription officers, from whom suspected persons are receiving grievous misusage.

Several women and children have come out to our gunboats and have been turned over to the provost-marshal at Point Lookout by Acting Volunteer Lieutenant Hooker.

I enclose a copy of a letter received yesterday from Acting Volunteer Lieutenant Hooker.

The firing, I presume, was from the expedition sent to destroy the "boats on wheels" below the mouth of the Piankatank.

I have the honor to be, with great respect, your obedient servant,

ANDREW A. HARWOOD,
Commodore, Commanding Potomac Flotilla.

Hon. GIDEON WELLES,
Secretary of the Navy.

[Enclosures.]

U. S. S. CURRITUCK,
Rappahannock River, October 7, 1863.

SIR: I have the honor to report that I arrived here yesterday (October 6), and, in accordance with your orders, assumed the command of the ship.

Acting Master Provost makes a verbal report to me that on Monday three steamers—one a transport and the others gunboats—came up from the bay below to where the *Young Rover* is stationed; that one of the gunboats and the transport subsequently entered Piankatank. A gun was soon afterwards fired by them, when the remaining gunboat (a ferryboat) returned down the bay. During the night heavy firing was heard in the direction of the creeks below the Piankatank. At the same time an unusual amount of signalizing was going on upon the banks of this river, which was, however, soon stopped by a few shells from the *Anacostia.*

For the past few nights I have kept a vessel near the light-ship, which is but poorly protected, having no arms for her own crew and a guard of only seven soldiers. The remaining vessels I keep underway.

Very respectfully, your obedient servant,

EDW. HOOKER,
Actg. Vol. Lieut., U. S. Navy, Comdg. 2d Div. Potomac Flotilla.

Commodore A. A. HARWOOD, U. S. Navy,
Commanding Potomac Flotilla.

U. S. S. CURRITUCK,
Rappahannock River, October 9, 1863.

SIR: I have the honor to report that last night about dusk a Mrs. Smith, with three small children and her brother, a lad of about 15 years, came alongside the *Resolute* and were received on board. As the *Resolute* was detailed to cruise near the light-ship last night, I ordered her to proceed to Point Lookout this morning and deliver the refugees to the provost-marshal at that point, which she did, also communicating with Lieutenant-Commander Magaw, and bringing back dispatches from you.

Also, that this morning soon after daylight a Mrs. Morse, of Carter's wharf, with four small children, came alongside the *Tulip* and were received on board. I send them to the point by the *Tulip*, which goes up to-night in accordance with orders.

Both these women represent that their husbands were forced to leave their homes at the first outbreak of the war, and that they had remained,

hoping to hold their property, but are now obliged to relinquish it on account of apprehended maltreatment by detectives looking after conscripts, deserters, and the property of Union persons, from whom they state suspected persons are receiving grievous misusage.

Very respectfully, your obedient servant,

EDWARD HOOKER,
Actg. Vol. Lieut., U. S. Navy, Comdg. 2d Div. Potomac Flotilla.

Commodore A. A. HARWOOD, U. S. Navy,
Commanding Potomac Flotilla.

Report of Acting Volunteer Lieutenant Hooker, U. S. Navy, commanding Second Division Potomac Flotilla, regarding schooner George Washington, of Baltimore.

U. S. S. CURRITUCK,
Rappahannock River, October 9, 1863.

SIR: I have also to report that this afternoon a schooner was discovered entering this river having on a deck load of wood.

I got underway, and bringing her under my guns boarded her. She proved to be the *George Washington*, of Baltimore, loaded with wood for the quartermaster's department at Fortress Monroe, and claimed to have come in for a harbor. The weather being fine, the wind light, and water smooth, and no necessity that I could discern for making a harbor, I ordered her away, and sent the *Resolute* to see her out of the river.

Very respectfully, your obedient servant,

EDWARD HOOKER,
Actg. Vol. Lieut., U. S. Navy, Comdg. 2d Div. Potomac Flotilla.

Commodore A. A. HARWOOD, U. S. Navy,
Commanding Potomac Flotilla.

Report of Acting Master Street, U. S. Navy, commanding U. S. S. Fuchsia, of boat expedition to Windmill Point, Va.

U. S. S. FUCHSIA,
Station H, off Windmill Point, Va., October 12, 1863.

SIR: I would respectfully report that I to-day, in company with Acting Master [James C.] Tole, of the *Resolute*, landed on Windmill Point, Va., with two armed boats' crews, for the purpose of ascertaining if there were any armed forces at or near this place, as well as to find out from citizens on shore, whom I knew, if any boats had entered the various creeks above this point recently, carrying contraband goods, as I was informed yesterday by the captain of a schooner who came in for a harbor that he saw a boat standing out of Fleets Bay and across the Chesapeake in the morning. Taking with me as a guide W. C. Ingram, I proceeded about 1½ miles inland, visiting several houses and learned that there were no rebel forces in the county, nor had there been any for a long time. I was informed that small boats did frequently enter the creeks out of Fleets Bay, of which there are four. I believe, sir, it would be of vast importance to the Government to have a vessel stationed in the above bay, not only to prevent smuggling, but

to break up a long-existing communication between the eastern and western shores of the Chesapeake Bay, and also that a frequent communication on shore under the charge of a discreet officer would lead to important results.

I am, sir, your most obedient servant,

WM. TELL STREET,
Acting Master, Commanding.

Acting Master N. PROVOST,
Commanding U. S. S. Anacostia and Senior Officer Present.

Letter from provost-marshal-general of Maryland to Commodore Harwood, U. S. Navy, commanding Potomac Flotilla, regarding shipment of cattle for use of the Confederate Army.

BALTIMORE, *October 17, 1863.*

SIR: I have received the following information which I believe to be reliable:

Cattle are being taken from the northern neck of Virginia and shipped from Union wharf and Rappahannock Ferry in flatboats to Tappahannock for the rebel Army.

About 100 soldiers of the rebel Army in Federal uniforms are at Nomini Creek, on the Potomac, surveying the creek for some purpose; it is thought by my informant that they have designs on some of our gunboats.

In Westmoreland County a company of home guards are enforcing the rebel conscription and sending them to Warsaw, Richmond County, for transportation to Richmond City, via Tappahannock Ferry. Henry Taylor, of Oak Grove, Westmoreland County, commands this company.

The following men living near Warsaw Court-House, engaged in enforcing the conscription, are rebels who should be attended to: James Garland, Benjamin Powell, Ijams Montgomery, Ictho Montgomery, Judson Montgomery (a paroled prisoner), Wensel Clark, Dr. Pendleton (clerk of court at Warsaw Court-House), Lemuel Bell (a lawyer), and John Braxton, a rebel guide.

The following Union men may be found in same vicinity: R. B. Stewart, 3 miles east of Warsaw; Jacob Gardy, James Gallagher (a little Irishman), and Daniel Garland. All may be used confidentially.

Hoping this information may be useful, I remain, yours, etc.,

J. L. MCPHAIL,
Provost-Marshal-General, State of Maryland.

Commodore A. A. HARWOOD,
Commanding Potomac Flotilla, Navy Yard, Washington, D. C.

Report of Commodore Harwood, U. S. Navy, Commanding Potomac Flotilla, regarding condition of affairs in the Potomac River.

COMMANDANT'S OFFICE, NAVY YARD,
Washington, October 19, 1863.

SIR: In relation to the movements of the flotilla for the past week I have only to report that Lieutenant-Commander Magaw writes on the 15th instant: "No sign of an enemy along the line and little [or] no blockade running." A few nights ago the *Cœur de Lion* found a couple of trunks containing women's clothing (mourning), made up. They are

not of sufficient value to pay the cost of adjudication, but will be sent to the yard and stored until it shall be determined what is to be done in this and similar cases.

I have the honor to be, with great respect, your obedient servant,

ANDW. A. HARWOOD,
Commodore, Commanding Potomac Flotilla.

Hon. GIDEON WELLES,
Secretary of the Navy.

Report of Commodore Harwood, U. S. Navy, commanding Potomac Flotilla, transmitting weekly statement of location of vessels of the Second Division.

POTOMAC FLOTILLA,
Navy Yard, Washington, October 21, 1863.

SIR: I enclose herewith a copy of the weekly report of the location of the Second Division of the Potomac Flotilla (that of the First Division has not reached me).

Acting Volunteer Lieutenant Hooker's letter accompanying the report contains no material intelligence except that the *Resolute*, Acting Master Tole, ran aground on the 14th instant and remained in that situation for more than three tides. The force of three steamers was required to get her off, in doing which the *Resolute* was much strained and is leaking badly.

Further particulars will be forwarded to the Department as soon as the result of the survey and board of enquiry ordered in the case shall be received.

I have the honor to be, with great respect, your obedient servant,

ANDW. A. HARWOOD,
Commodore, Commanding Potomac Flotilla.

Hon. GIDEON WELLES,
Secretary of the Navy.

[Enclosure.]

Weekly report of the location of the vessels of the Second Division of the Potomac Flotilla, Commodore A. A. Harwood, commanding, for the week ending Saturday, October 17, 1863.

Name.	Station.	Remarks.
Currituck	H	Coaled first part of the week.
Anacostia	H	Will coal next week.
Fuchsia	H	Coaled middle of week and will coal again next week.
Resolute	H	Coaling and aground nearly all the week.
Jacob Bell	G	On guard at Point Lookout.
Thomas Freeborn	G	Do.
Sophronia	F	Guard ship at Piney Point.

List of stations.

Station A.—Alexandria to Indian Head.
Station B.—Indian Head to Liverpool Point.
Station C.—Liverpool Point to Pope's Creek, Maryland.
Station D.—Pope's Creek, Maryland, to Wicomico River.
Station E.—Wicomico River to Breton's Bay.
Station F.—Breton's Bay to St. George's Island.
Station G.—St. George's Island to Smith's Point, Virginia.
Station H.—Smith's Point to "south entrance of the Piankatank, including that river as well as the Rappahannock."

EDW. HOOKER,
Acting Volunteer Lieutenant, U. S. Navy, Comdg. Second Division Potomac Flotilla.

Weekly report of the location of the vessels of the [First] Division of the Potomac Flotilla, Commodore A. A. Harwood, commanding, for the week ending Monday, October 19, 1863.

Name.	Station.	Remarks.
A. Hugel (guard)	A	
Teaser	B and C	
Dragon	C	
Cœur de Lion	D	
Primrose	E and F	
Sophronia (guard)	F	
Freeborn	G	Point Lookout.
Resolute	G	Do.
Currituck	H	
Anacostia	H	
Fuchsia	H	
Yankee	At the yard	Under repair.
Jacob Bell	do	Repair to rudder.
Tulip	do	Steam drum being fitted.
William Bacon	do	
Wyandank	At large	After distributing stores, Station A.
Commodore Read	do	Do.

Owing to the small force we have at present afloat this is the best distribution I can make.

List of stations.

Station A.—Alexandria to Indian Head.
Station B.—Indian Head to Liverpool Point.
Station C.—Liverpool Point to Pope's Creek, Maryland.
Station D.—Pope's Creek, Maryland, to Wicomico River.
Station E.—Wicomico River to Breton's Bay.
Station F.—Breton's Bay to St. George's Island.
Station G.—St. George's Island to Smith's Point, Virginia.
Station H.—Smith's Point to "south entrance of the Piankatank, including that river, as well as the Rappahannock."

Respectfully, etc.,

SAMUEL MAGAW,
Lieutenant-Commander.

Order of the Secretary of the Navy to Commodore Harwood, U. S. Navy, commanding Potomac Flotilla.

NAVY DEPARTMENT, *October 23, 1863.*

SIR: A report every fortnight of the locations of the vessels of the Potomac Flotilla will be sufficient for the Department's use.

Very respectfully, etc.,

GIDEON WELLES,
Secretary of the Navy.

Commodore A. A. HARWOOD,
Commandant, Navy Yard, Washington.

Report of Commodore Harwood, U. S. Navy, commanding Potomac Flotilla, transmitting certificate of capture of steamer Three Brothers.

POTOMAC FLOTILLA,
Navy Yard, Washington, October 24, 1863.

SIR: Herewith enclosed you will find certificate of capture of the stern-wheel steamer *Three Brothers*, made on the 21st instant by the U. S. steamers *Currituck* and *Fuchsia*, for violating the blockade of the Rappahannock River, under pretense of making a harbor.

The vessel and crew have been placed in the hands of the prize commissioners.

I have the honor to be, with great respect, your obedient servant,

ANDW. A. HARWOOD,
Commodore, Commanding Potomac Flotilla.

Hon. GIDEON WELLES,
Secretary of the Navy.

[Enclosure.]

Potomac Flotilla.—Certificate of capture.

Name and character of the prize.—Stern-wheel steamer *Three Brothers.* Crew: Frank Shannon, captain; Charles Early, mate; John Lynch, engineer; John Smith, deck hand; William Butler (colored), steward; John Lewis (colored), fireman.

By whom and by what vessel capture made.—Currituck and *Fuchsia.*

When capture made.—October 21, 1863.

Where and for what reasons.—Rappahannock River, Virginia; for want of proper papers and suspicious movements.

The cargo, if any on board.—None.

What papers found.—No. 4, license; No. 3, enrollment; No. 6, Potomac pass to New York; No. 5, manifest; No. 1, watch bill suggestive of military organization; No. 2, letter from A. Leary, New York, to Captain Shannon.

Remarks.—This vessel was seen coming into the mouth of Rappahannock River this p. m. under pretense of a harbor. The captain states that he cleared from Washington for New York, but had lost his clearance and manifest, and was now bound to Hampton Roads. Having no permit or clearance for that place, and being entirely out of his course for New York, which would be by way of canals, etc., I have made the seizure. Since these papers were filled out, the captain has produced a manifest and clearance for New York.

OCTOBER 21, 1863.

I hereby certify that the above-mentioned stern-wheel steamer *Three Brothers* was captured by the undersigned, commanding the U. S. S. *Currituck*, of the Potomac Flotilla, at the time and place above designated, and that the above and annexed statement is true in every particular.

EDWARD HOOKER,
Acting Volunteer Lieutenant, U. S. Navy.

Report of Commodore Harwood, U. S. Navy, commanding Potomac Flotilla, transmitting report of Confederate movements on the peninsula.

POTOMAC FLOTILLA,
Navy Yard, Washington, October 31, 1863.

SIR: I enclose herewith a copy of the report of Acting Volunteer Lieutenant Edward Hooker, containing information of the position of parties of the rebel cavalry on the peninsula, and of other movements which the Department should know.

As the Department some time since directed that no force should go up the Rappahannock without its sanction, I beg leave to refer to its consideration the proposition of Acting Volunteer Lieutenant Hooker,

to examine the creek near the Piankatank for boats. He is a judicious officer, and I think may be trusted to make a reconnoissance, at least to ascertain the position of Lieutenant Wood's boat.

I have the honor to be, with great respect, your obedient servant,

ANDW. A. HARWOOD,
Commodore, Commanding Potomac Flotilla.

Hon. GIDEON WELLES,
Secretary of the Navy, Navy Department.

[Enclosure.]

U. S. S. CURRITUCK,
Off Point Lookout, October 28, 1863.

SIR: I have information from Tolus Key [Totouskey] Bridge, Richmond County, Va., to 3 a. m. the 27th instant. At that time the bridge was the headquarters of 200 cavalry, under a Captain Eastman (and it was believed that there were others near there). From thence they sent out detachments to different points upon the peninsula. From other sources I am informed that a party of them were at Smith's Point light-house a few days since. Coming up from Station H, I visited Fresleys [Presley's] Creek (across from Point Lookout), in quest of a blockade runner who I had reason to believe was there, and learned that a squad of twelve or more of the cavalry were at that point a few hours previously.

I have information also of a small body of cavalry south of the Rappahannock, whose scouting extends to the peninsula between the Rappahannock and Piankatank rivers.

The ostensible purpose is conscripting and deserter hunting. Foraging may be included, although I have not learned that they have practiced it as yet.

I can not think this of importance enough to employ so large a body of men in a region so depleted, and opine that it may be to cover another aquatic raid, the point to be the upper Potomac or possibly through Coan River to Point Lookout.

I can learn nothing definite of the whereabouts of Lieutenant Wood and party, but have reason to believe that a part of his boats are secured at or near Slums Creek (I think it is called), off the Piankatank. I would like to examine that creek for them.

I learn, further, that the mail communications in Virginia are stopped by orders from Richmond; also a rumor that large bodies of troops are passing through Richmond southward.

Very respectfully, your obedient servant,

EDWARD HOOKER,
Actg. Vol. Lieut., U. S. Navy, Comdg. 2d Div. Potomac Flotilla.

Commodore A. A. HARWOOD, U. S. Navy,
Commanding Potomac Flotilla.

Report of Acting Master Street, U. S. Navy, commanding U. S. S. Fuchsia, of the capture of two blockade runners and contraband goods.

U. S. S. FUCHSIA,
Rappahannock River, Virginia, October 31, 1863.

SIR: I would respectfully report that I last night arrested two blockade runners at the house of Mr. Lee, living on Diamond [Dimer's?] Creek,

named Edward Thornton and Robert Taylor, both residents of Accomac County, Va., eastern shore. I also seized a large canoe, with two sails, belonging to the above. On searching the house, a box of medicines, 2 pieces of cloth, 4 hats, 2 barrels and 2 sacks of salt [were] found. Mr. Lee is a regular dealer in blockade goods, and acknowledged to having sold a large quantity but a few days before.

Mr. [Eli D.] Edmunds, of the *Anacostia*, with a boat's crew, accompanied me.

Very respectfully,

WM. TELL STREET,
Acting Master, Commanding.

Acting Volunteer [Lieutenant] EDWARD HOOKER,
Commanding Second Division Potomac Flotilla.

Report of Acting Master Street, U. S. Navy, commanding U. S. S. Fuchsia, of the capture of a Confederate soldier.

U. S. S. FUCHSIA,
Rappahannock River, Virginia, October 31, 1863.

SIR: On landing to-day at Tapp's Creek, I took Thomas Harris, belonging to the Fifty-fifth Virginia Regiment, a prisoner. He has been nearly three years in the service. Could not hear of any cavalry in the county.

I am, sir, your obedient servant,

WM. TELL STREET,
Acting Master, Commanding.

Acting Volunteer Lieutenant EDWARD HOOKER,
Commanding Second Division Potomac Flotilla.

Letter from Commodore Harwood, U. S. Navy, commanding Potomac Flotilla, to Acting Volunteer Lieutenant Hooker, U. S. Navy, commanding Second Division, regarding search for Confederate force commanded by Lieutenant Wood, C. S. Navy.

POTOMAC FLOTILLA,
Navy Yard, Washington, November 2, 1863.

SIR: Your letter of 28th instant, in relation to the position of the rebel cavalry on the peninsula, has been received and a copy has been forwarded to the Department.

The question of looking into Hurd's Creek for the rebel boats commanded by Lieutenant Wood has also been submitted to the Department, and further instructions will be sent you as soon as I receive a reply.

An attempt was made some time since by an officer commanding one of the North Atlantic Blockading Squadron in the same quarter for the same purpose, who was killed by a party in ambush.

All such expeditions should be planned after reliable information as to the force of the enemy, with an adequate force and for an adequate end.

You will, I am assured, endeavor to obtain the necessary information, and if authorized to act, proceed prudently and well prepared.

Very respectfully, your obedient servant,

ANDREW A. HARWOOD,
Commodore, Commanding Potomac Flotilla.

Acting Volunteer Lieutenant E. HOOKER,
Commanding Second Division Potomac Flotilla.

Order of the Secretary of the Navy to Commodore Harwood, U. S. Navy, commanding Potomac Flotilla.

NAVY DEPARTMENT, *November 4, 1863.*

SIR: Your letter of the 31st ultimo, with enclosure, has been received. The Department approves of the suggestion of Acting Volunteer Lieutenant Edward Hooker, and authorizes him to examine the creek near the Piankatank River, for the purpose indicated.

Very respectfully,

GIDEON WELLES,
Secretary of the Navy.

Commodore A. A. HARWOOD,
Commandant of the Navy Yard, Washington, D. C.

Order of Commodore Harwood, U. S. Navy, commanding Potomac Flotilla, to Acting Volunteer Lieutenant Hooker, U. S. Navy, commanding Second Division, to proceed in search of the boats commanded by Lieutenant Wood, C. S. Navy.

POTOMAC FLOTILLA,
Navy Yard, Washington, November 16, 1863.

SIR: You are authorized to examine the creek near the Piankatank River mentioned in your letter of the 28th ultimo, for the purpose of discovering the boats supposed to be concealed there.

I refer you to my letter of the 2d instant upon this subject and leave the rest to your sound discretion.

Very respectfully, your obedient servant,

ANDREW A. HARWOOD,
Commodore, Commanding Potomac Flotilla.

Acting Volunteer Lieutenant EDWARD HOOKER,
Commanding Second Division Potomac Flotilla.

[Telegram.]

NAVY YARD, WASHINGTON, *November 18, 1863.*
(Received 10:50 a. m.)

The officer commanding at the mouth of the Rappahannock, Acting Volunteer Lieutenant Edward Hooker, has intelligence of a sloop in Corrotoman Bay, about 15 miles above the mouth of the river. She is actively engaged in the contraband business, and he wishes to obtain permission to go in search of her. The existing order of the Department forbids it. Please send an answer, as I am about to send dispatches to flotilla.

ANDREW A. HARWOOD.

SECRETARY OF THE NAVY.

[Telegram.]

NAVY DEPARTMENT, *November 18, 1863.*

A special expedition is allowed for the object mentioned in your telegram of this date.

GIDEON WELLES.

Commodore A. A. HARWOOD,
Commandant Navy Yard, Washington.

Order of Commodore Harwood, U. S. Navy, commanding Potomac Flotilla, to Acting Volunteer Lieutenant Hooker, U. S. Navy, commanding Second Division, to proceed to Corrotoman Bay.

POTOMAC FLOTILLA,
Navy Yard, Washington, November 18, 1863.

SIR: You are authorized to make a special expedition to Corrotoman Bay for the purpose of capturing any blockade runners that may be sheltered there.

You will send an adequate force under reliable officers.

Very respectfully,

ANDREW A. HARWOOD,
Commodore, Commanding Potomac Flotilla.

Acting Volunteer Lieutenant EDWARD HOOKER,
Commanding Second Division Potomac Flotilla.

Report of Acting Volunteer Lieutenant Hooker, U. S. Navy, commanding Second Division Potomac Flotilla, regarding conditions in the Piankatank River.

U. S. S. CURRITUCK,
Off Point Lookout, Md., November 18, 1863.

SIR: I acknowledge receipt of engineer's appointment [for] J. T. Buckley, and enclose herewith letter of acceptance and oath of Mr. B., envelope and report of Acting Master Provost on capture of revenue officer, with accompanying letter of the lieutenant commanding revenue steamer *Hercules*.

I have visited the Piankatank, and although there is much that is suspicious, I have not yet deemed my information positive enough to warrant me in sending my boats out of range of my guns.

I have information from contrabands that the movement of forage has commenced from points near the mouth of the Rappahannock. With your permission I will endeavor to intercept and destroy it.

The donkey pump of the *Anacostia* has given out entirely. She keeps her boilers up by keeping her engine moving, but will have to go for water, which she has heretofore condensed.

The *Tulip* has carried away the batten of her main channels (the captain says in getting out of dock at the yard); if you will send me a 3-inch oak plank and a few 8-inch spikes I can repair it.

During the dark and stormy weather lately I have had much trouble in keeping underway at night on account of my compasses, which are affected by the iron around the wheelhouse. To remedy this I propose to put a binnacle on the poop deck well aft and shall go into St. Mary's River to-day to swing ship and verify a compass at that part of the ship.

Very respectfully, yours, etc.,

E. HOOKER.

Commodore HARWOOD.

Report of Commodore Harwood, U. S. Navy, commanding Potomac Flotilla, regarding examination of places near the mouth of Rappahannock River.

POTOMAC FLOTILLA,
Navy Yard, Washington, November 18, 1863.

SIR: Acting Volunteer Lieutenant Hooker, who is in command of the division of the flotilla, Station H, at the mouth of the Rappahan-

nock, has written to me, to request that the restrictions with regard to examination of places near the mouth of the river may be removed to some extent or modified.

After a conversation with an officer just from Station H, I am convinced that advantage is taken of the supposed inactivity of the flotilla to pass goods over from Corrotoman Bay across the Rappahannock.

I have great confidence in the judgment and vigilance of Mr. Hooker, and would recommend that he be permitted to act at discretion, provided he confines his operations to places below Urbana.

I have the honor to be, with great respect, your obedient servant,

ANDW. A. HARWOOD,
Commodore, Commanding Potomac Flotilla.

Hon. GIDEON WELLES,
Secretary of the Navy.

Instructions from the Secretary of the Navy to Commodore Harwood, U. S. Navy, commanding Potomac Flotilla, regarding examination of places on the Rappahannock River.

NAVY DEPARTMENT, *November 21, 1863.*

SIR: The Department has received your No. 410, and approves of your recommendation that Acting Volunteer Lieutenant Hooker be allowed to exercise his discretion with regard to examining places near the mouth of the Rappahannock, provided they are below Urbana, and precise written instructions for his guidance are furnished.

Very respectfully,

GIDEON WELLES,
Secretary of the Navy.

Commodore A. A. HARWOOD,
Commanding Potomac Flotilla, Washington.

Order of Commodore Harwood, U. S. Navy, commanding Potomac Flotilla, to Acting Volunteer Lieutenant Hooker, U. S. Navy, commanding Second Division, for the examination of places near the mouth of Rappahannock River.

POTOMAC FLOTILLA,
Navy Yard, Washington, November 23, 1863.

SIR: You are allowed to exercise your discretion with regard to examining places near the mouth of the Rappahannock, provided the examination is made below Urbana.

You will consult with Lieutenant-Commander Magaw both as to expediency of each examination and the best means of carrying it out.

The object must in all cases be an adequate one, and the means employed adequate also.

Much must necessarily be left to your discretion, in which I have confidence.

Very respectfully, your obedient servant,

ANDREW A. HARWOOD,
Commodore, Commanding Potomac Flotilla.

Acting Volunteer Lieutenant EDWARD HOOKER, U. S. Navy,
Commanding Second Division Potomac Flotilla.

Weekly report of the location of the vessels of the First Division of the Potomac Flotilla, Commodore A. A. Harwood, commanding, for the week ending November 21, 1863.

Name.	Station.	Remarks.
A. Hugel (guard)	A	
Wyandank	A and B	
Resolute	C	
Dragon	C and D	
Yankee	D and E	
Sophronia (guard)	F	
Jacob Bell	G	
Cœur de Lion	G	
Eureka	Nanjemoy Creek	
Primrose	Navy yard	
Freeborn	do	
Fuchsia	do	
Commodore Read	At large	

List of stations.

Station A.—Alexandria to Indian Head.
Station B.—Indian Head to Liverpool Point.
Station C.—Liverpool Point to Pope's Creek, Maryland.
Station D.—Pope's Creek, Maryland, to Wicomico River.
Station E.—Wicomico River to Breton's Bay.
Station F.—Breton's Bay to St. George's Island.
Station G.—St. George's Island to Smith's Point, Virginia.
Station H.—Smith's Point to "south entrance of the Piankatank, including that river, as well as the Rappahannock."

SAML. MAGAW,
Lieutenant-Commander.

Weekly report of the location of the vessels of the Second Division of the Potomac Flotilla, Commodore A. A. Harwood, commanding, for the week ending Saturday, November 21, 1863.

Name.	Station.	Remarks.
Currituck	H	Latter part of the week cleaning and repairing boiler and engine; watering and coaling at Piney Point.
Anacostia	H	Will have to coal next week.
Tulip	H	Do.
Jacob Bell	G	
Cœur de Lion	G	
Sophronia	F	Guard ship.

List of stations.

Station A.—Alexandria to Indian Head.
Station B.—Indian Head to Liverpool Point.
Station C.—Liverpool Point to Pope's Creek, Maryland.
Station D.—Pope's Creek, Maryland, to Wicomico River.
Station E.—Wicomico River to Breton's Bay.
Station F.—Breton's Bay to St. George's Island.
Station G.—St. George's Island to Smith's Point, Virginia.
Station H.—Smith's Point to "south entrance of the Piankatank, including that river as well as the Rappahannock."

Very respectfully, your obedient servant,

EDW. HOOKER,
Acting Volunteer Lieutenant, U. S. Navy, Comdg. Second Division Potomac Flotilla.

Report of Commodore Harwood, U. S. Navy, commanding Potomac Flotilla, regarding boat expedition for the capture of blockade runners and deserters on St. George's Island.

POTOMAC FLOTILLA,
Navy Yard, Washington, December 1, 1863.

SIR: Acting Volunteer Lieutenant Edward Hooker having learned that a number of rebels had assembled on St. George's Island, at the mouth of the St. Mary's River, informed Brigadier-General Marston of the circumstance. Eighty five soldiers were detailed by the general, under the command of Assistant Adjutant-General [Center H.] Lawrence, 50 of whom were embarked on board the *Jacob Bell*, Acting Master Schulze, and the rest in an army tug.

In the afternoon of the 22d, guard boats being placed at the north of the island to prevent the rebel party from escaping, the soldiers were landed and commenced a search of the island which lasted until morning, the *Jacob Bell* being anchored during the night on the south side of the island to prevent an escape into Virginia.

The next morning by 11 o'clock 63 persons were taken, of whom the assistant adjutant-general discharged 32. The remaining 31, consisting of rebel deserters and blockade runners, were taken to Point Lookout and are in the possession of the army authorities.

In this expedition Rudolph Kaiser, a seaman of the *Jacob Bell*, unfortunately fell out of a boat and was drowned. Not being able to swim, he rose to the surface but once and lost hold of the oar extended for his relief.

I enclose herewith a certificate of his death.

I have the honor to be, with great respect, your obedient servant,

ANDW. A. HARWOOD,
Commodore, Commanding Potomac Flotilla.

Hon. GIDEON WELLES,
Secretary of the Navy.

Report of Commodore Harwood, U. S. Navy, commanding Potomac Flotilla, transmitting journal of prisoners escaped from Castle Thunder, Richmond, Va.

NAVY YARD, WASHINGTON, *December 4, 1863.*

SIR: I enclose a journal* of eight of the prisoners who recently escaped from Castle Thunder, Richmond, Va.

They were picked up by the *Anacostia* a few miles above the mouth of the Rappahannock River [November 22, 1863].

I have the honor to be, with great respect, your obedient servant,

ANDW. A. HARWOOD,
Commodore, Commanding Potomac Flotilla.

Hon. GIDEON WELLES,
Secretary of the Navy.

---

* Not necessary to publish.

Report of Commodore Harwood, U. S. Navy, commanding Potomac Flotilla, of the capture of three blockade runners.

POTOMAC FLOTILLA,
Navy Yard, Washington, November 24, 1863.

SIR: I have to report the capture of three blockade runners, with memoranda indicating that one of them is connected with the rebel Army, viz:

Thomas N. Holliday, Company K, Fortieth Virginia (rebel) Regiment; John J. Booth, Ezekiel W. Brain.

They have been turned over to the provost-marshal of the military district of Washington.

I have the honor to be, with great respect, your obedient servant,

ANDW. A. HARWOOD,
Commodore, Commanding Potomac Flotilla.

Hon. GIDEON WELLES,
Secretary of the Navy.

Report of Commodore Harwood, U. S. Navy, commanding Potomac Flotilla, of the capture of blockade runners.

POTOMAC FLOTILLA,
Navy Yard, Washington, November 30, 1863.

SIR: I have to report the capture of the blockade runners who were transporting four ladies and two children from Virginia, viz: William Hardman and Selden Keys (both colored). They have all been turned over to the proper military authorities.

I have the honor to be, with great respect, your obedient servant,

ANDW. A. HARWOOD,
Commodore, Commanding Potomac Flotilla.

Hon. GIDEON WELLES,
Secretary of the Navy.

Report of Commodore Harwood, U. S. Navy, commanding Potomac Flotilla, transmitting certificate of capture of schooner F. W. Johnson.

POTOMAC FLOTILLA,
Navy Yard, Washington, December 3, 1863.

SIR: Enclosed I forward for the information of the Navy Department certificate of capture of the schooner *F. U. Johnson*, captured on the 1st instant by the U. S. schooner *A. Hugel*, for a violation of the revenue laws, in having liquors on board not specified in the manifest.

The vessel has been placed in the hands of the prize court, and the crew and passengers in the custody of the provost-marshal.

I have the honor to be, with great respect, your obedient servant,

ANDW. A. HARWOOD,
Commodore, Commanding Potomac Flotilla.

Hon. GIDEON WELLES,
Secretary of the Navy.

[Enclosure.]

Potomac Flotilla.—Certificate of capture.

Name and character of the prize—Schooner *F. U. Johnson*, of Baltimore, Md., Captain William H. Thompson, with sutler's stores; from Georgetown, D. C., bound to Port Royal, S. C.

By whom and by what vessel capture made—S. Nickerson, acting master, commanding U. S. schooner *Adolph Hugel*.

When capture made—December 1, 1863.

Where and for what reasons—Off Alexandria, Va., for having liquors and a large quantity of stores on board not specified on the manifest.

The cargo, if any on board—General.

What papers found—Coasting license, enrollment, coastwise manifest, two charter parties, shipping articles, one package of private papers.

Remarks—Seven passengers: H. W. Ranney, A. Ranney, G. W. Bayer, L. M. Emory, W. F. Clary, Charles Gahghasser, John Masher. The above-named passengers have no passes, and are not mentioned on the manifest or any of the vessel's papers.

DECEMBER 1, 1863.

I hereby certify that the above-mentioned schooner, cargo, and passengers were captured by the undersigned, commanding the U. S. schooner *Adolph Hugel*, of the Potomac Flotilla, at the time and place above designated, and that the above and annexed statement is true in every particular.

S. NICKERSON,
Acting Master, Commanding.

[Telegram.]

NAVY YARD, WASHINGTON, *December 9, 1863.*
(Received 12:15 p. m.)

Can an order be sent down by an army tug to reenforce the number of vessels at Point Lookout? The only vessel I have to send this message by is the *King Philip*, which is wanted to convey the Russian officer to and from Alexandria to-night. The *Ella*, under repairs, will not be ready until to-morrow. Will the Department please instruct me how to proceed?

ANDW. A. HARWOOD,
Commodore.

Hon. SECRETARY OF THE NAVY.

[Telegram.]

NAVY YARD, WASHINGTON, *December 9, 1863.*
(Received 4:35 p. m.)

The *Commodore Read* will leave the yard as soon as she can take in coal enough. She has just arrived. Lieutenant-Commander Magaw will return to Point Lookout and execute your orders of the morning. The *Mount Washington* will not be ready until the 24th, but the *Ella* and *King Philip* will be placed at the disposal of the admiral to take the Members of Congress to the Russian fleet on Saturday.

ANDW. A. HARWOOD,
Commodore.

Hon. GIDEON WELLES,
Secretary of the Navy.

Report of Commodore Harwood, U. S. Navy, commanding Potomac Flotilla, transmitting information of the granting of passes by the commanding officer of revenue steamer Hercules.

NAVY YARD, WASHINGTON, *December 10, 1863.*

SIR: I enclose herewith a letter from Acting Volunteer Lieutenant Edward Hooker in relation to passes and permits reported to be granted by Lieutenant [John G.] Baker, commanding U. S. revenue steamer *Hercules.*

I have the honor to be, with great respect, your obedient servant,

A. A. HARWOOD,
Commodore, Commanding Potomac Flotilla.

Hon. GIDEON WELLES,
Secretary of the Navy.

[Enclosure.]

U. S. S. CURRITUCK,
Rappahannock River, Virginia, December 7, 1863.

SIR: I am informed from a source which I deem worthy of credence that Lieutenant Baker, commanding revenue steamer *Hercules*, is in the habit of granting passes to refugees in Maryland, permitting them to visit their friends in Virginia and return again to Maryland; also permitting them to carry over tea, coffee, sugar, salt, clothing, etc., for the use of persons residing in Virginia.

I have not yet intercepted any of these passes; whenever I do I shall forward them to you.

My informant is a Mr. Evans, whose looks bespeak an upright, honest, and gentlemanly man, and who is well known to the pilots of our vessels, who all speak of him in high terms as a man of integrity and undoubted loyalty.

Very respectfully, your obedient servant,

EDWARD HOOKER,
Actg. Vol. Lieut., U. S. Navy, Comdg. 2d Div. Potomac Flotilla.

Commodore A. A. HARWOOD, U. S. Navy,
Commanding Potomac Flotilla.

Order of the Secretary of the Navy to Commodore Harwood, U. S. Navy, commanding Potomac Flotilla, regarding passes granted by revenue officer.

NAVY DEPARTMENT, *December 14, 1863.*

SIR: Your letter of the 10th instant has been received.

You will instruct the commanding officers of the Potomac Flotilla not to regard any passes or permits such as are reported to have been issued by Lieutenant Baker, of the revenue steamer *Hercules*, and to capture all refugees or other persons attempting to violate the blockade.

A copy of Lieutenant Hooker's letter has been sent to the Secretary of the Treasury.

Very respectfully,

GIDEON WELLES,
Secretary of the Navy.

Commodore A. A. HARWOOD,
Commanding Navy Yard, Washington.

[Telegram.]

NAVY YARD, WASHINGTON, *December 16, 1863.*

Will the Department please give me notice when it wishes the vessels ordered to reenforce the position at Point Lookout to return to their station?

ANDW. A. HARWOOD,
Commodore.

Hon. G. WELLES,
Secretary Navy.

Order of Commodore Harwood, U. S. Navy, commanding Potomac Flotilla, to Acting Volunteer Lieutenant Hooker, U. S. Navy, regarding gunboats at Point Lookout.

POTOMAC FLOTILLA,
COMMANDANT'S OFFICE, NAVY YARD,
Washington, December 18, 1863.

SIR: The reenforcements of gunboats temporarily ordered to take position at Point Lookout will return to their stations.

The usual force will be kept to guard the depot at Point Lookout.

Very respectfully, your obedient servant,

ANDREW A. HARWOOD,
Commodore, Commanding Potomac Flotilla.

Acting Volunteer Lieutenant EDWARD HOOKER, U. S. Navy,
Senior Officer Afloat, Potomac Flotilla.

Order of the Secretary of the Navy to Commodore Harwood, U. S. Navy, commanding Potomac Flotilla, regarding transfer of command.

NAVY DEPARTMENT,
Washington, December 18, 1863.

SIR: On the 31st instant you will transfer the command of the Potomac Flotilla to Commander F. A. Parker, and regard yourself as detached from that duty.

Very respectfully,

GIDEON WELLES,
Secretary of the Navy.

Commodore A. A. HARWOOD,
Commandant Navy Yard, Washington, D. C.

Order of the Secretary of the Navy to Commander Parker, U. S. Navy, to assume command of the Potomac Flotilla.

NAVY DEPARTMENT, *December 18, 1863.*

SIR: You are hereby detached from the navy yard, Washington, on the 23d instant, and you will report to Commodore Harwood on the 31st instant, for the command of the Potomac Flotilla.

I am, respectfully,

GIDEON WELLES.

Commander FOXHALL A. PARKER, U. S. Navy,
Navy Yard, Washington, D. C.

Weekly report of the location of the vessels of the First Division of the Potomac Flotilla, Commodore A. A. Harwood, commanding, for the week ending December 26, 1863.

Name.	Station.	Remarks.
A. Hugel (guard)	A	The steamers have been cruising actively, overlapping their stations in order to communicate with each other, the force not being sufficient to occupy all the stations.
Resolute	B and C	
Dragon	C	
Teaser	D	
Yankee	D and E	
Sophronia (guard)	F	
Cœur de Lion	G	
Jacob Bell	G	
Wyandank		
Commodore Read	At large	

List of stations.

Station A.—Alexandria to Indian Head.
Station B.—Indian Head to Liverpool Point.
Station C.—Liverpool Point to Pope's Creek, Maryland.
Station D.—Pope's Creek, Maryland, to Wicomico River.
Station E.—Wicomico River to Breton's Bay.
Station F.—Breton's Bay to St. George's Island.
Station G.—St. George's Island to Smith's Point, Virginia.
Station H.—Smith's Point to "south entrance of the Piankatank, including that river as well as the Rappahannock."

SAML. MAGAW.

Weekly report of the location of the vessels of the Second Division of the Potomac Flotilla, Commodore A. A. Harwood, commanding, for the week ending on Saturday, December 26, 1863.

Name.	Station.	Remarks.
Currituck	H	
Anacostia	F	Cleansing boiler, etc., at Piney Point all the week.
Tulip	H	Goes up to clean boilers December 28.
Jacob Bell	G	
Cœur de Lion	G	
Sophronia	F	Guard ship at Piney Point.

List of stations.

Station A.—Alexandria to Indian Head.
Station B.—Indian Head to Liverpool Point.
Station C.—Liverpool Point to Pope's Creek, Maryland.
Station D.—Pope's Creeek, Maryland, to Wicomico River.
Station E.—Wicomico River to Breton's Bay.
Station F.—Breton's Bay to St. George's Island.
Station G.—St. George's Island to Smith's Point, Virginia.
Station H.—Smith's Point to "south entrance of the Piankatank, including that river as well as the Rappahannock."

Very respectfully, your obedient servant,

EDWD. HOOKER,
Acting Volunteer Lieutenant, U. S. Navy, Comdg. Second Division Potomac Flotilla.

[Telegram.]

NAVY DEPARTMENT, *December 26, 1863.*

SIR: Reliable information has been received that a large amount of goods are being taken across the Potomac from Breton's Bay to Nomini, and are stored at each place. Take all measures to intercept and capture them.

GIDEON WELLES,
Secretary of the Navy.

Commodore A. A. HARWOOD, U. S. Navy,
Commandant U. S. Naval Station, Washington, D. C.

[Telegram.]

NAVY YARD, WASHINGTON, *December 26* [*1863*].
(Received 11:10 p. m.)

Telegram received. All measures will be promptly taken to intercept and capture the goods mentioned in the dispatch of the Department.

A. A. HARWOOD,
Commodore.

SECRETARY OF THE NAVY.

Report of Commodore Harwood, U. S. Navy, commanding Potomac Flotilla, regarding contraband operations between Breton's Bay and Nomini.

POTOMAC FLOTILLA,
Navy Yard, Washington, December 28, 1863.

SIR: Your telegram was received on Saturday night at 11 p. m. Yesterday all measures in my power were taken to intercept and capture the goods said to be passing over from Breton's Bay to Nomini.

It has been well known to the officers of the flotilla that such contraband operations have been going on, but owing to various impediments it has not been entirely in my power to prevent them.

Among other difficulties, I would mention that it has been thought prudent to restrict the visitation of detachments of the flotilla to the Maryland shore, and I still think that the contrabandists' depots should be watched by the civil and military authorities on that side, and that the operations of the flotilla should as far as possible be restricted to the river.

I have the honor to be, with great respect, your obedient servant,

ANDW. A. HARWOOD,
Commodore, Commanding Potomac Flotilla.

Hon. GIDEON WELLES,
Secretary of the Navy.

Report of Commander Parker, U. S. Navy, commanding Potomac Flotilla, of intended departure down the river.

U. S. S. COMMODORE READ,
Off Alexandria, January 2, 1864.

SIR: I have the honor to inform the Department that I shall proceed down the river in this vessel to-morrow morning.

Very respectfully, your obedient servant,

FOXHALL A. PARKER,
Commander, Commanding Potomac Flotilla.

Hon. GIDEON WELLES,
Secretary of the Navy, Washington, D. C.

Report of Commander Parker, U. S. Navy, commanding Potomac Flotilla, of the arrest of nine persons for violation of blockade.

U. S. S. COMMODORE READ,
Off Alexandria, January 2, 1864.

SIR: I have the honor to report to you that I sent to day to the provost-marshal at Washington nine prisoners, viz: Thomas Mack,

Richard Norton, Isaac Quall (colored), captured December 29 at Plowden's wharf, Wicomico River, they having crossed the night before and being on their way to Baltimore. They were arrested for a violation of the blockade.

The other six were captured by the steamer *Yankee* on the night of the 27th, at Nomini, Va., while attempting to cross to Maryland: William Winfield, in charge; W. H. Thomas, boy, engaged in working boat; S. B. Burrows, first lieutenant rebel Army, Prince George's, Md.; William A. Coalie, of Prince George's, Md., formerly of the rebel Army; Mrs. Mary Davidson, whose husband [is] in the rebel Navy; Mrs. Caroline Mara and child, whose husband is South.

I also sent to the provost-marshal the following documents, money, etc., belonging to the prisoners:

W. Winfield, $55 Confederate money; Mrs. Caroline Mara, bills of exchange on London, legal documents; S. B. Burrows, papers; W. A. Coalie, papers.

A boat landing failed to discover the whereabouts of any goods at Nomini or that region.

There is a sufficient force between Nomini and Breton's Bay to intercept anything that may attempt to cross.

Very respectfully, your obedient servant,

FOXHALL A. PARKER,
Commander, Commanding Potomac Flotilla.

Hon. GIDEON WELLES,
Secretary of the Navy, Washington, D. C.

Report of Acting Volunteer Lieutenant Hooker, U. S. Navy, commanding Second Division Potomac Flotilla, regarding proposed cooperation with the Army in a raid upon the enemy.

U. S. S. CURRITUCK,
Rappahannock River, Virginia, January 3, 1864.

SIR: I this morning received a communication from General Marston, requesting the cooperation of gunboats in a raid which he proposes upon the peninsula between the Potomac and Rappahannock.

The brief time between this and the proposed time of action debars me from consulting with you about it, although in my reply to the general this a. m. I requested him to communicate with you.

As the move is one which I have often urged upon the general, and which I believe to be important, I shall without hesitation cooperate with him, although in so doing I shall take my vessels higher up the Rappahannock than Commodore Harwood had permitted me to go.

I shall be at Point Lookout to-morrow morning and communicate with the general personally, and shall then learn more of his plans than I now know. If thought necessary to increase my force, I shall take one or two of the vessels from up the river, believing that the presence of our forces in Virginia will have the effect of checking any contraband movements across the Potomac. Finally, the movement will prevent me from cleaning the boilers of the *Currituck* until after it is completed. It is now three weeks since cleaning, and the detention will be about a week or ten days longer, but owing to the care which is taken of my boilers I feel no fear of injury to them. I have also consulted with my engineer in charge, and he expresses the same opinion.

After communicating with the general I will advise you of what further information I obtain.

I act in the above matter without first obtaining your permission

only because the time is too short to obtain your advice and consent, and trust that my action will meet your approval.

Very respectfully, your obedient servant,

EDWARD HOOKER,
Actg. Vol. Lieut., U. S. Navy, Comdg. 2d Div. Potomac Flotilla.

Commander FOXHALL A. PARKER, U. S. Navy,
Commanding Potomac Flotilla.

Additional report of Acting Volunteer Lieutenant Hooker, U. S. Navy, commanding Second Division Potomac Flotilla, regarding proposed cooperation with the Army in a raid upon the enemy.

U. S. S. CURRITUCK,
Off Piney Point, Md., January 5, 1864.

SIR: I have been in communication with General Marston, and find that his plans are not so far matured as I have been led to suppose, and that the movement will not be made before next week. This affords me time for cleaning boilers, which I shall improve.

The plan now proposed is to land a force of cavalry, infantry, and artillery on the Yeocomico [Wicomico?] River and immediately extend a line across to Union wharf, and then, with a cavalry force, sweep over the peninsula, collecting forage, horses, and cattle, and also with a view to capturing two companies of rebel cavalry in that region.

In cooperating I propose to take the *Teaser* and *Yankee* from the upriver stations, and with the *Jacob Bell*, *Cœur de Lion*, and *Teaser* to patrol the Yeocomico [Wicomico?] and Potomac rivers for the purpose of protecting the end of the line resting on the Yeocomico [Wicomico?], and the transports employed in removing the material collected. With the *Currituck*, *Anacostia*, *Tulip*, and *Yankee*, I will patrol the Rappahannock to prevent the escape of fugitives, the crossing of troops from below, to protect the end of the line at Union wharf, and the transports employed in removing the forage, etc., on that river.

If the above plan and my action in connection with it meet your approbation, I shall be pleased to be informed of it.

The general has not yet made the plan known to any of his officers, and awaits the arrival of General Butler before moving. He desires it kept a secret.

Very respectfully, your obedient servant,

EDW. HOOKER,
Actg. Vol. Lieut. U. S. Navy, Comdg. 2d Div. Potomac Flotilla.

Commander F. A. PARKER, U. S. Navy,
Commanding Potomac Flotilla.

Letter from Commander Parker, U. S. Navy, commanding Potomac Flotilla, to Acting Volunteer Lieutenant Hooker, U. S. Navy, commanding Second Division, regarding proposed raid.

U. S. S. COMMODORE READ,
Washington Navy Yard, January 5, 1864.

SIR: I have just written to General Marston, desiring that the raid of which you speak be postponed until I have had an interview with him.

Very respectfully, your obedient servant,

FOXHALL A. PARKER,
Commander, Commanding Potomac Flotilla.

Acting Volunteer Lieutenant EDWARD HOOKER,
Comdg. U. S. S. Currituck and Second Div. Potomac Flotilla.

Instructions of the Secretary of the Navy to Commander Parker, U. S. Navy, commanding Potomac Flotilla, regarding the passing of vessels down the Potomac River.

NAVY DEPARTMENT, *January 7, 1864.*

SIR: The following instructions are issued for your guidance in the matter of passing vessels down the Potomac chartered by, or in the employment of, the Quartermaster's Department of the Army.

1. Those not going outside the capes of the Chesapeake, nor to an open port within, will be passed upon the certificate of General D. H. Rucker, Chief Quartermaster, or Captain E. S. Allen, Assistant Quartermaster at Washington, that they have only Government stores or property on board, without regard to custom-house clearance.

2. Those going to a port outside the capes, not opened by proclamation of the President, will be passed only upon such a certificate as is above indicated and a reglar custom-house clearance.

3. Those going to open ports inside or outside the capes will be passed upon a regular custom-house clearance without such a certificate as is above indicated, but not with [upon] the certificate alone.

Very respectfully, etc.,

GIDEON WELLES,
Secretary of Navy.

Commander FOXHALL A. PARKER,
Commanding Potomac Flotilla, Washington, D. C.

Report of Commander Parker, U. S. Navy, commanding Potomac Flotilla, regarding three ice-bound schooners.

U. S. S. COMMODORE READ,
Alexandria, January 7, 1864.

SIR: I have the honor to inform the Department that this afternoon while endeavoring to go down the Potomac, I observed three schooners fast in the ice abreast of and below Mount Vernon, and as the river is frozen across (so I am informed) to Maryland Point, it is probable that many other vessels are in a similar condition.

As the flotilla can not afford them aid, I would most respectully suggest that the military authorities be apprised of the fact, in order that they may take such measures for their relief and protection against guerrillas as they may deem advisable.

I have the honor to be, your obedient servant,

FOXHALL A. PARKER,
Commander, Commanding Potomac Flotilla.

Hon. GIDEON WELLES,
Secretary of the Navy, Washington, D. C.

Report of Acting Volunteer Lieutenant Hooker, U. S. Navy, commanding Second Division Potomac Flotilla, regarding proposed raid in cooperation with the Army.

U. S. S. CURRITUCK,
Off Point Lookout, Md., January 8, 1864.

SIR: I have the honor to acknowledge receipt of communications—viz, from Commodore Harwood, notifying change of commanders, etc.; from yourself, about letter to General Marston, and transferring me to U. S. S. *Yankee.*

I wrote you on Tuesday more fully about the raid, and trust my letter has come to hand. General Butler was here yesterday, and it was planned to move on Monday next. The snowstorm will probably delay it a little.

General Marston informs me that he has received your letter, which came to hand just as General Butler was leaving. What effect it will have on their movements I can not tell.

Very respectfully, your obedient servant,

EDWARD HOOKER,
Actg. Vol. Lieut., U. S. Navy, Comdg. 2d Div. Potomac Flotilla.

Commander F. A. PARKER, U. S. Navy,
Commanding Potomac Flotilla.

Letter from the Secretary of the Navy to the Secretary of War, regarding maintenance of blockade by the Army in case of the closing of navigation in the Potomac River by ice.

NAVY DEPARTMENT, *January 8, 1864.*

SIR: I have the honor to invite your attention to the accompanying copy of a communication* just received from Commander Foxhall A. Parker, commanding the Potomac Flotilla, in which he states that he yesterday discovered three vessels frozen in by the ice off Mount Vernon; that the flotilla is unable to give them aid, and suggests that the military authorities may be apprised of the fact, so that measures may be taken for their relief and for their protection against guerrillas.

I take this occasion to state that if this cold weather continues much longer it is quite likely the Potomac will be frozen over to a great extent, thus closing navigation and allowing the passage of persons across the river on the ice. In this event the blockade can not be maintained by the flotilla, nor can it prevent communication between the Maryland and Virginia shores, and this duty would devolve upon the Army, as well as of protecting vessels frozen in by the ice.

It seems judicious, therefore, to be prepared for such an emergency.

Very respectfully,

GIDEON WELLES,
Secretary of the Navy.

Hon. E. M. STANTON,
Secretary of War.

Letter from the Secretary of War to the Secretary of the Navy regarding measures of relief for icebound schooners in the Potomac River.

WAR DEPARTMENT,
Washington City, January 9, 1864.

SIR: The Secretary of War instructs me to acknowledge the receipt of your letter of yesterday, enclosing a copy of a communication of the 7th instant, addressed to your department by the commander of the Potomac Flotilla, in which he suggests that the military authorities should be apprised of the fact that three vessels are embedded in the ice off Mount Vernon to which the flotilla is unable to give protection

* See p. 384.

from guerrillas; to which statement you add that in the event of the Potomac being entirely frozen over, it seems judicious to provide for the intervention of the Army to prevent the communication between the Virginia and Maryland shores, which can not be effected by the blockading squadron.

In reply, the Secretary instructs me to advise you that the general in chief has been instructed to take such measures as may be necessary in the premises.

I have the honor to be, your obedient servant,

E. R. S. CANBY,
Brigadier-General, Assistant Adjutant-General.

SECRETARY OF THE NAVY,
Washington, D. C.

Report of Commander Parker, U. S. Navy, commanding Potomac Flotilla, regarding boat expedition to Nomini.

U. S. S. COMMODORE READ,
Off Piney Point, January 9, 1864.

SIR: It having been discovered that the rebels had concealed at Nomini a large lighter and skiff capable of containing eighty men, a force was landed there on the 5th instant from the steamers *Teaser* and *Yankee*, under the command of Acting Ensign Sheridan, which succeeded in destroying the former and capturing the latter.

While they were engaged in this a number of rebel soldiers made their appearance on the Nomini heights, but were quickly dispersed by a well-directed fire from the gunboats.

Very respectfully, your obedient servant,

FOXHALL A. PARKER,
Commander, Commanding Potomac Flotilla.

Hon. GIDEON WELLES,
Secretary of the Navy.

Order of Commander Parker, U. S. Navy, commanding Potomac Flotilla, to Acting Volunteer Lieutenant Hooker, U. S. Navy, commanding Second Division, to cruise near the mouth of Rappahannock River.

U. S. S. COMMODORE READ,
Off Point Lookout, January 11, 1864.

SIR: General Marston having informed me that he designs making a raid on the peninsula between the Potomac and the Rappahannock, during which he may occasionally be on the latter, you are hereby directed to cruise until Thursday evening with the vessels under your command between Union wharf and the mouth of the Rappahannock.

You will use every precaution to guard against surprise, and will not permit an officer or man to land on shore.

I am, respectfully, your obedient servant,

FOXHALL A. PARKER,
Commander, Commanding Potomac Flotilla.

Acting Volunteer Lieutenant EDWARD HOOKER,
Comdg. U. S. S. Yankee and Second Div. Potomac Flotilla.

Order of Commander Parker, U. S. Navy, commanding Potomac Flotilla, to Acting Volunteer Lieutenant Hooker, U. S. Navy, commanding Second Division, regarding seizures of cattle.

U. S. S. COMMODORE READ,
Off Piney Point, January 11, 1864.

SIR: You will forthwith place me in possession of the "reliable information" which led to the seizure of the "beeves and calves" mentioned in the report of Acting Master Nelson Provost, of the U. S. S. *Anacostia*, and also inform me what disposition was made of them. Also, whether any poultry was taken at the same time.

Very respectfully, your obedient servant,

FOXHALL A. PARKER,
Commander, Commanding Potomac Flotilla.

Acting Volunteer Lieutenant EDWARD HOOKER,
Comdg. U. S. S. Yankee and Second Div. Potomac Flotilla.

Report of Acting Volunteer Lieutenant Hooker, U. S. Navy, commanding Second Division Potomac Flotilla, regarding seizures of cattle.

U. S. S. YANKEE,
Rappahannock River, Virginia, January 16, 1864.

SIR: I enclose herewith my report* of the late movement on this river in cooperation with the forces of General Marston.

I also enclose copies of the orders which you directed me to send you. My first letter of instructions I send in full, although but a small part alludes to landing, etc. The order directing me to consult with Lieutenant Commander Magaw was reported to that gentleman, and, owing to the difficulty of communicating with him, I received a verbal sanction to act on my own judgment, except in very important cases.

The information with regard to Lelan was as follows: I had often heard of him as a conscript officer, who, with a party under his command, was very active in looking up deserters, etc. During the latter part of December we visited Windmill Point during the night and took off several men. Information of this was sent to the gunboats in the morning, and Acting Master Provost, senior officer present (I being away coaling), landed a company of men and proceeded to his house, hoping to capture some of the party. While there, he observed a large quantity of hogs, cattle, poultry, etc., and on enquiry was told by negroes that they were going to Richmond. This being reported to me, and subsequently the report confirmed by a white refugee, on January 1, I sent a company to his (Lelan's) place to try and capture him, and also to get some fresh meat. Lelan was not at home, and nearly all the stock had been removed. The meat procured was distributed among the vessels of the Second Division, to be served to the men. A few chickens were brought down, which I am informed were bought from the negroes, and some may have been taken without paying. I think not, however.

---

*See p. 388.

I enclose herewith copies of the private signal and general orders established by me when I first came to the Rappahannock River. I trust they will meet your approbation.

I enclose also several documents from the other vessels.

Very respectfully, your obedient servant,

EDWARD HOOKER,
Actg. Vol. Lieut., U. S. Navy, Comdg. 2d Div. Potomac Flotilla.

Commander FOXHALL A. PARKER, U. S. Navy,
Commanding Potomac Flotilla.

Report of Commander Parker, U. S. Navy, commanding Potomac Flotilla acknowledging Department's instructions.

U. S. S. COMMODORE READ,
Rappahannock River, January 12, 1864.

SIR: I have the honor to acknowledge the receipt of your communication of the 7th instant, containing instructions for passing vessels down the Potomac, a copy of which I transmitted to the commanding officer of the guard ship off Alexandria for his guidance.

Very respectfully, your obedient servant,

FOXHALL A. PARKER,
Commander, Commanding Potomac Flotilla.

Hon. GIDEON WELLES,
Secretary of the Navy.

Cooperation of the Navy with the army expedition to the Northern Neck, January 12, 1864.

Report of Commander Parker, U. S. Navy, commanding Potomac Flotilla.

U. S. S. COMMODORE READ,
Off Piney Point, January 19, 1864.

SIR: I have the honor to inform the Department that on the 12th instant, under cover of the gunboats *Yankee*, *Currituck*, *Anacostia*, *Tulip*, and *Jacob Bell*, which I had assigned to this duty, General Marston landed a force of cavalry and infantry on the peninsula between the Potomac and Rappahannock rivers, and succeeded in capturing a small body of the enemy and a large number of cavalry horses.

Very respectfully, your obedient servant,

FOXHALL A. PARKER,
Commander, Commanding Potomac Flotilla.

Hon. GIDEON WELLES,
Secretary of the Navy.

Report of Acting Volunteer Lieutenant Hooker, U. S. Navy, commanding Second Division Potomac Flotilla.

U. S. S. YANKEE,
Rappahannock River, Virginia, January 16, 1864.

SIR: I have the honor to report that in accordance with your orders I moved up the Rappahannock River with the vessels under my command at 10 o'clock a. m. Tuesday, the 12th instant, assigning to the

vessels their different stations as I passed up. At 5 o'clock p. m. I arrived at Union wharf with the *Currituck* in company, and finding all quiet returned the *Currituck* to her station, while I remained at Union wharf ferry. At about midnight the signal agreed upon announced the arrival of the cavalry. At 4 o'clock a. m. rocket signals were discovered from the enemy.

The morning of Wednesday, the 13th, broke hazy and cloudy, and soon after we descried a large number of persons on the south bank of the river some distance above my anchorage. I got underway and proceeded up as far as Totouskey Creek, nearly opposite to which were a number of men, several on horseback, having with them five large boats, three of which were on wheels with long teams of horses and cattle attached. Owing to the shallow water, I was unable to bring the ship near them, and my rifle was the only gun which would reach them. Three shots from that dispersed them, but I did not deem it prudent to send my boats to destroy the boats which they left behind, and passed on down the river. At about noon a white flag was shown on the beach, and a boat sent to it returned with the information that the cavalry were 2 or 3 miles inland and advancing toward the head of Corrotoman Bay [River]. Having communicated with all the vessels, I again proceeded up the river. During the night, the weather becoming thick, I found the *Currituck*, and anchoring that ship made the *Yankee* fast to her stern, and so remained until the fog lifted (about noon of Thursday), when I got underway and proceeded down the river, collecting the vessels as I advanced. At 7 o'clock p. m. I reached the mouth of the river, having had no direct communication with the land forces and no intimation of their position after the communication with the flag on shore.

Having assigned night stations to the vessels, I proceeded with the *Yankee* to cruise in Fleets Bay, and at noon on Friday entered the Great Wicomico River, and there found the troops just embarking, part of the vessels aground, and a lack of system in the movements. I am happy to say that within an hour after my arrival everything was afloat and the troops embarked, and at 2 o'clock p. m., having led the line out of the river, I bade farewell to the expedition and proceeded to the Rappahannock.

Very respectfully, your obedient servant,

EDWARD HOOKER,
Actg. Vol. Lieut., U. S. Navy, Comdg. 2d Div. Potomac Flotilla.

Commander FOXHALL A. PARKER, U. S. Navy,
Commanding Potomac Flotilla.

Order of Commander Parker, U. S. Navy, commanding Potomac Flotilla, to Acting Volunteer Lieutenant Hooker, U. S. Navy, commanding Second Division, regarding disposition of vessels.

U. S. S. COMMODORE READ,
Off Piney Point, January 14, 1864.

SIR: Immediately after the return of General Marston with his command to Point Lookout you will send the *Anacostia* there and the *Jacob Bell* to Blakistone Island, Station F.

Feeling some apprehension for the safety of the large fleet of merchantmen now at this anchorage, I have directed the *Wyandank* to remain here, and have given Acting Master Taylor, of the *Sophronia*, specific instructions in regard to her.

Hereafter an abstract from the log of each vessel, showing her position at the end of each watch, must accompany the "weekly report of location."

I am, respectfully, yours,

FOXHALL A. PARKER,
Commander, Commanding Potomac Flotilla.

Acting Volunteer Lieutenant EDWARD HOOKER,
Commanding Second Division Potomac Flotilla.

Order of Commander Parker, U. S. Navy, commanding Potomac Flotilla, to Acting Master Schulze, U. S. Navy, commanding U. S. S. Jacob Bell, to proceed to Point Lookout, Md.

U. S. S. COMMODORE READ,
Off Piney Point, January 19, 1864.

SIR: You will proceed to Point Lookout and remain there for the protection of that place.

Send a copy of this order to Acting Volunteer Lieutenant Edward Hooker, commanding First [Second] Division Potomac Flotilla.

I am, respectfully, yours,

FOXHALL A. PARKER,
Commander, Commanding Potomac Flotilla.

Acting Master SCHULZE,
Commanding U. S. S. Jacob Bell.

Order of Commander Parker, U. S. Navy, commanding Potomac Flotilla, to Acting Volunteer Lieutenant Hooker, U. S. Navy, commanding Second Division, regarding operations in the Rappahannock River.

U. S. S. COMMODORE READ,
Off Piney Point, January 20, 1864.

SIR: I have received your very satisfactory report of the operations on the Rappahannock River from the 12th to the 15th instant.

For particular reasons I deem it best that you should not cruise for some little time to come higher up the Rappanannock than you have been in the habit of going.

The men on the eastern shore I do not desire to ship for the flotilla. I hope, however, to fill all deficiencies in a week or two by draft from the North.

I fully approve of your regulations, etc., for the vessels of your division. The *Teaser* having been detailed for special service, I have been compelled to order the *Anacostia* here, and have therefore directed the *Jacob Bell* to remain at Point Lookout.

I am, respectfully, yours,

FOXHALL A. PARKER,
Commander, Commanding Potomac Flotilla.

Acting Volunteer Lieutenant EDWARD HOOKER,
Commanding Second Division Potomac Flotilla.

Order of Commander Parker, U. S. Navy, commanding Potomac Flotilla, to Acting Volunteer Lieutenant Hooker, U. S. Navy, commanding Second Division, regarding distribution of the vessels of his command in cooperation with General Marston.

U. S. S. ELLA,
Potomac Flotilla, February 2, 1864.

SIR: The vessels of your division will consist of the *Yankee*, *Currituck*, *Freeborn*, *Western World*, *Anacostia*, *Tulip*, and *William Bacon*. You will, after consultation with General Marston, select such an anchorage for the *Bacon* off Point Lookout as will, in your judgment, best enable her to protect that point from attack from without or revolt from within.

The *Anacostia* is to cruise from dusk to daylight of each night between Piney Point and Point Lookout, coming to anchor during the day near the guard ship at the former place. The other vessels of your command you will dispose of as your judgment may dictate for the prevention of blockade running between Point Lookout and the Piankatank, being careful to keep them always underway at night, except in thick and heavy weather, and to use every precaution to guard against surprise both by day and by night.

Very respectfully, your obedient servant,

FOXHALL A. PARKER,
Commander, Commanding Potomac Flotilla.

Acting Volunteer Lieutenant EDWARD HOOKER, U. S. Navy,
Commanding Second Division Potomac Flotilla.

Report of Commander Parker, U. S. Navy, commanding Potomac Flotilla, transmitting letter from provost-marshal-general of Maryland regarding schooner Ann Hamilton.

U. S. S. ELLA,
Potomac Flotilla, February 9, 1864.

SIR: I have the honor to enclose herewith a copy of letter received from the provost-marshal-general for the State of Maryland.

I am, sir, very respectfully, your obedient servant,

FOXHALL A. PARKER,
Commander, Commanding Potomac Flotilla.

Hon. GIDEON WELLES,
Secretary of the Navy.

[Enclosure.]

BALTIMORE, *February 5, 1864.*

SIR: Yours about steamer *Cooper's Point* received this morning, for which please receive my thanks.

I would be glad to enter into any arrangement to send you information that would reach you punctually.

Since the writing of your letter some changes in regard to trade in the northern neck of Virginia have taken place, which I think equivalent to raising the blockade. General Butler has given permission to parties in Baltimore to trade on the Wicomico River, and I understand that arrangements have been made for a gunboat to be placed in the Great Wicomico River, in Northumberland County, the officers of which are to superintend the disposition made of the goods, etc.

The schooner *Ann Hamilton* left this city last Sunday, with a cargo consisting of groceries, dry goods, boots, shoes, hats, stationery, and notions, as per bill on record in the custom-house, to about the amount in value of $8,000. Samuel G. Miles, a well-known secesh merchant of this city, is the agent for the owners to attend to the sales, etc. These parties, I have no doubt, intend bringing out tobacco, which is known to be in large quantity in that section of country, having been sent over from Richmond to be forwarded by the first opportunity to Baltimore, as tobacco is not the product of that section of country. I am of the opinion that it would be a good prize if taken, as it is the opinion of many here that the Treasury Department permit only covers the product of the section of country open upon military recommendation.

I will keep you informed as best I can of all vessels leaving here for the Potomac.

Very respectfully,

J. L. McPHAIL,
Provost-Marshal-General for Maryland.

Commander FOXHALL A. PARKER,
Commanding Potomac Flotilla.

Report of Commander Parker, U. S. Navy, commanding Potomac Flotilla, regarding seizure of schooner Ann Hamilton.

U. S. S. ELLA,
Off Point Lookout, Md., February 12, 1864.

SIR: I have the honor to inform the Department that this morning on my arrival here I found the schooner *Ann Hamilton* (referred to in the letter of the provost-marshal-general of Maryland, a copy of which I forwarded to the Department on the 9th instant), in possession of the revenue steamer *Hercules*, Captain Baker, she having been seized by this vessel at Point Lookout in sight of the U. S. schooner *William Bacon* on the 4th day of February, 1864.

Captain Baker informed me that he had communicated with the collector of Baltimore, who had directed him to detain the *Hamilton* until the Treasury Department could be heard from, but as I could only regard this as a joint seizure on the part of the *Hercules* and *Bacon*, I thought it my duty to take the matter into my own hands. Upon investigation I found that the schooner was bound from Baltimore to the Great Wicomico, having a pass to enter that river from Major-General Butler and the Assistant Secretary of the Treasury, and would have therefore released her and directed her return to Baltimore, knowing the region about the Great Wicomico to be at this very time in possession of the enemy's cavalry, had I not found she had on board 50 sacks of salt, 4 boxes concentrated lye, and $15,299.50 in Southern money not entered on her manifest, which made me regard her as a lawful prize to the *Hercules* and *Bacon*, the commanding officer of which latter vessel I directed to put a prize crew on board of her, agreeably to the last clause of General Orders, No. 26, and send her to the district court at Washington for adjudication. Trusting that my course in this matter will meet with the approbation of the Department,

I am, very respectfully, your obedient servant,

FOXHALL A. PARKER,
Commander, Commanding Potomac Flotilla.

Hon. GIDEON WELLES,
Secretary of the Navy.

Order of Commander Parker, U. S. Navy, commanding Potomac Flotilla, to Acting Volunteer Lieutenant Hooker, U. S. Navy, assigned to command the First Division.

U. S. S. ELLA,
Potomac Flotilla, February 9, 1864.

SIR: You are hereby appointed to the command of the First Division of the Potomac Flotilla, extending from the Piankatank River to Blakistone Island, and comprising the following vessels, viz: *Yankee, Currituck, Freeborn, Tulip, Anacostia, Jacob Bell, Western World, William Bacon*, and *Matthew Vassar*.

You will be held responsible for the discipline and training of the officers and crews of the vessels of your division, and will visit those outside of Point Lookout frequently, and those inside of it whenever you go to Piney Point to coal.

Very respectfully, your obedient servant,

FOXHALL A. PARKER,
Commander, Commanding Potomac Flotilla.

Acting Volunteer Lieutenant EDWARD HOOKER, U. S. Navy,
Commanding First Division Potomac Flotilla.

Order of Commander Parker, U. S. Navy, commanding Potomac Flotilla, to Acting Volunteer Lieutenant Hooker, U. S. Navy, commanding First Division, transmitting general orders for his command.

U. S. S. ELLA,
Potomac Flotilla, February 9, 1864.

SIR: Enclosed you will find General Orders, Nos. 5 and 6, a copy of which you will furnish to all commanders of vessels in your division.

Respectfully, yours,

FOXHALL A. PARKER,
Commander, Commanding Potomac Flotilla.

Acting Volunteer Lieutenant EDWARD HOOKER,
Commanding First Division Potomac Flotilla.

[Enclosures.]

GENERAL ORDERS, No. 5.

U. S. S. ELLA,
February 9, 1864.

Precautions against surprise.

Commanding officers will be on their guard against surprise by the enemy at all times, but especially at night.

The great guns, howitzers, and small arms will be kept loaded, the boarding nettings securely set up, one watch on deck with arms in their hands, and on dark or misty nights the lookouts will be doubled.

Vessels are to be underway at night, except in thick or heavy weather.

When at anchor a slip rope will be placed on the cable and a man kept by it.

The sound of the rattle, or the ringing of the ship's bell, or both, will be the signal to the man at the slip rope to slip, the engineer in the fireroom to "go ahead fast," and the officers and crew to repair to quarters.

No vessel is to anchor in the same place two nights consecutively, nor to come to anchor before night.

At night bells are not to be struck, nor whistles blown (except when necessary to avoid collision or for the purpose of signaling), nor other noise made which will indicate a vessel's position, nor are lights to be shown while running, or when at anchor, except as signals in cases of emergency.

This order does not apply to the guard boats, nor to vessels at the coal depots.

FOXHALL A. PARKER,
Commander, Commanding Potomac Flotilla.

GENERAL ORDERS, No. 6.

U. S. S. ELLA,
February 10, 1864.

Hereafter all vessels of this flotilla passing the guard vessel off Alexandria will make their numbers, and when going in or out of the harbor of, or passing Piney Point, will not only make their numbers, when within the proper distance, but will afterwards pass within hail of, and communicate with, the guard vessel.

FOXHALL A. PARKER,
Commander, Commanding Potomac Flotilla.

Report of Commander Parker, U. S. Navy, commanding Potomac Flotilla, of the shooting of blockade runner John Stewart.

U. S. S. ELLA,
Potomac Flotilla, February 10, 1864.

SIR: I have to report that on the night of the 6th instant a man named John Stewart was shot by Captain Nickerson, of the guard vessel *Adolph Hugel*, off Alexandria.

Stewart in a small boat attempted to pass the guard vessel, and although repeatedly hailed would not reply, whereupon Captain Nickerson fired at him, agreeably to my instructions, shooting him through the body. Stewart was given up to the provost-marshal at Alexandria and by him sent to the hospital, where he lies in a critical condition. The boat sank alongside the *Hugel*, and 10 gallons of whisky which were taken from it were thrown overboard by my order.

I have the honor to be, very respectfully, your obedient servant,

FOXHALL A. PARKER,
Commander, Commanding Potomac Flotilla.

Hon. GIDEON WELLES,
Secretary of the Navy.

Report of Commander Parker, U. S. Navy, commanding Potomac Flotilla, transmitting information received from refugee regarding shells manufactured in Richmond.

U. S. S. ELLA,
Potomac Flotilla, February 11, 1864.

SIR: I have the honor to enclose a copy of a letter received from Acting Master Schulze. The refugees of whom he speaks have been delivered over to the provost-marshal at Point Lookout, Md.

I am, sir, very respectfully, your obedient servant,

FOXHALL A. PARKER,
Commander, Commanding Potomac Flotilla.

Hon. GIDEON WELLES,
Secretary of the Navy.

[Enclosure.]

U. S. S. JACOB BELL,
Off Blakistone Island, February 9, 1864.

SIR: I have to report that I received six refugees on board this morning, coming direct from Richmond, Va. One of them, Joseph Leuty, made the following statement, which I thought important enough to bring to your notice. He says:

I am an Englishman by birth, a molder by trade; have lived in the South for the last four years; for the last eight months I have been working in the artillery shop on Seventh street, Richmond, where they are now making a shell which looks exactly like a piece of coal, pieces of which were taken from a coal pile as patterns to imitate. I have made these shells myself. I believe these shells have power enough to burst any boiler. After they were thrown in a coal pile I could not tell the difference between them and coal myself.

They are intended to be thrown among the coal in Northern depots by bogus refugees, spies, etc. Every blockade runner is to be provided with them, and in case of being captured are to be thrown among the coal. They commenced making these shells two weeks ago.

Hoping that this information may reach you in season to prevent any accident to our forces, I remain, very respectfully, your obedient servant,

G. C. SCHULZE,
Acting Master, Commanding.

Commander FOXHALL A. PARKER, U. S. Navy,
Commanding Potomac Flotilla.

Report of Acting Volunteer Lieutenant Hooker, U. S. Navy, commanding First Division Potomac Flotilla, regarding rumored encampment of the enemy near the head of Urbana Creek.

U. S. S. YANKEE,
Rappahannock River, Virginia, February 18, 1864.

SIR: I have information from a source which I deem trustworthy that a body of the enemy are encamped near the head of Urbana Creek, with boats to attack the blockading vessels with. They are about 12 or 15 miles above the reach of the gunboats. My informant had not seen them, but had collected his information by various reports, all of which coincided so nearly as to be considered correct. The number of boats he had not learned. The boats of the *Satellite* and *Reliance* are there. The number of men had been variously estimated from 800 to 1,000. He had not learned whether they had artillery. I hope to receive more information soon.

So large a number of men would seem to indicate something else than an attack upon the gunboats. I have therefore informed General Marston of their presence.

When last at Point Lookout there seemed to be a strong probability of disturbance there, and this may be something tending that way.

Very respectfully, your obedient servant,

EDWARD HOOKER,
Actg. Vol. Lieut., U. S. Navy, Comdg. First Div. Potomac Flotilla.

Commander F. A. PARKER, U. S. Navy,
Commanding Potomac Flotilla.

Report of Commander Parker, U. S. Navy, commanding Potomac Flotilla, regarding detention from ice in the river.

U. S. S. ELLA,
Potomac Flotilla, February 18, 1864.

SIR: Owing to my being detained here by a leak in the boiler, I have been frozen in. I have detailed the *Teaser* to accompany the army ice-boat, should the river become frozen below Hallowing Point.

I have the honor to be, very respectfully, your obedient servant,

FOXHALL A. PARKER,
Commander, Commanding Potomac Flotilla.

Hon. GIDEON WELLES,
Secretary of the Navy.

Order of Commander Parker, U. S. Navy, commanding Potomac Flotilla, to Acting Volunteer Lieutenant Hooker, U. S. Navy, commanding First Division, to proceed to St. Mary's River, Maryland.

U. S. S. ELLA,
Potomac Flotilla, February 23, 1864.

SIR: Upon the receipt of this order you will take passage in the *Fuchsia* and report to me at St. Mary's River, Maryland.

Before leaving enjoin upon the commanding officers of your division the necessity of keeping underway at night; also bring me the latest information relative to the boats and cavalry you spoke of in your letter to me.

Respectfully, yours,

FOXHALL A. PARKER,
Commander, Commanding Potomac Flotilla.

Acting Volunteer Lieutenant EDWARD HOOKER, U. S. Navy,
Commanding First Division Potomac Flotilla.

Order of Commander Parker, U. S. Navy, commanding Potomac Flotilla, to Acting Master Street, U. S. Navy, commanding U. S. S. Fuchsia, to proceed to St. Mary's River, Maryland.

U. S. S. ELLA,
Potomac Flotilla, February 23, 1864.

SIR: You will, with the vessel under your command, proceed without delay to the Rappahannock and take on board Lieutenant Hooker, and report to me at St. Mary's River [Maryland].

Respectfully, yours,

FOXHALL A. PARKER,
Commander, Commanding Potomac Flotilla.

Acting Master WM. T. STREET, U. S. Navy,
Commanding U. S. S. Fuchsia.

Report of Commander Parker, U. S. Navy, commanding Potomac Flotilla, of the capture of blockade runners by U. S. steamers Dragon and Jacob Bell.

U. S. S. ELLA,
Potomac Flotilla, February 24, 1864.

SIR: I have the honor to report that on the night of the 23d instant the *Dragon* captured two canoes, with twenty-nine men, women, and

children, in the act of running the blockade from Virginia to Maryland; also on the night of the 21st instant the *Jacob Bell* captured a notorious blockade runner, named George W. Garnett, attempting to cross from Maryland to Virginia, all of whom I have turned over to the provost-marshal at Point Lookout, Md.

I am, sir, very respectfully, your obedient servant,

FOXHALL A. PARKER,
Commander, Commanding Potomac Flotilla.

Hon. GIDEON WELLES,
Secretary of the Navy.

Letter from Commander Parker, U. S. Navy, commanding Potomac Flotilla, to Acting Volunteer Lieutenant Hooker, U. S. Navy, commanding First Division, regarding proposed expedition to the Rappahannock.

Private and confidential.] U. S. S. ELLA, *February 27, 1864.*

MY DEAR SIR: The bad weather and a severe attack of sickness prevented me from leaving for the Rappahannock last night, and to-night I find that the expedition is no longer a secret. This, with the failure of an officer to carry out my orders, has decided me to abandon my design for the present. You will soon hear from me. I send the *Freeborn* to report to you. Dispose of your force as you think prudent, and do not go above Carter's Creek. Communicate with me often.

Yours, truly,

FOXHALL A. PARKER.

Acting Volunteer Lieutenant HOOKER,
Commanding First Division Potomac Flotilla.

Report of Commander Parker, U. S. Navy, commanding Potomac Flotilla, of the arrival of Union officers escaped from Libby Prison.

U. S. S. ELLA,
Off Navy Yard, Washington, February 29, 1864.

SIR: I have the honor to inform the Department that I arrived here to-day, with Colonel A. D. Streight, Fifty-first Indiana Volunteers, Major B. B. McDonald, One hundred and first Ohio Volunteers, Captain W. W. Scearce, Fifty-first Indiana Volunteers, and First Lieutenant John Sterling, Thirtieth Indiana Volunteers, who made their escape from Libby Prison, Richmond, on the 9th instant, and reached Blakistone Island, Potomac River (where I found them), yesterday.

I am, very respectfully, your obedient servant,

FOXHALL A. PARKER,
Commander, Commanding Potomac Flotilla.

Hon. GIDEON WELLES,
Secretary of the Navy, Washington, D. C.

Report of Acting Volunteer Lieutenant Hooker, U. S. Navy, commanding First Division Potomac Flotilla, giving information regarding movements of Confederate forces.

U. S. S. YANKEE,
Rappahannock River, Virginia, February 29, 1864.

SIR: The *Freeborn* arrived last night, and brought me intelligence of the postponement of the proposed expedition. On this station at least,

not an officer except the commanding officers had any knowledge of the intended movement.

I have some news of importance. There are 600 cavalry at Heathsville, on the Coan River. The forces near Urbana have been reenforced by John Taylor Wood, who is in command, and his party from New Berne, a portion of them, have moved down from Urbana to Sturgeon Creek.

There is also a report that the Ninth Virginia Cavalry are at Union wharf and a large force on the opposite side of the river.

The *Crusader* also brings me information of 600 cavalry at New Point, below here.

I can but feel that so large a force means something more than an attack on the gunboats, although that is no doubt a part of the programme.

I shall use my utmost endeavors to guard against their success.

Very respectfully, your obedient servant,

EDWARD HOOKER,
Actg. Vol. Lieut., U. S. Navy, Comdg. First Div. Potomac Flotilla.

Commander F. A. PARKER, U. S. Navy,
Commanding Potomac Flotilla.

Capture of the tug Titan by a party of Confederates.

Report of Acting Volunteer Lieutenant Hooker, U. S. Navy, commanding First Division Potomac Flotilla, regarding chase of suspicious steamer.

U. S. S. YANKEE,
Rappahannock River, Virginia, March 5, 1864.

SIR: This p. m., the weather being hazy, a steamer was seen near the mouth of the Piankatank River.

I at once dispatched the *Tulip* in chase and subsequently the *Currituck*.

The *Tulip* returned, and reports that the steamer was a lead-colored tugboat, without a flag, and steaming up the river fast. She (the *Tulip*) would have got within range, but her pilot did not know the way. On this report I dispatched the *Freeborn* with orders to the *Currituck*. The *Freeborn* has just returned (7 o'clock p. m.), and reports that the *Currituck* had been 8 miles up the river without finding anything.

I shall take all the vessels into the mouth of the river to-night and go up at daylight to-morrow.

I dispatch this per *Tulip* to intercept the Fortress Monroe boat, as I think Wood has got some tugboat.

In great haste, your obedient servant,

E. HOOKER,
Acting Volunteer Lieutenant, etc.

Commander F. A. PARKER, U. S. Navy,
Commanding Potomac Flotilla.

P. S.—I communicate all the facts which I know. I deem them strongly suspicious.

E. H.

NOTE.—The steamer proved to be the *Titan*, captured by Wood, at 4 o'clock a. m. Not having pilots I could not reach her. At 4 o'clock p. m., Sunday, the commodore arrived and sent back to St. George's

Island for pilots; they arrived at 2:30 a. m. Monday, at daylight, the expedition moved up the river and at noon the *Titan* was destroyed, together with a number of large boats prepared for a raid.

E. H.

[Telegram.]

EASTVILLE, MD. [VA.], *March 5, 1864.*

(Forwarded from War Department March 5, 1864, to Commander F. A. Parker.)

Our office at Cherrystone was attacked this morning about 4 a. m. by about forty or fifty men. Dunn, the operator, escaped after throwing his instruments into the bay, but was again captured and paroled. He was fired at several times but not hit. They killed his horse and all the horses there, burned the guardhouse and a lot of commissary stores, seized the dispatch boat and said they were going after the cable boat and take her. They got no Government messages, they having been burned after having been sent. Dunn, at Eastville, thinks they did not disturb the cable at Cherrystone. Dunn says if he can get sufficient protection, will go to work again. There should be a large guard at Cherrystone. I think this raid was prompted and made by the information being published in the papers that the cable was good and the boats running. The boat which was captured is the *Titan;* she has no cannon but plenty of rifles. The men said they would try and capture the boat at work on the cable.

M. C. B. BUELL,
Manager.

Major ECKERT.

[Telegram.]

WAR DEPARTMENT, *March 5, 1864.*

SIR: It was the *Titan* which was captured this a. m., and the *McClellan* which was at work on the cable. Telegram just sent over to Commander Parker reads "*Titan* which is laying the cable." I changed it, making it read, "*McClellan* which is laying the cable," etc.

Very truly,

THOS. T. ECKERT,
Major, etc.

Captain FOX.

[Telegram.]

NAVY DEPARTMENT, *March 5, 1864.*

The *Titan*, which is engaged in laying the cable, and which the raiders will endeavor to capture, is armed with a 24-pounder. Take two or three of your best vessels in the river and spread out in the bay after them.

GIDEON WELLES,
Secretary of the Navy.

Commander F. A. PARKER,
Commanding Potomac Flotilla, Navy Yard, Washington, D. C.

Let the commanding officer of the *Baltimore* take this dispatch down to Commander Parker.

[Telegram.]

NAVY DEPARTMENT, *March 5, 1864.*

Send a steamer at once to Cherrystone and endeavor to capture these raiders.

GIDEON WELLES,
Secretary of the Navy.

Commander F. A. PARKER,
Commanding Potomac Flotilla, Navy Yard, Washington, D. C.

Order of Commander Parker, U. S. Navy, commanding Potomac Flotilla, to Acting Master Smith, U. S. Navy, commanding U. S. S. Commodore Read, to cruise in search of captured tug Titan.

U. S. S. ELLA,
Potomac Flotilla, March 5, 1864.

SIR: You are hereby directed with the vessel under your command and the *Fuchsia*, commanded by Acting Master Street, to proceed at once to Cherrystone Inlet, eastern shore of Maryland [Virginia], where you will leave the *Fuchsia* and proceed to cruise in search of the tug *Titan*, mentioned in the copy of a dispatch which I enclose.

On your way to Cherrystone you will stop at the Rappahannock and give to the senior officer there the information contained in the dispatch, cautioning him from me to be vigilant and guard against surprise.

This information you will also communicate to any of Admiral Lee's vessels which you may happen to fall in with.

Should you not be able to obtain any definite information of the *Titan* by Monday morning, or should you by that time have obtained information that she has succeeded in getting up any of the rivers of the enemy so that you can not follow her, you will return to your station and report to me in St. Mary's River.

Respectfully, yours,

FOXHALL A. PARKER,
Commander, Commanding Potomac Flotilla.

Acting Master WM. H. SMITH,
Commanding Commodore Read.

P. S.—Should you not find me in St. Mary's River, you will at once proceed to Washington navy yard.

Inform the guard vessels off Point Lookout of the taking of the *Titan*, and direct the senior officer there to inform General Marston of the fact.

FOXHALL A. PARKER.

Order of Commander Parker, U. S. Navy, commanding Potomac Flotilla, to Acting Volunteer Lieutenant Hooker, U. S. Navy, commanding First Division, to search in Chesapeake Bay for tug Titan.

U. S. S. ELLA,
Potomac Flotilla, March 6, 1864.

SIR: Immediately upon the receipt of this order you will detach one of your best vessels to cruise in the bay for the tug *Titan* (without cannon) and the steamer *McClellan* (armed with a 25-pounder), which have been captured by the rebels.

You will direct the commanding officer engaged on this duty to use the utmost vigilance, to cruise in all parts of the bay, and overhaul everything he falls in with.

You will so distribute the other vessels of your command as to prevent the rebel vessels from getting into the Piankatank or Rappahannock, or any of the many creeks between the latter river and Smith's Point.

Respectfully, yours,

FOXHALL A. PARKER,
Commander, Commanding Potomac Flotilla.

Acting Volunteer Lieutenant E. HOOKER, or
SENIOR OFFICER PRESENT,
Off Rappahannock.

Report of Commander Parker, U. S. Navy, commanding Potomac Flotilla, of Disposition of vessels searching for tug Titan.

U. S. S. ELLA,
Off Piney Point, Md., March 6, 1864—8 a. m.

SIR: I have the honor to inform the Department that I have a steamer by this time at Cherrystone; have detailed two steamers to cruise in Chesapeake Bay; have a tug and two heavily armed schooners at Point Lookout; a tug and a schooner at this place, and the rest of my vessels (with the exception of two small tugs left at Nanjemoy for the protection of that anchorage) distributed between the Piankatank River and Smith's Point, Va., so as to prevent the rebel vessels from making a harbor in Virginia. Shall remain myself between Point Lookout and Piney Point, where I will be in communication with all the vessels of the flotilla, and I will act as circumstances may require.

I am, sir, very respectfully, your obedient servant,

FOXHALL A. PARKER,
Commander, Commanding Potomac Flotilla.

Hon. GIDEON WELLES,
Secretary of the Navy.

[Telegram.]

FORT MONROE, VA., *March 6, 1864.*
(Received at Washington 3:50 p. m., March 7, 1864.)

General Meigs arrived here to-night. The raid on Cherrystone and the capture of the *Titan* seems to have no object except that of theft. The *Titan* has been chased into the Piankatank River, where she is watched by four navy gunboats.

BENJ. F. BUTLER,
Major-General, Commanding.

Hon. EDWIN M. STANTON,
Secretary of War.

Report of Commander Parker, U. S. Navy, commanding Potomac Flotilla, regarding expedition into Piankatank River and destruction of tug Titan.

U. S. S. ELLA,
Potomac Flotilla, March 7, 1864—10 p. m.

SIR: Having been informed yesterday, at 11 a. m., by Acting Volunteer Lieutenant Hooker, senior officer off the Rappahannock, that in a dense haze the tug *Titan* had succeeded in getting into the Piankatank after having been chased by the U. S. S. *Tulip*, I proceeded at once to the mouth of this river, where I arrived a little before sunset. This

morning, at daylight, leaving the *Yankee*, *Tulip*, and *Teaser* to guard the Rappahannock, I ascended the Piankatank with the *Commodore Read*, *Jacob Bell*, *Fuchsia*, *Freeborn*, and *Currituck* to Freeport, the head of navigation, where I found the *Titan* burned to the water's edge, the rebels having set fire to her at an early hour this morning. After shelling the adjacent woods, I sent in a number of armed boats under Acting Ensign Nelson, who completed the work of destruction by breaking the boiler, etc., of the *Titan*. A metallic life boat belonging to her was brought off, and is now on board the *Commodore Read*.

I was much gratified with the energy displayed by all the commanding officers of the flotilla, and by the admirable manner in which the vessels I took with me up the Piankatank were handled in that narrow and intricate river.

I have the honor to be, very respectfully, your obedient servant,

FOXHALL A. PARKER,
Commander, Commanding Potomac Flotilla.

Hon. GIDEON WELLES,
Secretary of the Navy.

Report of Acting Volunteer Lieutenant Hooker, U. S. Navy, commanding First Division Potomac Flotilla, regarding proposed reconnoissance in the Rappahannock River.

U. S. S. YANKEE,
Rappahannock River, Virginia, March 8, 1864.

SIR: The thick weather of to-day prevents me making the reconnoissance you wished. I will make it to-morrow.

The same cause has delayed the *Fuchsia*, although she has accomplished her errand and returned (p. m.).

Captain Street reports that they met the enemy's cavalry, but by showing a bold front kept them from attacking.

As Captain Street is the only man here acquainted with persons living on the banks of the Rappanannock above here, I shall take the responsibility of detaining him until to-morrow, so as to have his aid on the reconnoissance.

The commanding officer of the *Tulip* wishes me to apply for one of the pilots which you had yesterday for his vessel. His present pilot knows but very little about the river.

Acting Master Schulze stated that Fleet Engineer Reilly was making some repairs on his boiler, which were not completed when he left for the Piankatank. I have therefore sent him back to complete them. When he comes down, he can bring the pilots for the *Freeborn* and *Tulip*.

I think I shall have no trouble about taking out all the coals from the schooner, and if her papers are sent me by the *Bell* I can dispatch her with less demurrage than if I send her back to Piney Point.

On the return of the *Bell*, I will, if nothing new presents itself, make the trip to the eastern shore, which was proposed some time ago, unless you think it best not to go.

About one-half the articles on my January requisitions, and all those on the February ones, have not been received.

I enclose station report and weekly abstract of log.

I will write again after making the reconnoissance.

Very respectfully, your obedient servant,

E. HOOKER,
Actg. Vol. Lieut., U. S. Navy, Comdg. 1st Div. Potomac Flotilla.

Commander F. A. PARKER, U. S. Navy,
Commanding Potomac Flotilla.

Order of Commander Parker, U. S. Navy, commanding Potomac Flotilla, to Acting Volunteer Lieutenant Hooker, U. S. Navy, commanding First Division, for investigation regarding detention of steamer Express.

U. S. S. ELLA,
Potomac Flotilla, March 9, 1864.

MY DEAR SIR: The commander requests me to say to you that you will go to Piney Point the first opportunity for the purpose of holding the investigations relating to the detention of the steamer *Express* and the discrepancy in the coal account of Acting Master Taylor. You will find Acting Ensign Merrill (one of the board) at that place, as well as Acting Master Street, who cruises between Point Lookout and Piney Point.

He also desires you to instruct the senior officer left on the station to keep a strict lookout for the Piankatank, Rappahannock, and Wicomico rivers, and impress upon him the necessity to guard against surprise.

We go to Washington to-day.

Very truly, yours, EDMUND A. RODERICK,
Secretary to Flotilla.

Lieutenant HOOKER.

Report of Acting Volunteer Lieutenant Hooker, U. S. Navy, commanding First Division Potomac Flotilla, regarding attempted capture of Major Lawson, C. S. Army.

U. S. S. YANKEE,
Rappahannock River, Virginia, March 9, 1864.

SIR: I last night received such information as induced me to attempt the capture of Major Lawson, C. S. Army, reported to have arrived home. For this purpose, having left the *Freeborn* to take care of the coal schooner, I rendezvoused the other vessels at Carter's Creek at 11 o'clock p. m. and sent a party of thirty men under Acting Master Street up the creek to his place. The intention was to seize a negro for a guide, but in this Captain S[treet] did not succeed, and on approaching the house the alarm was given by a negro sentry and also by dogs evidently trained for the purpose, and before the house could be surrounded the major escaped.

Acting Master Street searched everything, but could not find him. He, however, did find some bacon prepared to send to Richmond. This he brought off, and I have divided it among the vessels. The quantity is hardly enough to serve as a ration. I have, however, directed that an account be kept of it to render to you should you require it.

I send you three hams, which I think you will find nice.

Very respectfully, your obedient servant,

EDWARD HOOKER,
Actg. Vol. Lieut., U. S. Navy, Comdg. First Div. Potomac Flotilla.

Commander F. A. PARKER, U. S. Navy,
Commanding Potomac Flotilla.

Report of Acting Volunteer Lieutenant Hooker, U. S. Navy, commanding First Division Potomac Flotilla, of reconnoissance near Urbana, Va.

U. S. S. YANKEE,
Rappahannock River, Virginia, March 9, 1864.

SIR: I have made the reconnoissance you wished, and communicated with the shore about a mile below Urbana and in sight of the enemy's pickets.

We learned that there is now no force of any importance at or near Urbana, although the presence of troops a short time ago was confirmed.

Of troops above Urbana I could learn nothing. At Saluda, 2 miles back from where our landing was made, were some thirty or more cavalry. They had also a report of a body of our cavalry coming up from West Point.

Last night we thought we heard the sound of a bugle near Mosquito Creek; this morning it was heard quite plainly, and during the forenoon some twenty or thirty cavalry made their appearance on Mosquito Point, north side of the Rappahannock.

Acting Master Street will give you all the particulars of the reconnoissance; the above are the main points.

I will send a vessel to Wicomico to-night, and can there learn about the forces north of the Rappahannock.

I presume that the troops near here have been withdrawn on account of the movement of Meade's army.

Very respectfully, your obedient servant,

EDWARD HOOKER,
Actg. Vol. Lieut., U. S. Navy, Comdg. First Div. Potomac Flotilla.

Commander F. A. PARKER, U. S. Navy,
Commanding Potomac Flotilla.

Report of Commander Parker, U. S. Navy, commanding Potomac Flotilla, regarding detail of vessels for Rappahannock River.

U. S. S. ELLA,
Potomac Flotilla, March 11, 1864.

SIR: Major-General Butler having requested me to "watch the Rappahannock from 10 miles below Urbana to its mouth," I have detailed the vessels necessary for this purpose.

I have the honor to be, very respectfully, your obedient servant,

FOXHALL A. PARKER,
Commander, Commanding Potomac Flotilla.

Hon. GIDEON WELLES,
Secretary of the Navy.

Order of Commander Parker, U. S. Navy, commanding Potomac Flotilla, to Acting Volunteer Lieutenant Hooker, U. S. Navy, commanding First Division, regarding cooperation with the Army in Rappahannock River.

U. S. S. ELLA,
Potomac Flotilla, March 11, 1864.

SIR: You are hereby directed to lend such assistance in the Rappahannock as you can to a force sent out from Yorktown by General Butler, by cruising with part of your force until Tuesday morning next, between the mouth of the Rappahannock to within 10 miles of Urbana.

You will not allow any boats to land, and should you do so, not permit them under any circumstances to go from under the cover of your guns.

Respectfully, yours,

FOXHALL A. PARKER,
Commander, Commanding Potomac Flotilla.

Acting Volunteer Lieutenant EDWARD HOOKER,
Commanding First Division Potomac Flotilla.

Report of Commander Parker, U. S. Navy, commanding Potomac Flotilla, of information obtained by reconnoissance in Rappahannock River.

U. S. S. ELLA,
Potomac Flotilla, March 11, 1864.

SIR: I have the honor to inform the Department that on the 8th instant a reconnoissance of the Rappahannock was made by my order as far up as Urbana, and the shore communicated with within sight of the enemy's pickets, information being gained thereby that there is now but a small rebel force between the York and Rappahannock rivers.

This information I have forwarded to General Butler.

I am, sir, very respectfully, your obedient servant,

FOXHALL A. PARKER,
Commander, Commanding Potomac Flotilla.

Hon. GIDEON WELLES,
Secretary of the Navy.

Report of Acting Volunteer Lieutenant Hooker, U. S. Navy, commanding First Division Potomac Flotilla, of affairs in his command.

U. S. S. YANKEE,
Rappahannock River, Virginina, March 12, 1864.

SIR: The *Fuchsia* has arrived with dispatches. I received information yesterday from General Butler of the advance of General Wistar, and informed him of our readiness to cooperate.

Lieutenant-Commander Babcock arrived this morning, with orders to put himself under your command if you were here. I am acting in conjunction with him. He will leave again to-night or to-morrow morning.

I send up by the *Fuchsia* a refugee, whose story, so far as it goes, tends to confirm the reports of the complete evacuation of these peninsulas. He also says that all the remaining wharves on this river are destroyed.

From Wicomico I have information that the troops at Heathsville were recalled when General Meade made advance.

I have also information that a quantity of commissary stores were stored in the jail at Heathsville, and are believed to be there now.

I have no other news of importance.

Very respectfully, your obedient servant,

E. HOOKER.

Commander F. A. PARKER, U. S. Navy,
Commanding Potomac Flotilla.

P. S.—Lieutenant-Commander Babcock is from Admiral Lee's squadron, and has three vessels with him.

Letter from Acting Master Schulze, U. S. Navy, commanding U. S. S. Jacob Bell, to Acting Volunteer Lieutenant Hooker, U. S. Navy, commanding First Division Potomac Flotilla, regarding army expedition up the Piankatank River.

U. S. S. JACOB BELL,
Rappahannock River, March 20, 1864.

SIR: The U. S. S. *Yankee* arrived here this morning at 12:30 a. m. and delivered mails, dispatches, etc. Captain Arthur reported to me

yesterday that his engineer had made a mistake in his coal account, and that he had about 10 tons less than he expected, so I send him up first. If he takes his coal in Monday he can be back here by Tuesday evening, March 22. The *Tulip* has got 9 tons of coal yet, and as her day to clean boilers is the 23d of March, it will just come right. I have got about 17 tons and the *Currituck* 24 tons of coal.

There is quite an army expedition up the Piankatank. Thursday night five transports and two army gunboats, with 4,000 troops, under the command of General Graham, entered, but I had wind of it and stationed two boats there. That surprised them a little, and the commanding officers reported to Captain [E. P.] Hill and showed their papers. I have since you left kept a senior officer's journal (which I herewith enclose), so that you may see what has been going on since you left. I am getting along very well with the commanding officers; they are aware that I intend to have my orders obeyed to the letter. I also send the two pilots as requested. I shall carry out your routine and instructions in every respect, and on your return you will find the First Division in the same good order and discipline as you left it.

Hoping to see you soon on the Rappahannock, I remain, respectfully, your obedient servant,

G. C. SCHULZE,
Acting Master, U. S. Navy, and Senior Officer on the Rappahannock.

Acting Volunteer Lieutenant EDWARD HOOKER, U. S. Navy,
Commanding First Division Potomac Flotilla.

Letter from Acting Master Schulze, U. S. Navy, commanding U. S. S. Jacob Bell, to Acting Volunteer Lieutenant Hooker, U. S. Navy, commanding First Division Potomac Flotilla, regarding withdrawal of army expedition from Piankatank River.

U. S. S. JACOB BELL,
Rappahannock River, March 24, 1864—11:30 a. m.

SIR: The *Freeborn* has not yet arrived. As I can not detain the *Tulip* any longer, I will send her up to-day at 12 m. The army expedition has left the Piankatank without having derived any moral or material benefits. We have had very bad weather here—storm, snow, and thick fog. To-day it is clear, cool, and pleasant.

The *Currituck* is at the Wicomico with about 18 tons of coal. The *Yankee* has 47, the *Bell* 10.

There is nothing new here; all is quiet on the Rappahannock and Piankatank. Enclosed please find senior officer's journal.

Very respectfully, your obedient servant,

G. C. SCHULZE, U. S. Navy,
Acting Master and Senior Officer Rappahannock Station.

Acting Volunteer Lieutenant EDWARD HOOKER, U. S. Navy,
Commanding First Division Potomac Flotilla.

Circular.

MARCH 10, 1864.

The commanding officer announces to all serving under him that he has appointed Lieutenant-Commander Thomas H. Eastman captain of the flotilla, who is to be respected and obeyed accordingly.

When not with him, his presence on board of any vessel of the flotilla will be denoted by the Second Division flag at the masthead.

FOXHALL A. PARKER,
Commander, Commanding Potomac Flotilla.

Order of Commander Parker, U. S. Navy, commanding Potomac Flotilla, to Acting Volunteer Lieutenant Hooker, U. S. Navy, commanding First Division, defining the limits of his command.

U. S. S. ELLA,
Potomac Flotilla, March 28, 1864.

SIR: Your command will hereafter extend from the Piankatank to the mouth of the St. Mary's River, and the disposition of the vessels of it will be as follows:

Freeborn.—Mouth of the Piankatank.

Yankee and *Tulip.*—Mouth of the Rappahannock.

Currituck.—Mouth of Rappahannock to Smith's Point.

Bell.—Smith's Point to Point Lookout.

Bacon.—At Point Lookout.

Anacostia.—To be stationed at Point Lookout cruising at night between the point and the mouth of the St. Mary's River.

The *Matthew Vassar* has been removed from your division, and will be placed at the coal depot in St. Inigoes.

Respectfully, yours,

FOXHALL A. PARKER,
Commander, Commanding Potomac Flotilla.

Acting Volunteer Lieutenant EDWARD HOOKER, U. S. Navy,
Commanding First Division Potomac Flotilla.

Report of Commander Parker, U. S. Navy, commanding Potomac Flotilla, of the capture of two blockade runners.

U. S. S. ELLA,
Potomac Flotilla, March 29, 1864.

SIR: A strange canoe having been discovered on the banks of this river yesterday, an officer and five men were placed in ambush in its vicinity last night under the direction of Lieutenant-Commander Eastman, who succeeded in capturing two blockade runners, William H. Railly and Henry C. Dameron, just as they were in the act of stepping into the canoe laden with contraband articles for the Virginia shore. I have sent the prisoners to the provost-marshal at Point Lookout, Md.

I have the honor to be, very respectfully, your obedient servant,

FOXHALL A. PARKER,
Commander, Commanding Potomac Flotilla.

Hon. GIDEON WELLES,
Secretary of the Navy, Navy Department, Washington, D. C.

Report of Commander Parker, U. S. Navy, commanding Potomac Flotilla, of the recovery of four launches belonging to the Army.

U. S. S. ELLA,
St. Mary's River, March 31, 1864.

SIR: I have the honor to inform the Department that I have here four launches picked up adrift off the mouth of the Rappahannock by

the brig *J. C. Bickman* on the 18th instant, which I shall send to General Marston at Point Lookout.

These boats with three others, I understand, were lost by General Graham on his late expedition to the Piankatank.

I have given orders to the vessels blockading the rivers from Point Lookout to the Piankatank to institute a strict search for the three that are missing.

I am, sir, very respectfully, your obedient servant,

FOXHALL A. PARKER,
Commander, Commanding Potomac Flotilla.

Hon. GIDEON WELLES,
Secretary of the Navy, Washington, D. C.

Report of Commander Parker, U. S. Navy, commanding Potomac Flotilla, regarding disposition of vessels under his command.

U. S. S. ELLA,
Potomac Flotilla, April 1, 1864.

SIR: I have the honor to make to the Department the following report of the stations of the vessels under my command:

Freeborn.—Mouth of the Piankatank River.
Yankee and *Tulip.*—Mouth of the Rappahannock River.
Currituck.—Mouth of Rappahannock to Smith's Point.
Jacob Bell.—Smith's Point to Point Lookout.
William Bacon.—At Point Lookout.
Anacostia.—Cruising between Point Lookout and St. Mary's River.
Matthew Vassar and *Eureka.*—At the coal depot in St. Mary's River.
Fuchsia.—Mouth of St. Mary's to Ragged Point, Md. [Va.]
Sophronia.—Off Piney Point, Md. (guard vessel).
Dragon.—Ragged Point to Great Wicomico River.
Primrose.—Great Wicomico to Lower Cedar Point.
Teaser.—Lower Cedar Point to Nanjemoy Creek.
Commodore Read.—Nanjemoy to Liverpool Point.
Cœur de Lion.—Liverpool Point to Hallowing Point.
Adolph Hugel.—Off Alexandria (guard vessel).

The *Resolute* is kept in reserve as a dispatch boat and to take the place when necessary of a disabled vessel while the latter is being repaired.

The *Dragon*, *Primrose*, *Cœur de Lion*, *Wyandank*, and *Western World* are at present at the Washington navy yard. The two first mentioned will rejoin the flotilla in a few days, the *Cœur de Lion* and *Wyandank* in six weeks, and the *Western World* not before August or September.

I think the efficiency of the flotilla would be materially increased by the addition of another gunboat similar to the *Commodore Read*, the more especially in the event of any of the rivers within the limits of my command becoming the theater of active operations during the approaching campaign, and I would respectfully urge upon the Department the importance of attaching to this flotilla a marine guard of 100 men. I often hear of parties of rebel cavalry and infantry fifty or sixty strong venturing far down upon the peninsulas between the Potomac and Rappahannock and Rappahannock and Piankatank rivers which I could readily capture by throwing a fieldpiece well supported by steady infantry in their rear. The marines could be located in tents at the coal depot in the St. Mary's, and would be as well drilled as at the

barracks in Washington and as available for any duty which the Department might require of them besides serving as a guard for the depot which I consider desirable.

I am, sir, very respectfully, your obedient servant,

FOXHALL A. PARKER,
Commander, Commanding Potomac Flotilla.

Hon. GIDEON WELLES,
Secretary of the Navy.

Report of Commmander Parker, U. S. Navy, commanding Potomac Flotilla, proposing the extension of telegraph lines.

U. S. S. ELLA,
St. Mary's River, Maryland, April 7, 1864.

SIR: As the telegraph wires from Washington to Point Lookout pass within 3½ miles of this place, I would respectfully suggest that a branch be run here, as it may be of very great importance to the Government and to the Army to be enabled to communicate with me quickly at some period during the approaching campaign.

I have the honor to be, very respectfully, your obedient servant,

FOXHALL A. PARKER,
Commander, Commanding Potomac Flotilla.

Hon. GIDEON WELLES,
Secretary of the Navy.

Report of Commander Parker, U. S. Navy, commanding Potomac Flotilla, requesting the addition to his force of three vessels.

U. S. S. ELLA,
Potomac Flotilla, April 7, 1864.

SIR: The *Cœur de Lion*, *Wyandank*, and *Western World*, which are now at the U. S. navy yard, Washington, for repairs, will not be ready for service for many weeks to come, and as I find my present force inadequate to perform the duties required of it, I would respectfully request that an addition of three serviceable vessels be made to it, one of which should be similar in all respects to the *Commodore Read*.

The tug *Leslie* would be very valuable here as a dispatch vessel, and enable me to detail the *Resolute*, now employed in this service, for blockade duty.

I have the honor to be, very respectfully, your obedient servant,

FOXHALL A. PARKER,
Commander, Commanding Potomac Flotilla.

Hon. GIDEON WELLES,
Secretary of the Navy.

Order of the Secretary of the Navy to commandant navy yard, Washington, regarding U. S. S. Leslie.

NAVY DEPARTMENT, *April 11, 1864.*

SIR: Order the tug *Leslie* to report to Commander F. A. Parker for duty in the Potomac Flotilla.

Very respectfully, etc.,

GIDEON WELLES,
Secretary of Navy.

Commodore J. B. MONTGOMERY,
Commandant Navy Yard, Washington.

Report of Commander Parker, U. S. Navy, commanding Potomac Flotilla, transmitting report of expedition to Machodoc Creek, Virgina.

U. S. S. ELLA,
Potomac Flotilla, April 15, 1864.

SIR: General Hinks, commanding at Point Lookout, having desired my cooperation in an expedition to Machodoc Creek, Virginia, on the 13th instant, I detailed for this purpose the gunboats *Yankee*, *Fuchsia*, *Anacostia*, and *Teaser*, under command of Lieutenant-Commander Eastman, a copy of whose report I herewith enclose.

I have the honor to be, very respectfully, your obedient servant,

FOXHALL A. PARKER,
Commander, Commanding Potomac Flotilla.

Hon. GIDEON WELLES,
Secretary of the Navy.

[Enclosure.]

U. S. S. YANKEE, *April 14, 1864.*

SIR: In obedience to your order I went on board of the *Resolute* and convoyed the army steamer *Long Branch*, with General [E. W.] Hinks and a battalion of soldiers on board, leaving St. Mary's at 5 a. m. on the 13th, and arriving at Machodoc Creek at 8 a. m. After communicating with General Hinks, I led the way into an anchorage and covered the landing of the forces. Nothing was seen of the enemy except a few cavalry, thirty or forty in number, on the right side of Machodoc, and they retired on the landing of four armed boats' crews from the *Teaser* and *Anacostia*, which vessels had joined me, according to orders.

In tow of these boats were two small boats of the *Long Branch*, carrying twelve soldiers, and as the *Long Branch* had come unprovided with any means of landing, I transported in our boats at this time twenty soldiers.

A large quantity of tobacco and a man named Maddox were taken in the house near the landing.

Mr. Maddox was sent to the *Long Branch*, and most of the tobacco.

Five boxes of tobacco were taken to the *Teaser*, and I have since delivered them to you. I also visited Currioman Bay and Nomini, but discovered nothing of importance, and on the morning of the 14th I detailed the *Anacostia* to assist General Hinks in transporting his force to Point Lookout. I then, with the *Yankee*, *Teaser*, and *Fuchsia* in company, got under way for St. Mary's, and on my way down the river I exercised this division in forming line and column in accordance with the teachings of Parker's Squadron Tactics under Steam, and I was struck with the simplicity and ease with which a squadron may be maneuvered, and also am glad to be able to say that I have the honor to be the first officer of the U. S. Navy to record an experience in the use of that work.

I wish here to report to you that the *Yankee*, *Fuchsia*, *Teaser*, *Resolute*, and *Anacostia* did all of their duties well and promptly, and especially with regard to the evolutions, the signals being answered quickly and not a single mistake being made.

I arrived at St. Mary's at 5 p. m. and reported in person to you.

Respectfully,

T. H. EASTMAN,
Lieutenant-Commander, U. S. Navy.

Commander F. A. PARKER,
Commanding Potomac Flotilla.

Letter from Acting Master Street, U. S. Navy, commanding U. S. S. Fuchsia, to Commander Parker, U. S. Navy, commanding Potomac Flotilla, regarding breach of blockade.

U. S. S. FUCHSIA,
Potomac Flotilla, April 16, 1864.

SIR: Believing that there is considerable crossing in the vicinity of Breton's Bay, St. Clement's Bay, and Wicomico River, Maryland, to Virginia, and being acquainted with the various points, I would respectfully ask permission to cruise in that locality for a few days.

Very respectfully, your obedient servant,

WM. TELL STREET,
Acting Master, Commanding.

Commander FOXHALL A. PARKER, U. S. Navy,
Commanding Potomac Flotilla.

Order of Commander Parker, U. S. Navy, commanding Potomac Flotilla, to Acting Volunteer Lieutenant Hooker, U. S. Navy, commanding First Division, to communicate verbally.

U. S. S. ELLA,
Potomac Flotilla, April 18, 1864.

SIR: I will be off the mouth of the river about 8 p. m., and I desire no signals of any kind to be made. We will communicate verbally.

You will have one vessel stationed off the outer buoy, and direct her to remain until the last vessel has come in, when we will rendezvous at Butler's Hole.

Order your division to make no signals this night.

Respectfully,

FOXHALL A. PARKER,
Commander, Commanding Potomac Flotilla.

Acting Volunteer Lieutenant EDWARD HOOKER,
Commanding First Division Potomac Flotilla.

Report of Commander Parker, U. S. Navy, commanding Potomac Flotilla, of expedition to Circus Point, Rappahannock River, and engagement of U. S. S. Eureka with a Confederate land force.

U. S. S. COMMODORE READ,
Chesapeake Bay, April 22, 1864.

SIR: Having learned from various sources that the rebel Government had established a ferry at Circus Point, a few miles below Tappahannock, on the Rappahannock River, and was busily engaged in collecting boats at same point on the river for the purpose of attacking the blockading vessels, I proceeded thither with a portion of this flotilla on the 18th instant, where I remained until this evening, visiting both banks of the river and all its various creeks (some of which, I was told, had not before been entered during the war), from Circus Point to Windmill Point, with the following result:

Two ferries broken up; 7 large lighters each capable of carrying 100 men; 3 pontoon boats, 22 large skiffs and canoes, 200 white-oak beams and knees (large enough for the construction of a sloop of war), 500 cords of pine wood, and 300 barrels of corn destroyed. Twenty-two fine boats (one of which is fitted for carrying small arms), 1,000 pounds

of bacon, 2 horses, 60 bushels of wheat, a chest of carpenters' tools, and many other articles (a correct list of which will be sent to the Department at an early day) brought off.

Five refugees and 45 contrabands (men, women, and children) were received on board this vessel and landed in Maryland, with the exception of five stout fellows, whom I shipped.

At Bowlers Rocks, on the south side of the Rappahannock, the landing of our men was opposed by a large force of cavalry (said to be 500), which was kept at bay by the fire of the *Eureka*, commanded by Acting Ensign Hallock, and a howitzer launch in charge of Acting Master's Mate Eldridge. Acting Master W. T. Street, who had charge of this expedition, showed good judgment and proved himself a valuable and efficient officer. He speaks highly of Acting Ensign Roderick and Acting Master's Mate Borden, who accompanied him on shore.

In Parrott's Creek 8 seamen, led by Acting Ensign Nelson, chased 6 of the rebel cavalry.

Yesterday afternoon, as the *Eureka* got within 30 yards of the shore just below Urbana, where I had sent her to capture two boats hauled up there, a large number of rebels, lying in ambush, most unexpectedly opened upon her with rifles and a piece of light artillery. Thus taken by surprise, Acting Ensign Hallock displayed admirable presence of mind, and I think not more than five seconds had elapsed before he returned the fire from his light 12-pounder and with small arms, and, although the little *Eureka* with officers and men has but sixteen souls on board, for some ten minutes (during which time the fight lasted), she was one sheet of flame, the 12-pounder being fired about as fast as a man would discharge a pocket pistol. The rebels were well thrashed, and I think must have suffered considerably. They fortunately fired too high, so that their shells and bullets passed over the *Eureka* without injury to the vessel or crew. It was quite a gallant affair and reflects a great deal of credit upon both the officers and men of the *Eureka*, a list of whom I herewith enclose.

This morning, observing a party of eighteen men at a distance of about 2 miles from this ship with muskets slung over their backs, crawling on their hands and knees to get a shot at some of our men then on shore, I directed a shell to be thrown at them from a 100-pounder Parrott gun, which struck and exploded right in their midst, killing and wounding, I think, a large number of them, as only four were seen after the explosion, who were, as might be supposed, running inland at the top of their speed.

Lieutenant-Commander Eastman, who had the detailing of the various expeditions, well sustained in the performance of this duty the reputation which he had already acquired of an officer of marked energy and ability.

I have it from the best authority that the rebels have placed torpedoes in the Rappahannock just above Bowlers Rocks, where this flotilla was anchored off Fort Lowry, off Brook's barn, opposite the first house above Leedstown, and at Layton's somewhat higher up. All these on the port hand going up.

Others are said to be placed at various points in the river from Fort Lowry to Fredericksburg. They have also been placed in the Piankatank River and in many of the creeks emptying into Chesapeake Bay.

I have the honor to be, very respectfully, your obedient servant,

FOXHALL A. PARKER,
Commander, Commanding Potomac Flotilla.

Hon. GIDEON WELLES,
Secretary of the Navy.

Order of Commander Parker, U. S. Navy, commanding Potomac Flotilla, to Acting Volunteer Lieutenant Hooker, U. S. Navy, commanding First Division, transmitting communication from Major-General Butler, U. S. Army.

U. S. S. ELLA,
Potomac Flotilla, April 23, 1864.

SIR: Enclosed I send you copy of a letter from Major-General Butler in relation to a proposed raid by guerrillas, between the Piankatank and Saluda, Middlesex County. I desire you to keep a sharp lookout and be very careful to guard against surprise.

I have ordered the *Anacostia* to cruise between Smith's Point and Point Lookout and the *Jacob Bell* off the Piankatank with the *Freeborn*.

Respectfully,

FOXHALL A. PARKER,
Commander, Commanding Potomac Flotilla.

Acting Volunteer Lieutenant EDWARD HOOKER,
Commanding First Division Potomac Flotilla.

[Enclosure.]

HDQRS. DEPARTMENT OF VIRGINIA AND NORTH CAROLINA,
Fort Monroe, Va., April 19, 1864.

SIR: I have the honor to forward you a copy of a dispatch received from the provost-marshal at Eastville, Va.:

APRIL 18, 1864.

I am informed by a rebel mail carrier, captured to-day, that guerrillas are preparing for a raid at some spot between the Piankatank and Saluda, Middlesex County. I presume this raid is intended for this shore, if on foot as represented. Further information leads me to believe the information correct.

FRANK J. WHITE,
Major and Provost-Marshal.

This dispatch is sent for your information and such action as you may think proper.

I have the honor to be, your obedient servant,

BENJAMIN F. BUTLER,
Major-General, Commanding.

Commander F. A. PARKER,
Commanding Potomac Flotilla.

Report of Commander Parker, U. S. Navy, commanding Potomac Flotilla, regarding capture of two spies and three deserters from the Confederate Army.

U. S. S. ELLA,
Potomac Flotilla, April 25, 1864.

SIR: I have the honor to report that at daylight on the 19th instant the U. S. S. *Resolute* captured, off Lynch's Point, Va., two spies, with passes from Brigadier-General Chambers [J. R. Chambliss, jr.?], of the rebel Army, who have been delivered to the provost-marshal at Point Lookout.

On the morning of the 21st instant the same vessel picked up a boat between St. George's Island and the Virginia shore, containing three deserters from the rebel Army, who were also turned over to the provost-marshal at Point Lookout.

I am, sir, very respectfully, your obedient servant,

FOXHALL A. PARKER,
Commander, Commanding Potomac Flotilla.

Hon. GIDEON WELLES, *Secretary of the Navy.*

Report of Acting Volunteer Lieutenant Hooker, U. S. Navy, commanding First Division Potomac Flotilla, regarding movements of the Confederate party which captured tug Titan.

U. S. S. YANKEE,
Rappahannock River, Virginia, April 28, 1864.

SIR: I have information which I deem trustworthy that Lieutenant Fitzhugh has crossed the bay into Maryland with a party of men. He is the same man who captured the *Titan*. He no doubt meditates a similar capture, and a return to the Piankatank, in which river they have laid torpedoes.

I shall have the river well watched. At present, however, we have a small force for it.

It was also reported that Wood was down here again, but I am inclined to think that it is the torpedo placers and not Wood.

There are said to be seven torpedoes in the Rappahannock. One of them it is reported was exploded a few days ago by a trafficking canoe, which ran by accident upon it. Its destructive powers are said to have been brilliantly illustrated. I have doubts about the truth of the story, however.

There is no other news of importance.

I sent (by a transport which was passing) information to General Butler of the reported crossing of Fitzhugh, etc.

Very respectfully, your obedient servant,
EDWARD HOOKER,
Actg. Vol. Lieut., U. S. Navy, Comdg. First Div., Potomac Flotilla.

Commander F. A. PARKER, U. S. Navy,
Commanding Potomac Flotilla.

Report of Commander Parker, U. S. Navy, commanding Potomac Flotilla, regarding expedition to Carter's Creek, Rappahannock River.

U. S. S. ELLA,
Potomac Flotilla, May 3, 1864.

SIR: I have the honor to report to the Department that on the 29th ultimo an expedition under the command of Acting Volunteer Lieutenant Hooker was sent to Carter's Creek, and succeeded in destroying eleven boats and canoes, a large quantity of grain, and a number of log huts, said to have been used as barracks by the rebel soldiers. In approaching these, Acting Master Street, who had charge of the landing party, consisting of twenty-five seamen, fell in with a company of rebel cavalry, who, doubtless mistaking his force for the advance guard of a much larger one, put spurs to their horses and fled.

Contrabands report that they had previously destroyed a large number of commissary stores provided for their subsistence.

Lieutenant Hooker seems to have well planned the expedition, and Acting Master Street displayed boldness and decision in carrying it out.

I am, sir, very respectfully, your obedient servant,
FOXHALL A. PARKER,
Commander, Commanding Potomac Flotilla.

Hon. GIDEON WELLES,
Secretary of the Navy.

Report of Acting Volunteer Lieutenant Hooker, U. S. Navy, commanding First Division Potomac Flotilla, of an expedition to Carter's Creek, Virginia.

U. S. S. YANKEE,
Rappahannock River, Virginia, April 30, 1864.

SIR: I have the honor to report that yesterday, having stationed the *Freeborn* at the mouth of the river, and the *Tulip* at the bay creeks above, I proceeded in the *Yankee*, with the *Fuchsia* in company, to Carter's Creek, and entering advanced as far as the vessels could go, then sent three armed boats under the command of Acting Master Street, who went as far as the boats could go, landed and pushed on toward Whitestone, the headquarters of the Lancaster cavalry. Having advanced about half a mile he was met by a company of cavalry, who delivered their fire but were soon routed. Soon afterwards a large fire was seen near the place and Captain Street pushed forward to it and found that they were burning their commissary stores. We also discovered a place where they were building a new camp, large enough to accommodate nearly 1,000 men. Several log houses were already erected and some tents; these were destroyed. Finding a force collecting in his front, he then fell back to his boats, destroying some grain and forage on his way.

While Acting Master Street was thus occupied, I had employed the remaining boats in overhauling some stores and cleaning out the small creeks, etc., near the vessels.

The results of the expedition are one camp destroyed (they burning their own stores, etc.), a large quantity of grain destroyed, eleven boats and canoes destroyed and seventeen brought away, a number of horses, sheep, hogs, etc., brought away; also a number of contrabands brought off.

The eatable stock I have divided among the vessels, and send the *Freeborn* up with the horses, canoes, and contrabands.

I further learned that a large (cavalry) force is crossing the Rappahannock at Port Royal with the supposed intention of getting between our Army and Washington.

Also that there are in the Rappahannock River, at Bowlers Rocks, 150 yards above Union wharf, two torpedoes; at Lowry's Point, two; at Jones Point, just below Tappahannock, two; at Devil's Neck, just above Leedstown, two; at the Gum Bottom, below Bristoe [Brisco] mines, one.

Very respectfully, your obedient servant,

EDWARD HOOKER,
Actg. Vol. Lieut., U. S. Navy, Comdg. First Div. Potomac Flotilla.

Commander F. A. PARKER, U. S. Navy,
Commanding Potomac Flotilla.

Order of Commander Parker, U. S. Navy, commanding Potomac Flotilla, to Acting Volunteer Lieutenant Hooker, U. S. Navy, commanding First Division, enjoining vigilance against repetition of the affair of the Titan.

U. S. S. ELLA,
Potomac Flotilla, May 2, 1864.

SIR: I have received your communication of April 28, and trust that Lieutenant Fitzhugh will not be permitted by you to repeat the affair

of the *Titan*, the force under your command being in my opinion more than adequate to prevent such an occurrence. Should he, however, do so, and succeed in getting into the Piankatank or Rappahannock with a vessel, it must be remembered that there can be no danger from torpedoes in following closely in his wake.

Respectfully,

FOXHALL A. PARKER,
Commander, Commanding Potomac Flotilla.

Acting Volunteer Lieutenant EDWARD HOOKER,
Commanding First Division Potomac Flotilla.

Report of Commander Parker, U. S. Navy, commanding Potomac Flotilla, of the destruction, by U. S. S. Currituck, of a quantity of grain.

U. S. S. ELLA,
Potomac Flotilla, May 3, 1864.

SIR: I have the honor to report to the Department that on the 27th ultimo Acting Master Hill, commanding the U. S. S. *Currituck*, succeeded in destroying 2,000 bushels of grain, which were in process of transportation to Richmond.

I am, sir, very respectfully, your obedient servant,

FOXHALL A. PARKER.
Commander, Commanding Potomac Flotilla.

Hon. GIDEON WELLES,
Secretary of the Navy.

Report of Acting Volunteer Lieutenant Hooker, U. S. Navy, commanding First Division Potomac Flotilla, regarding security of Piankatank and Rappahannock rivers.

U. S. S. YANKEE,
Rappahannock River, Virginia, May 5, 1864.

SIR: Yours of the 2d instant is at hand. In reply, permit me to say that I have no idea of permitting Fitzhugh to get into either the Piankatank or Rappahannock. I do not think any attempt would be made to get a valuable vessel into the Piankatank, as the *Titan* showed them the folly of it, and my thought about the torpedo was that some small steamer, if captured, might try that river in hopes of getting a gunboat destroyed.

My allusion to small force was on account of the vessels being absent for coal and repairs, leaving only the *Currituck* here with me. The want only existed for one or two days.

I think you may feel assured that no vessel will get into either river.

Very respectfully, your obedient servant,

EDWARD HOOKER,
Actg. Vol. Lieut., U. S. Navy, Comdg. First Div. Potomac Flotilla.

Commander F. A. PARKER, U. S. Navy,
Commanding Potomac Flotilla.

Letter from Acting Volunteer Lieutenant Hooker, U. S. Navy, commanding First Division, to Commander Parker, U. S. Navy, commanding Potomac Flotilla, regarding attack upon U. S. S. Wm. G. Putnam, in York River, Virginia.

U. S. S. YANKEE,
Rappahannock River, Virginia, May 7, 1864.

SIR: I send up the *Fuchsia* for coal; she is all out. The *Freeborn* and *Bell* will be out of coal on Monday, the *Yankee* on Wednesday, and the *Currituck* on Friday or Saturday. If I take coal from the *Currituck*, she, of course, will come into conflict with the others. As the vessels however only want coal, I think I can keep them separated.

I have no news to communicate; everything is quiet, although I understand an expedition was planned a few nights ago to board the *Freeborn*, in the mouth of the Piankatank, which failed, as she was underway.

I am informed, too, that a few nights ago an attempt was made upon the *Putnam*, in York River, which was signally repulsed, costing, it is said, the lives of every one of the assailants. I trust that if the attempt should be made here we should be able to give as good an account of ourselves.

Very respectfully, your obedient servant,

EDWARD HOOKER,
Actg. Vol. Lieut., U. S. Navy, Comdg. First Div. Potomac Flotilla.

Commander F. A. PARKER, U. S. Navy,
Commanding Potomac Flotilla.

[Telegram.]

NAVY DEPARTMENT, *May 9, 1864.*

The Army of the Potomac are to send their wounded to Fredericksburg. They will open communication through Belle Plain. General Halleck asks that a couple of lightdrafts ascend to Fredericksburg, if possible. Be very careful of torpedoes, and send a prudent man to command, who will use sound discretion about going up and the utmost care.

G. V. FOX.

Commander F. A. PARKER,
Commanding Potomac Flotilla, St. Marys, Md.

[Telegram.]

HEADQUARTERS POTOMAC FLOTILLA,
Piney Point, May 9, 1864.

Commander Parker is now on the river coming down, and will be here about 7 a. m. I am fitting the vessels, and will have everything ready to start by the time he arrives.

T. H. EASTMAN,
Commanding, U. S. Navy.

G. V. FOX,
Assistant Secretary of Navy.

[Telegram.—Cipher.]

NAVY DEPARTMENT, *May 9, 1864.*

Send one or two of your boats to Potomac Creek and Aquia Creek to be on the watch for communications from the Army.

GIDEON WELLES,
Secretary of the Navy.

Commander F. A. PARKER,
Comdg. Potomac Flotilla, Naval Depot, St. Mary's River, Maryland.

[Telegram.]

ST. MARY'S, *May 10, 1864.*
(Received at Washington 7:50 p. m.)

I have just come from Potomac Creek. Heavy distant firing was heard there from daylight up to 11 o'clock. From 11 until 12:30 o'clock the firing had apparently ceased.

FOXHALL A. PARKER,
Commanding Potomac Flotilla.

G. V. FOX,
Assistant Secretary Navy.

Commodore Parker wishes to have an important conversation with Captain Fox.

[Telegram.]

ST. MARY'S, *May 10, 1864.*
(Received at Washington 8:30 p. m.)

About 8 feet at Fredericksburg. The vessels I send can not get nearer Fredericksburg than 4 miles.

F. A. P[ARKER].

G. V. FOX.

[Telegram.]

ST. MARY'S, *May 10, 1864.*
(Received at Washington 8:30 p. m.)

I am hard at work preparing more fenders for the flotilla.

F. A. P[ARKER].

G. V. FOX.

[Telegram.]

NAVY DEPARTMENT, *May 10, 1864.*

It is reported that there are torpedoes in the Rappahannock about 5 miles below Port Royal, near a large frame building on the south side, opposite a creek. Use great caution in advancing and run no risks.

GIDEON WELLES,
Secretary.

Commander F. A. PARKER,
Commanding Potomac Flotilla, St. Mary's, Md.

[Telegram.]

ST. MARY'S, *May 10, 1864.*
(Received at Washington 9:20 p. m.)

With the approval of the Navy Department I would prefer attempting the ascent of the Rappahannock to Fredericksburg myself.

FOXHALL A. PARKER,
Commander of Potomac Flotilla.

G. V. FOX,
Assistant Secretary of Navy.

[Telegram.]

NAVY DEPARTMENT, *May 10, 1864.*

My opinion is that you had better remain in the Potomac and assist at Belle Plain or Aquia Creek. It is not necessary at present to run risks in the Rappahannock.

G. V. FOX,
Assistant Secretary.

Commander F. A. PARKER,
Commanding Potomac Flotilla, St. Mary's, Md.

[Telegram.]

NAVY DEPARTMENT, *May 10, 1864.*

General Halleck says that 1,500 cavalry have gone to Fredericksburg and the senior officer there can be called upon to use his discretion. Hooker ought to move up only in the daytime with boats ahead. It is not a necessity to call for risk to the lives of officers and men. It is hardly known here what the senior officer at Fredericksburg will do. After giving orders to Hooker, I would go and see him and act on your discretion after consulting with him. Perhaps, by protecting the banks of the Rappahannock, transports might go up. This is for you to examine into and advise. A telegraphic cable is to cross at Mathias Point, thence to Potomac Creek or Belle Plain.

G. V. FOX.

Commander F. A. PARKER,
Commanding Potomac Flotilla.

Order of Lieutenant-Commander Eastman, U. S. Navy, to Acting Volunteer Lieutenant Hooker, U. S. Navy.

U. S. S. KING PHILIP, *May 10, 1864.*

SIR: You will proceed here with all dispatch; the commander wishes to see you.

You will order the First Division not to go up the Rappahannock at all.

I will give you extra men to coal the *Yankee* as soon as you arrive.

Respectfully,

T. H. EASTMAN,
Fleet Captain.

Acting Volunteer Lieutenant E. HOOKER,
Commanding Yankee.

Order of Commander Parker, U. S. Navy, to Acting Volunteer Lieutenant Hooker, U. S. Navy.

U. S. S. KING PHILIP, *May 11, 1864.*

SIR: You must bear in mind while at Bowlers Rocks that it has been asserted, and may be true, that the *Satellite* and *Reliance* were not destroyed by Kilpatrick, but still exist.

I am, respectfully, yours,

FOXHALL A. PARKER,
Commander, Commanding Potomac Flotilla.

Acting Volunteer Lieutenant HOOKER, U. S. Navy,
Commanding First Division Potomac Flotilla.

[Telegram.]

ST. MARY'S, *May 11, 1864.*
(Received at Washington 5:10 p. m.)

The *Freeborn* broke her piston follower last night, on her way to the Rappahannock, and had to be towed back to this place. I have just returned from consultation with Lieutenant Hooker; have directed him to proceed to Bowlers Rocks, a few miles below Tappahannock, and thence to communicate to me all the information he can procure about the torpedoes in the Rappahannock. Am quite sure he can get to Bowlers Rocks without injury.

I am preparing torpedo catchers for all the vessels of the flotilla, and shall be ready to go to Fredericksburg whenever necessity may require.

Lieutenant-Commander Babcock sent word to me last night from York River that the rebels would endeavor to place torpedoes in Butler's Hole, the rendezvous during the day of the vessels blockading the Rappahannock. I think I know where the men who are engaged in this business live, and if I can get army cooperation from Point Lookout will endeavor to capture them to-night. The peninsula between the Rappahannock and Piankatank rivers is a guerrilla haunt which I would effectually break up had I 100 marines.

FOXHALL A. PARKER,
Commanding Potomac Flotilla, etc.

Hon. G. V. FOX.

[Telegram.]

NAVY DEPARTMENT, *May 11, 1864.*

Army cooperation must be obtained from Point Lookout at the discretion of the commanding officer there. No orders will be given at this time from War Department. Marines from the barracks are clumsy, and would require several days to move them. Any news from Potomac Creek?

G. V. FOX.

Commander F. A. PARKER,
St. Mary's.

[Telegram.]

ST. MARY'S, *May 12, 1864.*
(Received at Washington 9:40 p. m.)

The gunboats in the Rappahannock have exploded several torpedoes, picked up four safely near the mouth of the river, and are working on.

F. A. PARKER.

G. V. FOX,
Assistant Secretary Navy.

[Telegram.]

ST. MARY'S, *May 12, 1864.*
(Received at Washington 10:20 a. m.)

No news from Potomac Creek. I cooperated with the Army at Point Lookout, and the expedition left last night.

F. A. PARKER.

G. V. FOX,
Assistant Secretary Navy.

Report of Commander Parker, U. S. Navy, commanding Potomac Flotilla, of the capture of Midshipman Arthur, C. S. Navy.

U. S. S. KING PHILIP,
Potomac Flotilla, May 12, 1864.

SIR: I have the honor to inform the Department that on the night of the 6th instant Francis Arthur, a rebel midshipman, was caught by the *Primrose* while attempting to cross the Potomac from Virginia to Maryland, and sent to the provost-marshal at Alexandria.

I am, sir, very respectfully, your obedient servant,

FOXHALL A. PARKER,
Commander, Commanding Potomac Flotilla.

Hon. GIDEON WELLES,
Secretary of the Navy.

[Telegram.]

NAVY YARD, *May 13, 1864—2:07 p. m.*

I am just from Potomac and Aquia creeks. No news.

FOXHALL A. PARKER.

Hon. G. V. FOX.

Combined army and navy expedition to Mill Creek, Virginia, May 12, 13, 1864.

Report of Commander Parker, U. S. Navy, commanding Potomac Flotilla.

U. S. S. ELLA,
Navy Yard, Washington, May 16, 1864.

SIR: Information having reached me on the afternoon of the 11th instant that a party of rebels somewhere in the vicinity of Urbana were

engaged in placing torpedoes in the Rappahannock and Piankatank rivers, I determined to attack them without delay, and for this purpose asked army cooperation of Colonel Draper, commanding at Point Lookout, who not only furnished 300 infantry (colored) and 15 cavalry, but took command of them in person.

This force, with the addition of a howitzer and 35 seamen, under Acting Master Street, scoured the peninsula between the Rappahannock and Piankatank rivers and the Piankatank and Mobjack Bay, from the morning of the 12th to the night of the 13th instant, while Acting Volunteer Lieutenant Hooker during this time, with the boats of the *Yankee*, *Currituck*, and *Fuchsia*, swept for torpedoes in the rivers and creeks.

The result is that 11 of the rebels were killed, including their leader (Acting Master Maxwell), 10 taken prisoners, and a large number wounded; a gristmill with an immense quantity of grain burned, 30 boats destroyed, many mules and beeves brought off; 4 torpedoes exploded and 6 taken up, and 4 kegs of powder captured.

Of our soldiers, 1 was killed and 5 wounded. Colonel Draper speaks in high terms of Acting Master Street and the seamen who accompanied him on shore.

I have the honor to be, your obedient servant,

FOXHALL A. PARKER,
Commander, Commanding Potomac Flotilla.

Hon. GIDEON WELLES,
Secretary of the Navy, Washington.

Report of Acting Volunteer Lieutenant Hooker, U. S. Navy, commanding First Division Potomac Flotilla.

U. S. S. YANKEE,
Rappahannock River, Virginia, May 14, 1864.

SIR: I have the honor to report that after I left St. Inigoes on the evening of the 11th instant I was met by the army tug *Commodore Foote*, with Colonel Draper on board, who informed me that he was ready to proceed on the raid proposed in the morning and that he had telegraphed to you to the effect. Believing that it would meet your approval, I at once proceeded to the wharf, and took on board troops, and then pushed forward to this place. Owing to the slowness of the transport *Star*, which was in company, I did not reach the Rappahannock as early as I wished to do, but before 9 a. m. (12th) I had landed, with my small boats only, all the troops, cavalry included, also my howitzer, its crew, and twenty more sailors as a support. These were all under the command of Acting Master Street, the army part being under the command of Colonel Draper himself.

As soon as the column moved forward I detailed one boat from each ship, the *Yankee*, *Currituck*, and *Fuchsia*, under the command of Acting Master Cook, to look for torpedoes, of which we exploded several and fished out two. About noon the *Resolute* arrived with a launch, and I at once sent it to Captain Cook, and with her he went up Mill Creek, destroying a large number of boats, some grain, etc.

In the meantime I had received word from shore that the expedition was pushing forward toward the Piankatank, and at 6 p. m., leaving all the other vessels, including the *Dragon*, which had arrived with a coal schooner, in charge of Acting Master Cook, I went to the Piankatank, and at 10 o'clock p. m. had made my way to the head of Fishing Bay,

and was in communication with the troops, learning that the movement had been a brilliant success. They had had a sharp fight, losing 1 soldier killed, 3 severely and 6 or 8 slightly wounded. The enemy had lost 8 killed and some prisoners. They were under the command of Acting Masters John Maxwell and [Bennett G.] Burley; of these, Maxwell is killed and Burley a prisoner. They also found some torpedoes and a quantity of powder, all of which I send up by the *Currituck*.

At daylight yesterday (13th) the rest of the fleet reached me, and I commenced at once to embark the troops for the purpose of carrying them across the river. At 10 o'clock a. m. they were all landed again on the south side of the Piankatank and en route for Mathews Court-House. At 8 o'clock p. m. they returned, having destroyed considerable property and brought away a large number of mules, cattle, etc. The night was intensely dark and raining in torrents; we therefore decided not to embark until daylight.

The *Currituck* brings up a part of the troops, plunder, etc.

The results of this expedition are: One mill and several granaries full of grain burned; several torpedoes exploded and 6 captured, together with a quantity of powder; about 30 boats destroyed; a large number of cattle and mules, with some carts, etc., brought off, to go to the contraband farm.

The casualties on our side are 1 killed and 5 wounded; the enemy's, 8 killed and 10 prisoners.

Our forces were 300 colored infantry and 15 cavalry, under Colonel Draper, and 35 sailors, with a howitzer, under command of Acting Master Street.

Colonel Draper and Captain Street both speak highly of the sailors on shore, while I can but express my satisfaction at the promptitude with which they have performed their duty by day and night, and in an almost constant rain storm.

Very respectfully, your obedient servant,

EDWARD HOOKER,
Actg. Vol. Lieut., U. S. Navy, Comdg. First Div. Potomac Flotilla.

Commander F. A. PARKER, U. S. Navy,
Commanding Potomac Flotilla.

Report of Acting Master Street, U. S. Navy, commanding U. S. S. Fuchsia, of the part borne by that vessel in the expedition to Mill Creek, Virginia.

U. S. S. FUCHSIA,
Rappahannock River, Virginia, May 14, 1864.

SIR: In obedience to your order of the 12th instant, I would respectfully beg leave to submit the following report of the expedition to Mill Creek, Middlesex County, Va.:

At 7 a. m., I arrived and anchored at the mouth of the creek, near the torpedoes. Manning my small boats, I rowed up the edge of the channel, followed by the transport steamer *Star* with troops on board, and succeeded in passing the torpedoes (pickets stationed to explode them having fled on our approach) and landing Colonel A. G. Draper, with 300 infantry and 15 cavalry, in safety.

After arriving on shore, we found the lines leading to two lines of torpedoes.

Leaving an officer with a boat at each line, with orders to report to you their whereabouts, I proceeded in company with Colonel Draper,

with a howitzer from the *Yankee* and about 35 seamen, to the house of Henry Barrack, where we had previously learned that 60 guerrillas or marines were encamped, but upon our arrival they were not to be found.

Taking with me a detachment of 100 men, I advanced up the Saluda road to the gristmill of Mr. Barrack, which we found to contain a large quantity of corn and wheat; this we burned, together with a sawmill and a quantity of lumber adjoining, then proceeding down the road leading to Fishing Bay on the Piankatank River, where by a previous arrangement we were to meet the steamers.

Coming up with Colonel Draper (who had taken another road) at the farm of Dr. Taylor, the force was halted to rest. On throwing out pickets in the heavy woods, they discovered four torpedoes, two of them complete, also powder, tar, beeswax, lines, etc., for their manufacture.

At 2 o'clock we again advanced, but had not proceeded over 2 miles, when a cavalry force was discovered ahead. Immediately a long line of skirmishers were extended, reaching from the Rappahannock to the Piankatank rivers, with the howitzer and sailors, in charge of Acting Ensign J. A. Havens, to guard the road.

Advancing in this manner for about 1 mile, we came upon a force of marines and cavalry concealed in a dense wood. After a brisk engagement of about twenty minutes we succeeded in routing them, killing 10, among them Acting Master [John] Maxwell of the rebel Navy, and captured 20, one of these, Acting Master Burley, a marine guerrilla, and I think from documents found on him, to be also a spy. He was one of the party who recently captured the tug *Titan*.

Of our force we had but 1 killed and 5 wounded. Not meeting with any further resistance, we arrived at Fishing Bay at 5 p. m., where we encamped for the night, the steamers not having arrived.

At 5:30 p. m., on the morning of the 13th, the steamers *Yankee*, *Fuchsia*, *Currituck*, and transport arrived (the *Jacob Bell* having arrived during the night), when the troops were embarked, bringing off five captured horses.

At 9 a. m., the expedition proceeded to Milford Haven, on the south side of the Piankatank, and at 11:30 landed and proceeded to Mathews Court-House, capturing 1 sergeant and 1 private; also 60 head of cattle, 30 horses, forage, etc. The object of the expedition being accomplished, we arrived at the landing at 7 p. m., but, being stormy and not being able to take on board the horses and cattle, the force encamped on shore for the night.

At 4 a. m. this morning we commenced to reembark the troops, and by 11 o'clock had all on board.

Mr. [C. H.] Cobb, master's mate, and J. E. Seeley, surgeon's steward, had charge of the seamen from this vessel.

The sailors performed their duties with their accustomed coolness and efficiency.

I would also mention John [L.] Jackson, pilot of this vessel, who accompanied the expedition as guide, being perfectly acquainted with the country, and the zeal he manifested in the cause is worthy of notice.

Respectfully, your most obedient servant,

WM. TELL STREET,
Acting Master, Commanding.

Acting Volunteer Lieutenant EDWARD HOOKER, U. S. Navy,
Commanding First Division Potomac Flotilla.

[Telegram.]

U. S. S. COMMODORE READ, *May 13, 1864.*
(Received at Washington, D. C., 11:50 p. m.)

SIR: General Abercrombie desires me to convoy the steamer *Star* to Fort Delaware with 400 rebel officers and 7,000 rebel prisoners. I have declined on account of having no boat here but the *Teaser*. Can I go myself? The *Primrose* has not yet returned from her service and the *Tulip* I have sent to St. Inigoes according to Captain Eastman's orders. There are two major-generals, Johnston [Edward Johnson] and Stewart [Brigadier-General George H. Steuart]. The *Star* is now alongside of the *Read*, as they have no guard on shore.

Being, respectfully, etc.,

W. H. SMITH,
Acting Master, Commanding Second Division Potomac Flotilla.

Commander PARKER,
Commanding Potomac Flotilla, Care of Navy Department.

[Telegram.]

WASHINGTON, D. C., *May 14, 1864.*

DEAR SIR: Have you determined whether Acting Master Smith can convoy the *Star* with the rebel prisoners on board, with the gunboat *Teaser*, or not?

Very respectfully, your obedient servant,

JAS. A. HARDIE,
Colonel, Inspector-General.

Hon. G. V. FOX,
Assistant Secretary of the Navy.

P. S.—It is necessary to reply in a few minutes, for the boat leaves this side for Belle Plain with telegraphic messages in twenty minutes, hence my disturbing you now.

[Endorsement.]

Convoy the *Star* as requested by General Abercrombie.

G. V. FOX,
Assistant Secretary.

Acting Master SMITH,
Of the Potomac Flotilla, Commanding Read.

Please send the above, as General A. is the best judge whether only one boat should be left there.

[Telegram.]

NAVY DEPARTMENT, *May 14, 1864.*

The *Read* has been sent to Fort Delaware to convoy 7,000 prisoners, and only the *Teaser* is left at Belle Plain and Aquia.

G. V. FOX,
Assistant Secretary.

Commander F. A. PARKER,
Commanding Potomac Flotilla, Washington Navy Yard.

[Telegram.]

ST. MARY'S, *May 14, 1864—11:10 a. m.*

At Belle Plain and Aquia Creek are the following vessels: *Teaser, Primrose, Eureka, Resolute. Cœur de Lion* on her way, by command of Commander Parker.

T. H. EASTMAN.

G. V. FOX,
Assistant Secretary Navy.

Report of Acting Volunteer Lieutenant Hooker, U. S. Navy, commanding First Division Potomac Flotilla, regarding proposed movement up the Rappahannock River.

U. S. S. YANKEE,
Rappahannock River, Virginia, May 14, 1864.

SIR: For the past two or three days I have worked my men day and night, and in an almost constant rain. I have been wet through and through myself, and am to-day suffering intensely from my shoulder. My officers and men are almost worn out. I therefore propose to rest my men over the Sabbath, and on Monday morning will move up the Rappahannock. I trust this course will meet your approval. Captain Cook will tell you how constantly the men have been kept moving.

I send you a horse and some other trophies of our raid.

Very respectfully, your obedient servant,

EDWARD HOOKER,
Actg. Vol. Lieut., U. S. Navy, Comdg. First Div. Potomac Flotilla.

Commander F. A. PARKER, U. S. Navy,
Commanding Potomac Flotilla.

Order of Commander Parker, U. S. Navy, commanding Potomac Flotilla, to Acting Volunteer Lieutenant Hooker, U. S. Navy, commanding First Division.

U. S. SCHOONER MATTHEW VASSAR, [*May 14, 1864.*]

SIR: You will proceed with the *Yankee, Fuchsia*, and *Jacob Bell* to Fredericksburg and order the *Currituck* and *Dragon* to keep the river open from Bowlers Rocks to the mouth.

By telegraph order from the commander:

Respectfully,

T. H. EASTMAN,
Fleet Captain.

Acting Volunteer Lieutenant E. HOOKER,
Commanding First Division Potomac Flotilla.

Order of Commander Parker, U. S. Navy, commanding Potomac Flotilla, to Acting Volunteer Lieutenant Hooker, U. S. Navy, commanding First Division, to proceed up Rappahannock River.

U. S. SCHOONER MATTHEW VASSAR, *May 15, 1864.*

SIR: You will proceed up the Rappahannock River in obedience to the orders given you by Commander Parker. You will observe the following rules in addition:

First. Leave the *Anacostia* off Piankatank.

Second. Let the *Currituck* keep the river open behind you all the time.

Third. When you get to Bowlers Rocks send the *Bell* to St. Inigoes with dispatches.

Fourth. Keep the vessels fitted with fenders ahead all the time.

You will send the *Dragon* with launch, crew, and officers to me immediately.

By telegraph order from the commander:

Respectfully,

T. H. EASTMAN,
Fleet Captain.

Acting Volunteer Lieutenant E. HOOKER,
Commanding First Division Potomac Flotilla.

[Telegram.]

ST. MARY'S, *May* [*15*], *1864.*

I have sent the *Freeborn*, *Fuchsia*, and *Yankee* to Fredericksburg under command of Acting Volunteer Lieutenant Hooker, agreeably to orders of the Department. In anticipation of this service I have been for the last week preparing torpedo fenders for the *Fuchsia* and *Freeborn*, which I trust will protect them from injury. The *Yankee* is ordered to bring up the rear, and the *Fuchsia*, which will be in advance, will drag a grapnel astern of her. Hooker is a very careful officer, but the service is a very hazardous one, as information lately received from the Rappahannock leads me to believe that there are torpedoes off Urbana, Union wharf, Bowlers Rocks, Circus Point, Fort Lowry, Tappahannock, Leeds [Leedstown], 5 miles below Port Royal, and at Port Royal. If a body of troops were sent from Fredericksburg on the south bank of the river to meet our advancing vessels, I think it would be well.

FOXHALL A. PARKER,
Commander.

G. V. FOX,
Assistant Secretary Navy.

Report of Acting Volunteer Lieutenant Hooker, U. S. Navy, commanding First Division Potomac Flotilla, of intended departure for Urbana.

U. S. S. YANKEE,
Rappahannock River, Virginia, May 16, 1864.

SIR: In accordance with your orders I send up the *Dragon*, with launch, crew, etc.

I have been confined to my bed since Saturday night and am scarcely out of it now.

Acting Master Street, with a detachment, has gone to Carter's Creek to secure Mr. Moody; from thence to Urbana, at which place I shall join him as soon as I can get the coal schooner away, probably before noon.

Your letter I have handed to my executive. The reason of the irregular sending of the message to you I will explain anon, of the other matters I will inform myself.

If I get through Bowlers Rocks to-night I will send the *Bell;* if not, I will send her to-morrow.

The launch's crew have done good service, and been prompt and obedient in the performance of their duty both day and night. I am well pleased with the officer in charge.

Very respectfully, your obedient servant,

EDWARD HOOKER,
Actg. Vol. Lieut., U. S. Navy, Comdg. First Div. Potomac Flotilla.

Lieutenant-Commander THOS. H. EASTMAN, U. S. Navy,
Fleet Captain, Potomac Flotilla.

[Telegram.]

NAVY DEPARTMENT, *May 16, 1864.*

Push up the Rappahannock and clear the river of torpedoes as fast as you can with safety and certainty of leaving no torpedoes behind you to blow up transports. At Fredericksburg you will find telegraphic communication open with Washington. Report from there at once.

GIDEON WELLES,
Secretary.

Commander F. A. PARKER,
Commanding Potomac Flotilla, St. Mary's, Md.

[Telegram.]

U. S. NAVY YARD,
Washington, [May 16, 1864]—11:30 p. m.

Your telegram just received.

I suppose the *Yankee* and *Fuchsia* are to-night at Tappahannock, and to-morrow afternoon will be at Port Royal on their way to Fredericksburg. If a cavalry force could be sent down the south side of the Rappahannock from Fredericksburg to Port Royal to-morrow, the passage of the gunboats would be greatly facilitated. When last heard from this morning, they were above Urbana and doing well.

Very respectfully, your obedient servant,

FOXHALL A. PARKER,
Commander, Commanding Potomac Flotilla.

Hon. GIDEON WELLES,
Secretary of the Navy.

[Telegram.]

FREDERICKSBURG, *May 19, 1864—6:30 p. m.*
(Received at Washington 6:40 p. m.)

Here all right at 2 p. m. The river is clear and patrolled.

E. HOOKER, U. S. Navy,
Commanding First Division Potomac Flotilla.

NAVY DEPARTMENT.

[Telegram.]

ST. MARY'S, *May 19, 1864.*
(Received at Washington 8:20 p. m.)

Hooker has reached Fredericksburg without injury to vessels or men. I think the river perfectly safe for transports, as it is patrolled by gunboats, and especially if the army guard the south side from Fredericksburg to Port Royal.

F. A. PARKER,
Commander.

Hon. GIDEON WELLES,
Secretary Navy.

Report of Acting Volunteer Lieutenant Hooker, U. S. Navy, commanding First Division Potomac Flotilla, of expedition up the Rappahannock River.

U. S. S. YANKEE,
Off Fredericksburg, Va., May 19, 1864.

SIR: I have the honor to report that on Monday, the 16th, in accordance with your instructions, I moved up to Union wharf, making landings at various places to obtain information. During Monday night I sent an expedition on shore, under command of Acting Master Street, which destroyed some property and brought off a quantity of bacon, which was found in a wagon.

On Tuesday morning I started two parties in boats, one on the north side of the river, under Acting Master Schulze, the other on the south side, under Acting Master Cook, to drag for torpedoes around Bowlers Rocks, and also to examine the beach for cords. As the boats approached the southern shore cavalry were seen advancing. I therefore sent the *Currituck* to protect the boats, but she unfortunately grounded, and I had to send the *Bell* to her assistance, having first sent Acting Master Street to her, his vessel being too deep draft to go, and the commanding officers of the *Bell* and *Currituck* being both away in the boats. I then advanced with the *Yankee* to the support of the boats and opened fire effectively on the cavalry. Subsequently others appeared near the *Currituck* and *Bell* when they opened fire, killing or wounding several.

The reach near Bowlers Rocks was thoroughly overhauled, and with the *Yankee* and *Fuchsia* I went to Fort Lowry. where a large company of cavalry showed themselves on the hills, but kept at a very respectful distance.

The *Currituck* did not get afloat until the next tide, and I did not send the *Bell* to you as directed, she being required to assist the *Currituck*.

At 2 o'clock a. m. Wednesday, the 18th, the *Currituck* and *Bell* reached me, bringing the order, per *Dragon*, for me to go to Fredericksburg. At daylight the *Dragon* came through the reach and we felt our way to Tappahannock. A party was here landed, under Acting Master Street, but gained nothing. From here I sent the *Dragon* back to keep open communications to the mouth of the river. The *Currituck* I kept with me so that I could use her boats with the drags. I also had a boat and crew from the *Anacostia*, which vessel was left at the mouth of the river.

Dragging all the places where we had reason to suppose torpedoes would be placed, we slowly proceeded. Landing parties were also constantly sent on shore to try and get persons and information. At

one place a white man came on board, saying he knew very nearly where the torpedoes were, and offering his services as guide in ship or boats. From thence my advance was a little more rapid, the *Fuchsia* leading and the *Currituck* next, these vessels having fenders ahead (my own broke the first day), next the *Yankee*, and last the *Bell*.

Every suspicious place was carefully dragged but no torpedoes found. By some contrabands I was informed that several had been exploded by some persons on shore, and that some had been taken up. Why this was done they did not know. Cautiously advancing in this way I reached Pratt's Point below Port Royal at 9 o'clock p. m., and anchored for the night. Through the day occasional squads of cavalry had been seen and suspicious thickets had been shelled. My landing parties had in one or two instances found places and articles which appeared to have been used for fitting torpedoes, and two or three buildings were burned.

At daylight on Thursday morning (the 19th) I sent the *Currituck* back, sending the *Anacostia's* boat and crew with her, and advanced with the *Yankee*, *Bell*, and *Fuchsia*. The reach around Pratt's Point having been carefully examined, we passed on to Port Royal. Near here the wreck of the *Satellite* was seen, burned to the water's edge. Of the *Reliance* I saw no trace, and suppose she has sunk out of sight.

From Port Royal the channel is very narrow and crooked and is bounded by high bluffs. Feeling confident that no torpedoes were in this part of the river, I pushed forward at a rapid rate. Unfortunately, near the barricade the *Fuchsia* grounded, and I had to wait for a rise of tide to get her off. At 1 o'clock p. m. we were at the barricade and our boats soon sounded a passage, through which we passed, the *Fuchsia* and *Yankee* touching parts of wrecks but receiving no damage. From this point, 6 miles, the water is very shallow and our passage was difficult; the *Yankee* and *Bell*, however, reached the wharves, off which we are anchored now. The *Fuchsia* is at anchor about a mile below, unable to come farther; in fact the *Yankee* can only move at high water. While coming through this reach the *Yankee* struck a rock with her starboard paddle, breaking out four wooden and one iron (balance) buckets. The *Fuchsia* also struck it but received no injury.

I shall send the *Bell* in the morning to stake out the channel through the obstructions.

From Occupacia Creek up we saw no signs of the enemy, although a company of cavalry, sent down from here last night for the purpose of communicating with me and delivering your dispatch of the 18th, met him in such force 15 miles below Fredericksburg that they were obliged to retire.

Very respectfully, your obedient servant,

EDWARD HOOKER,
Actg. Vol. Lieut., U. S. Navy, Comdg. First Div. Potomac Flotilla.

Commander F. A. PARKER, U. S. Navy,
Commanding Potomac Flotilla.

[Telegram.]

POINT LOOKOUT, *May 20, 1864.*

Government transports leave the mouth of the Rappahannock River for Fredericksburg at daylight. Will you see that they are properly convoyed all the way? The lower part of the river has been attended to for the first trip.

F. A. PARKER.

Captain HOOKER, U. S. Navy.

[Telegram.]

POINT LOOKOUT, *May 20, 1864.*

SIR: Your telegram received. Send *Fuchsia* to-morrow. Let her use the same precautions in descending the Rappahannock as were used in ascending. Is the *Bell* with you?

F. A. PARKER,
Commander.

E. HOOKER, U. S. Navy.

Report of Acting Master Street, U. S. Navy, commanding U. S. S. Fuchsia, of the movements of that vessel in the Rappahannock River.

U. S. S. FUCHSIA,
Rappahannock River, Virginia, May 21, 1864.

SIR: Having received orders from Captain Hooker to proceed to St. Inigoes for stores, but having [fallen] in with *Currituck* off Carter's wharf, convoying the steamers *Lizzie Baker* and *Keyport*, with barge in tow, and she having stores on board for the *Yankee*, and verbal orders to convoy the above until she fell in with a steamer bound down, and for her to convoy to Fredericksburg, I therefore deemed it proper to return to Fredericksburg with them.

I left the barricade this morning at 7 o'clock (6 miles below Fredericksburg), passed down the river 100 miles without molestation, but have every reason to believe that I shall meet with the enemy on my way up to-morrow, as they are now acquainted with our movements. I do not apprehend any trouble except from riflemen at present, but in a day or two they may have fieldpieces to dispute our passage. The enemy have their scouts on the right bank of the river to within 6 miles of Fredericksburg. I shall be out of coal in two days, but may get a supply from the transports. My engineer is very much in need of valves for his pumps. I am now lying off Fort Lowry; will start at daylight in the morning; expect to be at Fredericksburg by 6.

Hoping that my movements may meet with your approbation, I am, very respectfully, your obedient servant,

WM. TELL STREET.

[Commander] FOXHALL A. PARKER.

Report of Commander Parker, U. S. Navy, commanding Potomac Flotilla, transmitting report of Lieutenant-Commander Eastman, U. S. Navy, on torpedoes taken from the Rappahannock River.

U. S. S. KING PHILIP,
Blakistone Island, May 21, 1864.

SIR: I have the honor to forward herewith a copy of a report of Lieutenant-Commander Eastman in relation to the construction of the torpedoes lately removed from the Rappahannock River and the manner of using them as demonstrated by the explosion of one of them in the St. Mary's River on the 18th instant by my order.

Very respectfully, your obedient servant,

FOXHALL A. PARKER,
Commander, Commanding Potomac Flotilla.

Hon. GIDEON WELLES,
Secretary of the Navy.

[Enclosure.]

U. S. SCHOONER MATTHEW VASSAR, *May 18, 1864.*

SIR: In obedience to your order, I report the following experience in the use of a torpedo taken from the rebels in the Rappahannock River:

The torpedo is a cylindrical tin vessel, with a second small cylinder at the top, and with three apertures, one on the side and bottom, for the purpose of receiving the powder, which apertures are afterwards closed with a gutta-percha wad, and on the wad outside is a covering of beeswax and tallow.

The other aperture is at the top, and is for the purpose of receiving a friction primer, which is put in first, and the aperture then made water-tight by filling in with beeswax and tallow mixed.

The friction primer is attached to the end of a wire, which extends from the outside to the center of the vessel, so that the primer lies in the middle of the powder always.

To prevent the primer from having any lateral motion, three wires are soldered on to the sides of the vessel and join in the middle nearly, so that the primer may pass through their bent ends without danger of catching or moving.

The small cylinder at the top of the torpedo is covered with a tin cap so as to hold the pulling line and prevent it from being touched until the torpedo is sunk, at which time the cap is removed and the line led out to the shore.

The torpedo holds about 50 pounds of fine priming powder, and I enclose here a diagram showing dimensions, etc.

After informing myself thoroughly as to the manner of using this new weapon (by carefully opening one), I exploded another in the following manner:

Having attached a sinking weight to the two handles which are on the sides, I pulled with a small boat into the channel and then ran my line ashore, and after this was done, I carefully removed the tin cap and lowered the torpedo in 3 fathoms water.

The boat was then pulled ashore and the line pulled from about 50 yards back in the bushes, when, without any noise, a column of water 60 feet high and 5 feet in diameter was thrown up, and, covering the woods with spray, fell, sending a circular wave about 1 foot high to the surrounding shore.

The appearance was grand, and if a ship was directly over one of these torpedoes she would, in all probability, be sunk; but if alongside (except receiving a quantity of water on deck), I do not believe she would be injured.

With the information gained, I feel competent to use the remaining torpedoes against the rebels whenever it is required of me.

Respectfully,

T. H. EASTMAN,
Lieutenant-Commander, U. S. Navy.

Commander FOXHALL A. PARKER,
Commanding Potomac Flotilla.

[Subenclosure.]

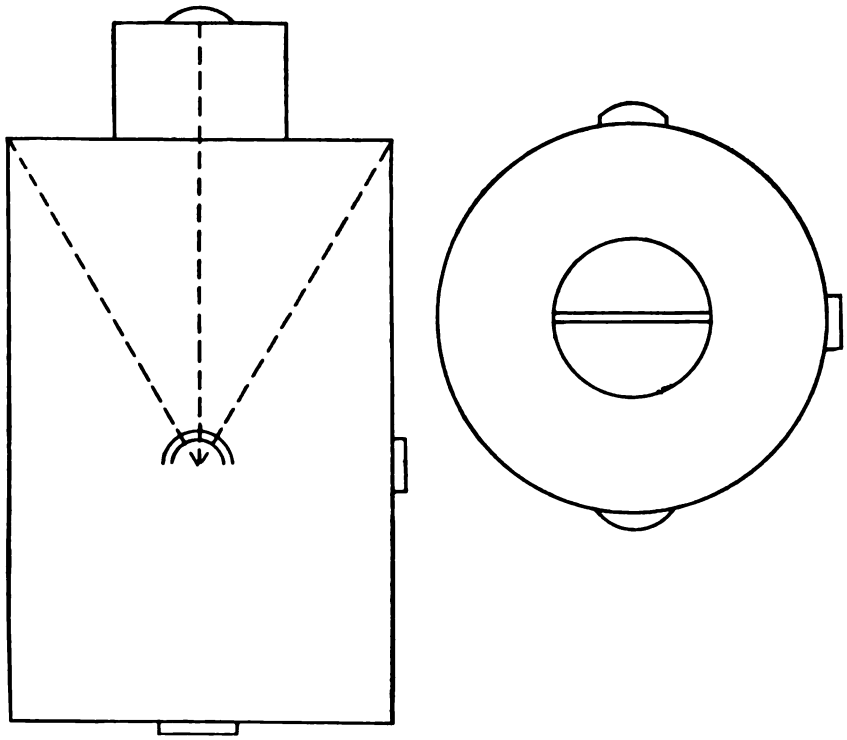

Length of case, 14 inches.
Diameter of case, 12¼ inches.
Length of cupola, 4 inches.
Diameter of cupola, 4 inches.
Length of tubes, ¾ inch.
Diameter of tubes, 1½ inches.

Report of Commander Parker, U. S. Navy, commanding Potomac Flotilla, regarding destruction of the light on Blakistone Island.

U. S. S. KING PHILIP,
St. Mary's, Md., May 21, 1864.

SIR: I have to report to the Department that on the night of the 19th instant 12 rebels, headed by a man named Goldsmith, landed in a small boat at Blakistone Island, and destroyed the lens and lamp and carried off 15 gallons of oil belonging to the light-house at that point, without doing further injury.

I have requested Colonel Draper, commanding at Point Lookout, to station a guard at Blakistone Island, at Piney Point, and on board the light-ship off Smith's Point, during the time that the vessels of the Potomac Flotilla are required for the protection of the army transports at Aquia Creek, Belle Plain, and in the Rappahannock, and for the convoying of vessels carrying prisoners of war to Fort Delaware and Point

Lookout. And I am of the opinion that while there are so many rebel sympathizers in Maryland and on the eastern shore of Virginia none of the light-houses there located are safe without a guard on shore to protect them.

I have the honor to be, your obedient servant,

FOXHALL A. PARKER,
Commander, Commanding Potomac Flotilla.

Hon. GIDEON WELLES,
Secretary of the Navy.

[Telegram.]

ST. MARY'S, MD., *May 22, 1864.*

Send along the *Fuchsia* and act according to former orders. Captain Parker is out on the river. Send me report of news every twenty-four hours.

T. H. EASTMAN,
Fleet Captain.

Captain E. HOOKER, U. S. Navy,
Fredericksburg.

[Telegram.]

FREDERICKSBURG, *May 22, 1864.*
(Received at Washington 10:25 a. m.)

Transports *Keyport* (with tow) and *L. Baker* are here all right, convoyed by *Fuchsia.*

E. HOOKER, U. S. Navy.

G. V. FOX,
Assistant Secretary Navy.

[Telegram.]

NAVY DEPARTMENT, *May 25, 1864.*

General Halleck reports that five army boats are detained at the mouth of the Rappahannock on some technical ground. Fredericksburg is to be abandoned to-morrow, therefore pass up all army boats without convoy or passes. Do not check army operations.

G. V. FOX,
Assistant Secretary.

Commander F. A. PARKER,
Commanding Potomac Flotilla, St. Mary's, Md.

[Telegram.]

ST. MARY'S, *May 25, 1864—9 p. m.*
(Received at Washington 9:10 p. m.)

The gunboats have orders to take up all transports at any time, and to convoy them all the way.

The *Fuchsia* came this morning from Rappahannock, and reports that no transports were at the mouth, but she left orders to convoy them up as soon as they wish to go.

T. H. EASTMAN,
For Commander Parker.

Hon. G. V. FOX,
Assistant Secretary Navy.

[Telegram.]

NAVY DEPARTMENT, *May 25, 1864.*

What General Halleck means is that, rather than have a moment's delay about convoy, he will take all the risk. In army movements their boats should not be delayed except for grave reasons.

G. V. FOX,
Assistant Secretary.

Commander F. A. PARKER,
Commanding Potomac Flotilla, St. Mary's, Md.

[Telegram.]

ST. MARY'S, *May 25, 1864—9:10 p. m.*
(Received at Washington 9:20 p. m.)

I have just sent a gunboat to the Rappahannock to see to the convoying of transports.

T. H. EASTMAN,
For Commander Parker.

Hon. G. V. FOX,
Assistant Secretary Navy.

[Telegram.]

NAVY DEPARTMENT, *May 25, 1864.*

The Secretary of War would like to have tug vessels at all times guarding Point Lookout while so many prisoners are there.

G. V. FOX,
Assistant Secretary.

Commander F. A. PARKER,
Commanding Potomac Flotilla, St. Mary's, Md.

[Telegram.]

ST. MARY'S, *May [25], 1864.*
(Received at Washington 10 p. m.)

Two gunboats are stationed at Point Lookout now.

T. H. EASTMAN,
For Commander Parker.

G. V. FOX,
Assistant Secretary Navy.

Report of Acting Volunteer Lieutenant Hooker, U. S. Navy, commanding First Division Potomac Flotilla, regarding disabled condition of U. S. S. Yankee.

U. S. S. YANKEE,
Off Port Royal, Va., May 25, 1864.

SIR: I regret to report that the *Yankee's* rudder is disabled. I have so far repaired it that I have been able to reach this place. I shall continue my endeavors to make my rudder work until the campaign is over, but am not very sanguine of success. I must have a new rudder.

The coal schooner I met this morning and stopped her here. We are leaving Fredericksburg as fast as possible.

The transports are passing, all under convoy.

I telegraphed you yesterday, but was informed that the line was broken up. I was also informed that the railroad was infested with guerrillas.

I have given some coal to the transports, they being all out, and shall get the schooner unloaded and off as soon as possible.

Please write and give me instructions.

Very respectfully, your obedient servant,

EDWARD HOOKER,
Actg. Vol. Lieut., U. S. Navy, Comdg. First Div. Potomac Flotilla.

Commander F. A. PARKER, U. S. Navy,
Commanding Potomac Flotilla.

Report of Commander Parker, U. S. Navy, commanding Potomac Flotilla, of the arrival at Fredericksburg, Va., of U. S. steamers Yankee, Fuchsia, and Jacob Bell.

U. S. S. ELLA,
Navy Yard, Washington, May 26, 1864.

SIR: I have the honor to report to the Department that the *Yankee*, *Fuchsia*, and *Bell* reached Fredericksburg on the 19th instant, since which time the Rappahannock River has been open for transports from its mouth.

As the gunboats were compelled to ascend the river (by my instructions) with their torpedo fenders down and to send flanking parties ashore and boats ahead (to sweep for torpedoes) in the narrow and shallow parts of it, their progress was necessarily slow, but they had the satisfaction of reaching Fredericksburg without the loss of a man; the only injury sustained being the breaking of five buckets of the *Yankee's* starboard wheel by striking a rock.

So impressed were the rebels with our operations on the 12th and 13th instant, as detailed in my report of the 16th instant, that according to the statements of refugees, they immediately thereafter, to prevent their falling into our hands, either exploded or removed all the torpedoes which they had placed in the river above Bowlers Rocks.

In Acting Volunteer Lieutenant Hooker, commanding First Division Potomac Flotilla, who conducted the advance to Fredericksburg, the Government possesses a most valuable officer.

I am, sir, very respectfully, your obedient servant,

FOXHALL A. PARKER,
Commander, Commanding Potomac Flotilla.

Hon. GIDEON WELLES,
Secretary of the Navy.

[Telegram.]

U. S. S. COMMODORE READ,
St. Mary's, May 27, 1864.

After careful enquiry, I find that not a single transport was detained by the vessels of this flotilla. Some, however, were unprovided with pilots and coal, and had their wants supplied by the *Yankee*. The *Primrose* is guarding the telegraph cable, the *Teaser* cruising in upper Potomac, *Pelig* in lower, *Freeborn* and *Bacon* at Point Lookout, *Matthew*

Vassar at this depot. The rest of the flotilla, guard vessels *Sophronia* and *Hugel* excepted, are in the Rappahannock, whither I am about going in this vessel.

F. A. PARKER,
Commander, Commanding Potomac Flotilla.

Hon. G. V. FOX,
Assistant Secretary of Navy.

[Telegram.]

NAVY DEPARTMENT, *May 28, 1864.*

Let a gunboat watch the cable across the Potomac now that the troops for its protection are withdrawn.

G. V. FOX,
Assistant Secretary.

Commander F. A. PARKER,
Commanding Potomac Flotilla, St. Mary's, Md.

[Telegram.]

PORT ROYAL, VA., *May 29, 1864.*
(Received at Washington 5:15 p. m.)

The *Primrose* guards the cable and the *Teaser* near to her.

F. A. PARKER,
Commanding Potomac Flotilla.

Hon. G. V. FOX.

Order of Commander Parker, U. S. Navy, commanding Potomac Flotilla, to Acting Master Street, U. S. Navy, commanding U. S. S. Fuchsia, to proceed to Port Royal, Va.

U. S. S. COMMODORE READ, *May 29, 1864.*

SIR: You will, at early daylight, proceed to Port Royal [Va.], and report to Acting Volunteer Lieutenant E. Hooker and give him the dispatch accompanying this order.

When you have towed the *Yankee* as far as Captain Hooker desires, you will return up the river until you meet the flagship.

You will be careful to shell all suspicious places, as the rebels are reported to be on both sides of the river.

Respectfully,

FOXHALL A. PARKER,
Commander, Commanding Potomac Flotilla.

Acting Master W. T. STREET,
Commanding U. S. S. Fuchsia.

[Enclosure.]

U. S. S. COMMODORE READ, *May 29, 1864.*

SIR: You will proceed down the river in tow of the *Fuchsia* until you reach the vicinity of Circus Point, where you will receive from the *Freeborn* the *Eureka's* launch, etc.

You will give Captain Arthur the enclosed order and then work your way down to the mouth of the river; communicate with the *Currituck* and give Captain Cook the enclosed order.

You will, until further orders, cruise off the mouth of the river, taking advantage of the first opportunity to send the *Eureka's* launch, etc., to St. Inigoes, and if your rudder can not be made to work, order the *Resolute* to tow you to the depot for repairs.

Should you meet the *Cœur de Lion* near the mouth of the Rappahannock, and she should need a Rappahannock pilot, please exchange with him.

Respectfully,

FOXHALL A. PARKER.
Commander, Commanding Potomac Flotilla.

Acting Volunteer Lieutenant E. HOOKER,
Commanding U. S. S. Yankee.

[Telegram.]

PORT ROYAL, VA., *May 30, 1864.*
(Received at Washington, 9 a. m., May 31.

Port Royal has been evacuated by the Army. I am about moving down the river with General Abercrombie, protecting the rear of and convoying the transports.

F. A. PARKER,
Commanding Potomac Flotilla.

Hon. G. WELLES.

Order of the Secretary of the Navy to Commander Parker, U. S. Navy, commanding Potomac Flotilla, transmitting extract from commissary-general of prisoners, Point Lookout, Md.

NAVY DEPARTMENT, *May 31, 1864.*

SIR: I herewith transmit a copy of an extract of a letter of the 20th instant, addressed to the Secretary of War by the commissary-general of prisoners, relative to stationing a steam gunboat at Point Lookout, Md., for the protection of the depot and the security of the prisoners held at that place.

You will take such measures to secure the object in view as you may deem expedient.

Very respectfully,

GIDEON WELLES,
Secretary of the Navy.

Commander F. A. PARKER,
Commanding Potomac Flotilla, Washington, D. C.

[Enclosure.—Extract.]

OFFICE OF COMMISSARY-GENERAL OF PRISONERS,
Point Lookout, Md., May 20, 1864.

* * * * * * *

There are two gunboats lying off the depot, one a sailing vessel, but I am informed by the commanding officer that he is frequently left with the sailing vessel alone, which makes him comparatively helpless in unfavorable wind or a calm and exposes him to capture by an unexpected attack. I would therefore respectfully recommend that application be made to the Navy Department for a steam gunboat, to be stationed

permanently at the depot, to guard against a descent of the enemy from the Virginia shore and to overawe the prisoners. The two vessels should, if possible, be generally present, but if one is detached it should be the sailing vessel.

* * * * * * *

W. HOFFMAN,
Colonel Third Infantry, Commissary-General Prisoners.

Hon. E. M. STANTON,
Secretary of War.

Report of Commander Parker, U. S. Navy, commanding Potomac Flotilla, transmitting report of destruction of wreck of U. S. S. Satellite.

U. S. S. COMMODORE READ,
Port Royal, Va., May 31, 1864.

SIR: I have the honor to enclose herewith a copy of a report just received from Lieutenant-Commander Eastman.

I am, sir, very respectfully, your obedient servant,

FOXHALL A. PARKER,
Commander, Commanding Potomac Flotilla.

Hon. GIDEON WELLES,
Secretary of the Navy, Washington, D. C.

[Enclosure.]

U. S. S. COMMODORE READ,
Port Royal, Va., May 31, 1864.

SIR: In obedience to your order, I examined the wreck of the U. S. S. *Satellite*, and report her as entirely destroyed, except her boiler, which was in good condition, and it was evident, from its position on the side of the vessel, that the rebels had been at work getting it ashore, and were prevented from succeeding by your advance division of gunboats.

As it was not practicable to bring it away, I placed in it one of the torpedoes captured from the rebels (containing 50 pounds of powder) and exploded it successfully, tearing the boiler into strips and breaking up what remained of the wreck.

I also brought off 60 fathoms of a heavy iron cable and an anchor weighing 1,000 pounds, which I think the rebels intended to stretch across the channel, as one end of the cable was fast to a heavy spike near the shore.

Respectfully,

T. H. EASTMAN,
Lieutenant-Commander.

Commander FOXHALL A. PARKER,
Commanding Potomac Flotilla.

Report of Acting Volunteer Lieutenant Hooker, U. S. Navy, commanding First Division Potomac Flotilla, regarding movements of the enemy in Virginia.

U. S. S. COMMODORE READ, *May 31, 1864.*

The enemy's cavalry are in heavy force near Fredericksburg; one report says in Fredericksburg. The *Bell* and two transports are not yet returned from there. The troops are marching down.

Mosby is between the Rappahannock and Potomac, endeavoring to cut the telegraph. A large force of cavalry, said to be commanded by a general, is on the north side of the Rappahannock below here and another on the south side. We lost fifteen wagons from a train within 4 miles of Port Royal [Va.] last night.

It is said that they are throwing up a battery on the north side of the river below here, but I do not know where.

The trains are nearly all gone from here, and everything will be away in two days.

I have a large copper torpedo. General Abercrombie wishes to see the fuse, so I will retain it till I see the commander.

The above information comes from General Abercrombie.

Twenty thousand dollars' worth of furniture, etc., were destroyed at the residence of Major [T. P.] Turner, of Libby Prison, by soldiers who have been under him as prisoners and were just exchanged.

If the *Bell* does not come down by morning, I shall send the *Burnside*.

As I have but little time, I respectfully ask that the verbal report of Acting Master Street, based on these minutes, be received as a synopsis of my report, etc.

Very respectfully,

E. HOOKER,
Actg. Vol. Lieut., U. S. Navy, Comdg. First Div. Potomac Flotilla.

Commander F. A. PARKER,
Commanding Potomac Flotilla.

Report of Commander Parker, commanding Potomac Flotilla, regarding contraband refugees.

U. S. S. COMMODORE READ,
St. Mary's River, June 2, 1864.

SIR: I have the honor to inform the Department, that in the Rappahannock 116 contrabands (men, women, and children) took refuge on board the vessels of this flotilla, who were landed at Point Lookout, Md.

I am, sir, very respectfully, your obedient servant,

FOXHALL A. PARKER,
Commander, Commanding Potomac Flotilla.

Hon. GIDEON WELLES,
Secretary of the Navy.

[Telegram.]

HEADQUARTERS POTOMAC FLOTILLA,
St. Mary's, June 2, 1864.
(Received at Washington 6 a. m.)

I have just arrived from Port Royal, which was evacuated last evening. All the transports reached the mouth of the Rappahannock in safety.

FOXHALL A. PARKER,
Commander, Commanding Potomac Flotilla.

Hon. GIDEON WELLES,
Secretary Navy.

Order of Commander Parker, U. S. Navy, commanding Potomac Flotilla, to Acting Volunteer Lieutenant Hooker, U. S. Navy, commanding First Division, regarding vessels of his command.

U. S. SCHOONER MATTHEW VASSAR, *June 2, 1864.*

SIR: The First Division will be composed of the following-named vessels:

1. Commodore Read.
2. Freeborn.
3. Bell.
4. Fuchsia.
5. Currituck.
6. Anacostia.

They will have the following stations:

Commodore Read.—Mouth of Rappahannock River.
Freeborn.—Mouth of Piankatank.
Bell.—Mouth of Wicomico.
Fuchsia.—Mouth of Piankatank.
Currituck.—Point Lookout, Smith's Point.
Anacostia.—Point Lookout, Smith's Point.

Respectfully,

FOXHALL A. PARKER,
Commander, Commanding Potomac Flotilla.

Acting Volunteer Lieutenant E. HOOKER,
Commanding First Division Potomac Flotilla.

Report of Commander Parker, U. S. Navy, commanding Potomac Flotilla, transmitting report regarding disposition of furniture from abandoned plantation.

U. S. S. ELLA,
Potomac Flotilla, June 9, 1864.

SIR: I have the honor to enclose herewith a copy of a letter from Acting Master Commanding W. T. Street.

I would respectfully ask instructions regarding the piano.

I am, sir, very respectfully, your obedient servant,

FOXHALL A. PARKER,
Commander, Commanding Potomac Flotilla.

Hon. GIDEON WELLES,
Secretary of the Navy.

[Endorsement.]

It is to be regretted that the piano is taken. Now better be turned over for confiscation, or to be retained by proper authority for proper disposition hereafter.

W[ELLES].

[Enclosure.]

U. S. S. FUCHSIA,
Rappahannock River, Virginia, May 24, 1864.

SIR: While on my way down the river I had occasion to anchor for the night near the plantation of Mr. Taylor, about 12 miles below Fredericksburg.

On landing with a small force, I learned that the place had been abandoned for the last year, and the owner serving in the Army of the enemy; also that our soldiers had been at the place during the day and destroyed a great quantity of forage and household furniture.

In the house was a piano, and feeling assured that it would, together with the other articles, be destroyed, I gave orders to have it taken on board.

I am, very respectfully, your obedient servant,

WM. TELL STREET,
Acting Master, Commanding.

Acting Volunteer Lieutenant EDWARD HOOKER, U. S. Navy,
Commanding First Division Potomac Flotilla.

Report of Commander Parker, U. S. Navy, commanding Potomac Flotilla, regarding disposition of furniture from abandoned plantation.

U. S. S. ELLA,
Potomac Flotilla, June 19, 1864.

SIR: Agreeably to your order of the 16th instant I have directed Acting Master Street to turn over the piano taken from the plantation of Mr. Taylor to the proper agent of the Treasury Department for receiving all abandoned property in the insurrectionary districts.

I believe Acting Master Street took the piano from the best motives, but I have ordered that in future no furniture be taken from private houses under any circumstances.

I have the honor to be, very respectfully, your obedient servant,

FOXHALL A. PARKER,
Commander, Commanding Potomac Flotilla.

Hon. GIDEON WELLES,
Secretary of the Navy.

Combined army and navy expedition to Northern Neck of Virginia, June 11–21, 1864.

[Telegram.]

ST. INIGOES, *June 11, 1864.*

Captain Street comes down in the *Read* to take command of the naval landing party, and has orders from the commander to work with you as your combined judgment dictates. Captain [W. H.?] Smith commands this naval force afloat in the expedition, and I think the commodore's arrangements complete. May you have every success.

T. H. EASTMAN,
Fleet Captain.

Colonel DRAPER.

Order of Lieutenant-Commander Eastman, U. S. Navy, fleet captain, to Acting Master Street, U. S. Navy, commanding U. S. S. Fuchsia.

[JUNE 11, 1864.]

You will be ready to move by sundown with a company of men, as follows: *Fuchsia*, 20 men, 1 officer; *Anacostia*, 30 men, 1 officer; *Read*, 20 men, 1 officer; *Sophronia*, 30 men, 1 officer. All to have three days' rations cooked, 50 rounds of ammunition.

THOMAS H. EASTMAN.

Captain STREET.

Order of Acting Master Street, U. S. Navy, commanding U. S. S. Fuchsia, to Acting Ensign Mitchell, U. S. Navy, executive officer.

U. S. S. FUCHSIA,
Potomac Flotilla, June 11, 1864.

SIR: You will have ready to move at sundown 20 men from this vessel with three days' cooked provisions and 50 rounds of cartridges; these men to be equipped for shore duty.

Respectfully,

WM. TELL STREET,
Acting Master, Commanding.

Acting Ensign G. B. MITCHELL,
Executive Officer.

[Telegram.]

Use your judgment; burn grain and other things you think proper; take boats, etc., nets, seines, etc. I see lots of canoes below us. I think we had better clean them all out.

Be as expeditious as possible.

He darkies, bring off, etc. You know what to do. Again, use your own judgment.

Do you want the launch?

HOOKER.

Captain STREET.

Report of Acting Master Street, U. S. Navy, commanding U. S. S. Fuchsia.

U. S. S. FUCHSIA,
Potomac Flotilla, June 15, 1864.

SIR: I respectfully beg leave to make the following report of my movements on the expedition to Virginia:

On the morning of the 12th instant 500 soldiers, 50 cavalrymen, and 100 sailors were landed at Pope's Creek, Virginia (Northumberland County), the former under the command of Colonel A. G. Draper, the latter under my own command. Landing in safety, we proceeded out to the main road, where a force consisting of 150 soldiers and 12 cavalry were detached, with orders to proceed to Smith's wharf, on the Rappahannock, and thence down the Rappahannock side of the neck to Warsaw, while the main body moved down the road via Northumberland Court-House (Montross), and were to form a junction with the former detachment at Warsaw. When we were about 4 miles from Montross a second detachment was sent to Nomini Bay, to communicate with Captain [W. H.?] Smith, and inform him that the vessels would be communicated with at Machodoc Creek on the following day, and that all the horses, cattle, etc., would be taken off at that point. Three of our advance cavalry, on riding into Montross, were fired upon (by men supposed to belong to Goldsmith's party), but knowing that a force was coming up, they took to the woods and made good their escape. Remaining here a short time, we proceeded to the crossroads leading to Warsaw, where at dark we encamped for the night and to wait for the second detachment to come up. Having taken a number of cattle, horses, farming implements, etc., up to this point, and as I knew the road to and place of embarking at Machodoc, it was thought best that I

should take a sufficient force (50 sailors and 9 cavalry) and proceed to that point with our captures, while Colonel Draper, with the main force, took the crossroad to Warsaw. Accordingly I sent Acting Ensign Nelson, in command of 50 sailors, to accompany Colonel Draper, it being understood between the colonel and myself that we would join our forces on the following day at the junction of the two main roads farther east. I arrived and communicated with our vessels at Machodoc Creek at 9:30 p. m., where I encamped for the night. On the morning of the 14th Colonel Draper, with a small cavalry force, rode over from Warsaw, and stated that he had communicated with our vessels on the Rappahannock, and proposed to take everything on board the vessels and move around to Union wharf, where he would join us with his force. This proposition met with the approval of Captain Hooker and myself, from the fact that we could join him in a much shorter time than by marching across the land. It was found however, after coming to this conclusion, that the *Commodore Read* had not sufficient coal on board to proceed.

The result of the expedition thus far has been as follows: One hundred and fifty head of cattle, 33 head of horses, 20 sheep, a large quantity of farming implements, 8 prisoners, one of them Mr. Seeley, formerly of the U. S. Navy, and 50 contrabands. All the above were taken to Point Lookout in transports. I am pleased to add that the sailors behaved better on this than [on] any former occasion, and have become quite efficient on shore duty.

I am, sir, your obedient servant,

WM. TELL STREET,
Acting Master, Commanding.

Commander FOXHALL A. PARKER,
Commanding Potomac Flotilla.

Report of Acting Volunteer Lieutenant Hooker, U. S. Navy, commanding First Division Potomac Flotilla, of attack by the enemy.

U. S. S. COMMODORE READ,
Off Union Wharf, Rappahannock River, Virginia, June 17, 1864.

SIR: I send the *Bell* for coal, and shall be pleased to have her return as quickly as possible, as the *Freeborn* will be out in two or three days. The *Fuchsia* has not yet arrived.

We arrived yesterday at noon, and I at once embarked the sailors which were on shore. In the afternoon the enemy attacked our troops with a small body of cavalry. From the persistence with which they held their ground, I concluded they had strong reenforcements near, and expected a night attack, but the night I believe has passed with only some sharp skirmishing. I have not, however, communicated with shore this morning.

The cattle collected are nearly all embarked, and it is proposed to embark the troops and land them again near Tappahannock. Captain Street will, from his intimate knowledge of the country, render valuable service on his arrival.

I shall leave one vessel to guard the channel at Bowlers Rocks.

Very respectfully, your obedient servant,

EDWARD HOOKER,
Actg. Vol. Lieut., U. S. Navy, Comdg. First Div. Potomac Flotilla.

Commander F. A. PARKER, U. S. Navy,
Commanding Potomac Flotilla.

Report of Acting Volunteer Lieutenant Hooker, U. S. Navy, commanding First Division Potomac Flotilla, of renewed attack by the enemy.

U. S. S. COMMODORE READ,
Off Union Wharf, Rappahannock River, Virginia,
June 17, 1864—3 p. m.

SIR: The enemy, 300 strong, and with a reserve, numbers unknown, renewed the attack this morning at 7 o'clock. The fighting was but little more than a sharp skirmishing in the woods with 150 men on our side, but lasted until 1 o'clock p. m., when the enemy fell back with considerable loss; how much I do not know. They are now rallying at Farnham Church and fortifying.

We propose to embark all our troops this evening, and land on the other side of the river, near Occupacia Creek, at daylight to-morrow. There are said to be about 500 men there. I think, however, that some of them have crossed and are in the force opposed to us to-day. By this move we hope to surprise and rout those on the south side of the river, and thus throwing those on the upper side off their guard, to be enabled to come back and whip them too. It will be a very great assistance if we can have one or two howitzers to help us along, and if you send them I shall be much pleased, as will also Colonel Draper, who makes special request for them. I would like one or two more vessels also to keep the river open below us.

Very respectfully, your obedient servant,

EDWARD HOOKER.

Commander F. A. PARKER, U. S. Navy,
Commanding Potomac Flotilla.

Letter from Lieutenant-Commander Eastman, U. S. Navy, fleet captain, to Acting Volunteer Lieutenant Hooker, U. S. Navy, commanding First Division.

U. S. S. ELLA, *June 18, 1864.*

SIR: The *Fuchsia* will come with an order from the commander. He orders that no sailors be landed, and that you cover and protect the army, but as the commander's intentions and wishes have not been carried out, he will not have any confused work. The *Freeborn* is to be sent here for coal, as the commander considers that the *Read*, *Fuchsia*, and *Bell* are able to clear the river at any time.

Respectfully,

T. H. EASTMAN,
Fleet Captain.

Acting Volunteer Lieutenant E. HOOKER,
U. S. S. Read.

Instructions from Commander Parker, U. S. Navy, commanding Potomac Flotilla, to Acting Volunteer Lieutenant Hooker, U. S. Navy, commanding First Division, regarding assistance to be rendered to the Army from the river.

U. S. S. ELLA,
St. Mary's, Md., June 18, 1864.

SIR: I have just received yours of the 17th instant. When the present expedition was in contemplation I proposed sending two howitzers and 100 seamen from the flotilla to accompany Colonel Draper on shore.

He, however, thought the howitzers would impede his movements, and I therefore, greatly against my own judgment, sent the men without the pieces. This force Colonel Draper thought it proper to divide, sending a portion of it across the country from the Potomac to the Rappahannock, and advising that "the rest be sent around by water," by which division the naval commander whom I had selected was left on board the *Commodore Read*, while an officer in whom I had just expressed a want of confidence remained in command of the shore party. I can not now permit either seamen or howitzers to be landed on either bank of the Rappahannock, to engage in enterprises of which I know not the nature. You will therefore, immediately upon the receipt of this, notify Colonel Draper that you are ready with the gunboats under your command to render him all the assistance possible from the river, but that the land force must consist of soldiers alone. He can certainly get reenforcements from Point Lookout should he need them, as I have three gunboats stationed there at this time.

I am, respectfully, yours,

FOXHALL A. PARKER,
Commander, Commanding Potomac Flotilla.

Acting Volunteer Lieutenant EDWARD HOOKER,
Commanding First Division Potomac Flotilla.

Report of Acting Volunteer Lieutenant Hooker, U. S. Navy, commanding First Division Potomac Flotilla, of engagements with the enemy at Union wharf, Layton's wharf, and Tappahannock, Va.

U. S. S. COMMODORE READ,
Off Tappahannock, Rappahannock River, June 21, 1864.

SIR: I send the *Freeborn* for coal, and on her return shall come up myself.

My last communication was up to 3 o'clock p. m. Friday (17th). At about 6 o'clock p. m. of that day the enemy were found to be in position about three-fourths of a mile from Union wharf, and were no doubt meditating a night attack. I at once opened upon them from this ship, and soon the cloud of dust moving along the road showed that they had been dislodged. Guided by the dust I continued shelling them until they were out of range. As soon as it was dark we commenced embarking the troops, and had nearly accomplished it when the enemy's cavalry made a dash at the wharf, but my crew being still at quarters, they were promptly met by a broadside from this ship and skedaddled in confusion.

At 2 o'clock a. m. Saturday, we were underway and steaming up the river to Layton's wharf, about 18 miles above Tappahannock, where we landed the troops. I also made an impromptu fieldpiece by lashing a boat carriage upon a cart axletree and mounting a howitzer upon it; with this gun I sent twenty sailors. At this place we learned that two regiments of infantry which had been foraging in that region had crossed the day before and gone to Union wharf, arriving there probably about the time at which we left. Thus, finding the country open to us, we at once went to work intending to embark all the cattle which could be got near here at this wharf, and then with my ships and the transports I would drop down to Tappahannock while the troops marched down. Just before night, however, our troops were driven back by a detachment from Hampton's Legion. The legion, it was

reported, was 10,000 strong, and was driving Sheridan before it. At about sunset the detachment which was driving our men came within range of the *Read's* guns and received such greeting that they soon left. Finding the land route to Tappahannock cut off, we at once set about embarking the troops, and at 3 o'clock Sunday had everything afloat, and at 4 o'clock were underway. At 7 o'clock we arrived off Tappahannock and after reconnoitering landed the troops. At this place the *Bell* and *Fuchsia* joined us, bringing your letter in reply to mine of Friday.

Two of the transports being full of cattle, horses, etc., they were dispatched to Point Lookout and the *Fuchsia* sent to Bowlers Rocks. The *Bell* I anchored below the town and the *Freeborn* above, while with the *Read* I took position in front of the town. At about 3 o'clock p. m. our pickets were driven in by the enemy's cavalry, but they in turn were soon routed by the guns of the *Bell*.

We have been at work all night embarking horses, cattle, etc., and the transports are so loaded that I am obliged to take the troops on board the gunboats. The transports which left yesterday will probably be back before noon and relieve our decks.

This (Tappahannock) will probably be the last point of operation. The raid has been a success. Between 400 and 500 head of cattle, nearly 200 horses, as many sheep, and several hundred contrabands have been obtained, besides a steamer load of farming utensils to go to the "contraband farm."

I will make a report covering all the movements soon, but feel much more inclined to sleep than work at present. Officers and men have worked day and night and done their duty faithfully and promptly.

Very respectfully, your obedient servant,

EDWARD HOOKER,
Actg. Vol. Lieut., U. S. Navy, Comdg. First Div. Potomac Flotilla.

Commander F. A. PARKER, U. S. Navy,
Commanding Potomac Flotilla.

Detailed report of Acting Volunteer Lieutenant Hooker, U. S. Navy, commanding First Division Potomac Flotilla.

U. S. S. COMMODORE READ,
Rappahannock River, Virginia, June 21, 1864.

SIR: I have the honor to report that I joined this ship on the morning of Sunday, June 12, at Pope's Creek, at which place the expedition with which she was cooperating was then landing. At 11 o'clock a. m. the whole force, consisting of 500 troops (cavalry and infantry) under Colonel Draper, and 100 sailors, under Acting Master Street, took up their line of march.

The gunboats *Teaser* and *Resolute* then proceeded to their stations, while with the *Eureka* I remained to assist one of the transports which was aground. At 6 p. m., the transport being afloat, I proceeded with the *Eureka* and four transports in company to Nomini Creek, where at 10 o'clock p. m. I communicated with a detachment of our troops which had arrived with a drove of cattle. In attempting to get the transport *Favorite* to the wharf she grounded and was not got afloat until nearly daylight. I therefore dispatched the *Eureka* with the remaining transports to Machodoc Creek, which was to be the next place of rendezvous, and at which place they would find the *Teaser* stationed.

At noon (Monday, 13th), having embarked all the cattle, I proceeded to Machodoc Creek and sent the *Eureka* with two boats from this ship up the creek to communicate with the land forces. At sunset she returned with the information that Acting Master Street, with a detachment of soldiers and sailors, was bringing down a large number of cattle and horses, etc., and at about midnight he arrived. Tuesday (14th) and Wednesday (15th) were employed in embarking cattle on the transports and in examining the various estates about Machodoc.

Beardsley, a seaman from the *Anacostia*, was mortally wounded while here by the accidental discharge of his gun.

At sunset on Wednesday, everything being embarked, including the troops which were at this point, and which were embarked for transportation to the Rappahannock, which was to be the future place of operations, the fleet got underway and the transports proceeded to Point Lookout to discharge their cargoes of cattle, while this ship, with the *Eureka* in tow, went to St. Inigoes for coal.

At St. Inigoes Acting Master Street returned to his own ship (the *Fuchsia*) and the sailors were returned to their respective vessels. At 1 o'clock a. m. (Thursday, 16th), having finished coaling, I left for the Rappahannock, stopping at Point Lookout to put Captain [W. H.] Smith on board his vessel (the *Tulip*) and to take in charge the transports at this place. I also landed a number of contrabands which I had brought from Machodoc.

At 4 a. m. I left Point Lookout and proceeded direct to Union wharf, Rappahannock River, arriving at noon. At this place we found the gunboats *Freeborn* and *Jacob Bell*. The troops were also on shore with a large number of cattle, which were at once transferred to the transports, the wharf being rebuilt for that purpose. The sailors on shore were also taken on board this ship, they being very footsore, etc. During the afternoon our force was attacked by a small body of cavalry and sharp skirmishing continued through the afternoon and the early part of the night, the enemy constantly receiving reenforcements. At about 7 o'clock a. m. (Friday) they renewed the attack with 150 cavalry and 150 infantry, under the command of [Lieutenant] Colonel Meriwether Lewis, having also a large reserve under Goldsmith. One hundred and fifty of our men were at once thrown into the woods and kept up a sharp skirmishing until about 1 o'clock p. m., when the enemy retired to Farnham Church, on the Heathsville road, and commenced throwing up breastworks under the supposition no doubt that we were going to Heathsville. At about 6 o'clock p. m. we found that the enemy were rallying again at Pierson's Corner, the place where the fighting had been. I at once opened upon them from this ship and soon dislodged them, and guided by the dust shelled them until out of range. The troops were now embarking, and when they were nearly all off a dash was made at them by the enemy's cavalry, but a few shells from this ship dispersed them.

From this place two steamers loaded with cattle and horses were sent to Point Lookout. The *Jacob Bell* was also sent for coal.

At 2 o'clock a. m. the fleet was again underway and steaming up the river, and at 6.30 a. m. (Saturday) we arrived at Layton's wharf, about 18 miles above Tappahannock. We here learned that two regiments of infantry had crossed the river from this place the day before and marched down to Union wharf, expecting to meet us there.

We here found a wharf which required but little repairs, and on it we soon landed the troops. I also got up an impromptu fieldpiece by

lashing a boat carriage upon a cart axletree and mounting a howitzer upon it. With this gun I sent twenty sailors. The plan arranged was that horses, cattle, etc., collected should be sent to this wharf and be put on board the transports, and the troops should be marched to Tappahannock, but in the afternoon we were attacked by a considerable force of cavalry, which was reported to belong to Hampton's Legion, said to be only a few miles off.

The transport being loaded with cattle, it became necessary to take the troops, cavalry horses, and all on board the gunboats. At 3 o'clock a. m. Sunday everything was embarked, and at 4 o'clock a. m. we started for Tappahannock. At this place the *Fuchsia*, *Bell*, and two transports joined us. The two loaded boats were at once sent to Point Lookout, the troops were landed, and before night one transport was filled with horses and cattle. During the afternoon a cavalry dash was made at us but was soon dispersed by the guns of the *Jacob Bell*. By midnight the transports were all loaded again and it became necessary for us to again embark the troops on board the naval vessels, which was accomplished by 5 o'clock a. m. Monday, and at 6 o'clock we moved down the river. At Union wharf we found that the enemy had burned the wharf which we had repaired.

At sunset we reached the mouth of the river and met the transports which had been sent to the point. Here Colonel Draper left me, and with the loaded transports went to Point Lookout, while I at once went to work to transfer the soldiers, horses, etc., from the gunboats to the remaining transports, at the same time receiving from them a few tons of coal to help out our necessities. The transfers were accomplished by 3 o'clock a. m. Tuesday and the transports left for Point Lookout, thus closing the expedition which had lasted from Saturday, June 11, to Tuesday, June 21.

Of the results of the expedition in horses, cattle, contrabands, etc., I am unable to give a reliable estimate. In casualties we have lost from the Army 2 killed and 2 prisoners; from the Navy, 1 seriously (probably mortally) wounded, 1 missing, and 2 or 3 very slight wounds.

The loss of the enemy in killed and wounded we have no means of ascertaining, as they were always in superior force and carried their casualties away with them. Two, however, we know of, mortally wounded and 15 prisoners are in our hands.

Very respectfully, your obedient servant,

EDWARD HOOKER,
Actg. Vol. Lieut., U. S. Navy, Comdg. First Div. Potomac Flotilla.

Commander F. A. PARKER, U. S. Navy,
Commanding Potomac Flotilla.

Report of Commander Parker, U. S. Navy, commanding Potomac Flotilla, transmitting letter from Colonel Draper, U. S. Army, regarding cooperation of the flotilla with the forces under his command.

U. S. S. ELLA,
Potomac Flotilla, June 29, 1864.

SIR: I have the honor to enclose to the Department a copy of a letter just received from Colonel A. G. Draper in reference to the cooperation of the flotilla with the forces under his command in their late expedition to the northern neck of Virginia and to the south side of the Rappahannock, in the vicinity of Tappahannock.

Acting Volunteer Lieutenant Hooker is the senior officer present spoken of by Colonel Draper.

I am, sir, very respectfully, your obedient servant,

FOXHALL A. PARKER,
Commander, Commanding Potomac Flotilla.

Hon. GIDEON WELLES,
Secretary of the Navy.

[Enclosures.]

HEADQUARTERS ST. MARY'S DISTRICT,
Point Lookout, Md., June 22, 1864.

SIR: I have the honor to acknowledge the signal services rendered by the flotilla under your command in the recent expedition to Virginia by the combined naval and army forces, the army portion of which was under my command.

The very important assistance rendered by the flotilla, and the cheerful cooperation of all the officers of the different vessels, require more than an ordinary acknowledgment from me, for, not content with performing the usual service of naval vessels in similar circumstances, they allowed their gunboats to be used for the transportation of captured property which could not be put upon the transports, thereby subjecting themselves to great inconvenience and annoyance. Denying themselves needful rest and sleep, they labored night and day, assisting in the embarkation of captured property and aiding the Army in every possible way.

It would be impossible to overestimate the valuable assistance rendered by the gunboats in covering our different landings, and in shelling the enemy, who frequently threatened to attack the land forces during the difficult operation of embarking.

My thanks are especially due to the senior naval officer present for his courtesy, thoughtfulness, and constant cooperation.

Accept, sir, the assurance of my profound regard, and permit me to remain, with much respect, your obedient servant,

ALONZO G. DRAPER,
Colonel Thirty-sixth U. S. Colored Troops, Commanding District.

Commander FOXHALL A. PARKER,
Commanding Potomac Flotilla.

Report of Commander Parker, U. S. Navy, commanding Potomac Flotilla, giving list of prizes of war, received from Colonel Draper, U. S. Army.

U. S. S. ELLA,
Potomac Flotilla, July 6, 1864.

SIR: I have the honor to report to the Department that I have sent to the prize court at this place (Washington, D. C.) the following articles, viz, 9 boats, 6 wagons, 3 horses, 3 boxes of tobacco, 14 bags of wool, delivered over to me by Colonel Draper, U. S. Army, as prizes of war in his recent expedition to the northern neck of Virginia, when a party of fifty seamen accompanied him.

I am, sir, very respectfully, your obedient servant,

FOXHALL A. PARKER,
Commander, Commanding Potomac Flotilla.

Hon. GIDEON WELLES,
Secretary of the Navy.

Letter from Lieutenant-Commander Eastman, U. S. Navy, fleet captain, to Acting Volunteer Lieutenant Hooker, U. S. Navy, commanding First Division, regarding depredations committed during the Draper raid.

U. S. S. ELLA, *August 5, 1864.*

SIR: You will endeavor to ascertain the particulars with regard to the entering of houses during the last raid under Colonel Draper and yourself.

The commander desires to know if any sailors or officers behaved improperly toward unarmed or unprotected women, or if anything was stolen from women by your men.

Respectfully,

T. H. EASTMAN,
Fleet Captain.

Acting Volunteer Lieutenant E. HOOKER,
Commanding U. S. S. Commodore Read.

Report of Acting Volunteer Lieutenant Hooker, U. S. Navy, commanding First Division Potomac Flotilla, regarding depredations committed during the Draper raid.

U. S. S. COMMODORE READ,
Off Rappahannock River, Virginia, September 1, 1864.

SIR: I have, so far as I have been able, made enquiries regarding the improper entering of houses and depredations by the sailors during the Draper raid, and I am unable to learn that any improprieties were committed by our sailors, nor do I think that they were guilty of any such conduct. I am aware that such things were done by the negro soldiers, and some of them were severely punished by Colonel Draper for it. The sailors, however, I believe to be guiltless.

Very respectfully, your obedient servant,

EDWARD HOOKER,
Actg. Vol. Lieut, U. S. Navy, Comdg. First Div. Potomac Flotilla.

Commander F. A. PARKER,
U. S. Flag-Steamer Don, Commanding Potomac Flotilla.

[Telegram.]

NAVY DEPARTMENT, *June 20, 1864.*

The *Baltimore* leaves Washington at 4 p. m. to-day. Let a fast gunboat accompany her from the mouth of the Potomac to Old Point and return with her. Commander Parker will go if he is at St. Mary's.

G. V. FOX,
Assistant Secretary of the Navy.

Commander F. A. PARKER,
St. Mary's.

[Telegram.]

NAVY DEPARTMENT, *June 22, 1864.*

Have suitable convoy ready to go from Point Lookout with prisoners to Fort Delaware to-morrow afternoon.

GIDEON WELLES,
Secretary of the Navy.

Commander F. A. PARKER, or
Lieutenant-Commander T. H. EASTMAN,
Navy Yard, Washington, D. C.

[Telegram.]

NAVY YARD, WASHINGTON, *June 22, 1864.*
(Received at 3:17 p. m.)

The *Commodore Read* will be ready to-morrow afternoon to convoy prisoners.

T. H. EASTMAN.

GIDEON WELLES,
Secretary Navy.

Capture of guerrillas, June 23, 1864.

Report of Commander Parker, U. S. Navy, commanding Potomac Flotilla, of the capture of guerrillas at the mouth of Rappahannock River.

U. S. S. ELLA,
Potomac Flotilla, June 29, 1864.

SIR: I have the honor to inform the Department that an expedition sent on shore near the mouth of the Rappahannock on the 23d instant by Acting Volunteer Lieutenant Hooker succeeded in capturing the following guerrillas: Robert G. [I.?] Boss, lieutenant, C. S. Army, commanding band; Hiram Carter, lieutenant, C. S. Army; William H. Deagle, private, who were turned over to the provost-marshal at Point Lookout, Md.

I am, sir, very respectfully, your obedient servant,

FOXHALL A. PARKER,
Commander, Commanding Potomac Flotilla.

Hon. GIDEON WELLES,
Secretary of the Navy.

Report of Acting Volunteer Lieutenant Hooker, U. S. Navy, commanding First Division Potomac Flotilla.

U. S. S. COMMODORE READ,
St. Inigoes, Md., June 23, 1864.

SIR: I have the very great pleasure to report that from information which I had received I was induced to land a detachment of my men last night, under command of Acting Master Street, for the purpose of capturing some guerrillas said to be at the mouth of the Rappahannock.

The party consisting of 30 men and 3 officers left Butler's Hole in boats towed by the *Jacob Bell* at 9 o'clock p. m. At 10:30 p. m. they entered Sturgeon Creek, and landing, sent the boats back to the *Bell*, which vessel at once took them to Jackson Creek, Piankatank River, while with the *Commodore Read* I cruised off Broad and Sturgeon creeks. At 7 o'clock this morning the *Bell* returned with the expedition on board, it having been eminently successful in surprising and capturing the following guerrillas and torpedo men, viz: Robert G. [I.?] Boss, lieutenant, C. S. Army, commanding band; Hiram Carter, lieutenant, C. S. Army; William H. Deagle, private (commanded the party which fired on Acting Master Tole); Isaac Deagle; John Harvey; H. C. Martin, M. D., resident surgeon, but said to be connected with the band.

These prisoners I have turned over to the commanding officer at Point Lookout,

A horse belonging to one of the officers I have landed at this place.

Very respectfully, etc.,

EDWARD HOOKER, etc.,
Commanding First Division Potomac Flotilla.

Commander F. A. PARKER, U. S. Navy,
Commanding Potomac Flotilla.

Letter from Acting Volunteer Lieutenant Hooker, U. S. Navy, commanding First Division Potomac Flotilla, to Colonel Draper, U. S. Army, transferring captured guerrillas.

U. S. S. COMMODORE READ,
Off Point Lookout, Md., June 23, 1864.

SIR: I beg leave to report to you that on a successful raid made by my men last night, I captured the following guerrillas and torpedo men, viz:

Robert G. [I. ?] Boss, lieutenant, C. S. Army, commanding the band;
Hiram Carter, lieutenant, C. S. Army;
William H. Deagle, private (formerly in command of a band);
Isaac Deagle, private;
John Hardy, private;
Dr. H. C. Martin, resident surgeon, but supposed to be connected with the band.

Of the above, Boss is an old offender and reported to have been guilty of many atrocities, murder included.

William H. Deagle has killed several of our men, and Acting Master J. C. Tole carries a scar in his face from his bullets.

J. Hardy seems not very offensive.

Dr. Martin is a resident physician and his services are probably needed by the people living near him; perhaps a parole would cover him.

I turn over the above prisoners to your charge, etc.

Very respectfully, your obedient servant,

EDWARD HOOKER,
Actg. Vol. Lieut., U. S. Navy, Comdg. First Div. Potomac Flotilla.

Colonel DRAPER,
Commanding Forces at Point Lookout.

Letter from the chief quartermaster, Washington, D. C., to the Secretary of the Navy, requesting protection of gunboat to working party at Aquia wharves.

CHIEF QUARTERMASTER'S OFFICE,
Washington Depot, Washington, D. C., June 23, 1864.

SIR: The Quartermaster-General has informed this office that guerrillas are destroying the wharves at Aquia Creek, and directs that such of the lumber, etc., as may not be destroyed be brought away. In order that this may be done I have the honor to request that a gunboat

be sent to protect the working party, and that I may be informed at what time it will be there, provided the request can be granted.

I have the honor to be, very respectfully, your obedient servant,

D. H. RUCKER,
Brigadier-General and Quartermaster.

Hon. GIDEON WELLES,
Secretary of the Navy, Washington, D. C.

[Endorsement.]

Write to Parker and have him communicate result to Department.

[G. WELLES.]

Report of Commander Parker, U. S. Navy, commanding Potomac Flotilla, of the presence of a U. S. gunboat off Aquia Creek, as protection against guerrillas.

U. S. S. ELLA,
Potomac Flotilla, June 29, 1864.

SIR: In reply to your letter of the 23d instant, I have the honor to inform you that a gunboat is now stationed off Aquia Creek, waiting to protect the detachment from the Quartermaster's Department.

A gunboat has always been stationed near Aquia Creek, with orders to shell guerrillas whenever they make their appearance.

I am, sir, very respectfully, your obedient servant,

FOXHALL A. PARKER,
Commander, Commanding Potomac Flotilla.

Hon. GIDEON WELLES,
Secretary of the Navy.

Destruction of salt works in Shelton Creek, Virginia, June 30, 1864.

Report of Commander Parker, U. S. Navy, commanding Potomac Flotilla.

U. S. S. ELLA,
Potomac Flotilla, July 6, 1864.

SIR: I have the honor to inform the Department that on the 30th ultimo an expedition sent to Shelton's Creek, on the Rappahannock River, Virginia, by Acting Volunteer Lieutenant Hooker, succeeded in destroying a salt works recently established there, with its evaporators and tanks.

A number of buildings connected with the works, with carts, wood, and grain were burned.

I am, sir, very respectfully, your obedient servant,

FOXHALL A. PARKER,
Commander, Commanding Potomac Flotilla.

Hon. GIDEON WELLES,
Secretary of the Navy.

Report of Acting Volunteer Lieutenant Hooker, U. S. Navy, commanding First Division Potomac Flotilla.

U. S. S. COMMODORE READ,
Rappahannock River, Virginia, July 1, 1864.

SIR: I have the honor to report that from information which I had received I became convinced that within a short time extensive salt

works had been established on the Rappahannock, and consequently started yesterday to look for them, having in company the *Bell* and *Freeborn*. During the afternoon I sent Acting Master Arthur, with three armed boats, to examine Shelton's Creek near the Corrotoman, and he there discovered the salt works, built in an excavation which completely hid them from view. There were several large evaporators and tanks, and the negroes there stated that the works would make 75 bushels of salt per day; that they had been in operation about three weeks, and were at work for the Confederate Government.

In connection with the works was a large stable, a granary containing about 200 bushels of corn, a number of wagons and carts, about 100 cords of wood, and several flatboats, used to carry the salt across the river; that there were also a few barrels of salt. The evaporators and tanks were broken up, and all the buildings, grain, carts, wood, etc., burned. The boats also were destroyed. The horses, 12 in number, the negroes said, had been taken away when they saw our boats approaching.

Very respectfully, your obedient servant,

EDWARD HOOKER,
Actg. Vol. Lieut., U. S. Navy, Comdg. First Div. Potomac Flotilla.

Commander F. A. PARKER, U. S. Navy,
Commanding Potomac Flotilla.

Report of Acting Master Arthur, U. S. Navy, commanding U. S. S. Thomas Freeborn.

U. S. S. FREEBORN,
Potomac Flotilla, June 30, 1864.

SIR: In obedience to your order I took two armed boats from this vessel, accompanied with one from the U. S. S. *Commodore Read*, and landed at Shelton's Creek, about 30 miles from the mouth of the Rappahannock River, where I found an extensive salt works, six large kettles containing 30 gallons, and a large vat or tank containing about 150 gallons of water. The construction was entirely hidden from the river, a place having been cut in the bank for its erection.

I also found a large quantity of grain, agricultural implements, and tinner's tools. As I had no means of getting them off, I set fire to the buildings and burned them. The salt works I entirely destroyed, with about 100 cords of wood which had been hauled there for the purpose of making salt.

Information I received from the negro that attended the works was that he could make 75 bushels of salt per day, which was conveyed across the river in boats and sent to Richmond.

It had been in operation only three weeks.

Very respectfully, your obedient servant,

W. A. ARTHUR,
Acting Master, Commanding.

Acting Volunteer Lieutenant EDWARD HOOKER,
U. S. S. Commodore Read.

Report of Acting Volunteer Lieutenant Hooker, U. S. Navy, commanding First Division Potomac Flotilla, of expedition to Dividing Creek, Virginia, for the capture of guerrillas.

U. S. S. COMMODORE READ,
Wicomico River, Virginia, July 4, 1864.

SIR: A day or two ago I received information that a company of guerrilla cavalry was about being formed in the lower part of the neck

between the Rappahannock and Potomac rivers. Having learned the names of some of the citizens engaged in the movement, I last night sent an expedition of 45 men and 4 officers, under the command of Acting Master Street, to try and capture some of them. This party was taken into Dividing Creek by the *Freeborn* and *Bell*, with orders to land the men at early daylight to join me in the Great Wicomico, the distance across being about 6 miles. The landing was made at 10 p. m., the *Freeborn*, however, unfortunately disabling her rudder in leaving the creek, and being obliged to anchor off the bar, by which accident the arrival of the *Bell* was delayed.

With the *Read* and *Fuchsia* I proceeded to the Wicomico River, where I landed 20 men, under Acting Ensign Shurtleff, to cooperate with the detachment from below should they need assistance.

The expedition was not as successful in captures as I had hoped it would be. I, however, have Thomas Bell [Ball?], a captain in the Confederate Army, and the same man who murdered a cavalry officer when Kilpatrick's forces were in this region about a year and a half ago; also his young brother, a lieutenant in the guerrilla company.

The expedition arrived in safety on the banks of Mill Creek, at which place I was to take them off. My boats from below not having arrived, the embarkation was made more difficult. While embarking the men, two of the *Fuchsia's* men, Dennis Murphy, quartermaster, and John Lloyd, seaman, stole away from the party and secreted themselves in some place, taking their arms with them. As soon as missed, a party was sent in search of them, and while searching, 3 of the party were intercepted by a cavalry force of about twenty men, and 2 of the the number (Simon Terwilliger, coal heaver, and Joseph Willet, landsman, both from the *Fuchsia*), were captured, they being completely surprised in doing so. The cavalry company forming now numbers, I am informed, 100 men, and as many more, it is said, will be added soon. As yet they have no thorough organization, but are being formed by a Captain Eubank, of the regular Confederate cavalry. At 10 a. m. the remainder of the party were embarked safely, and soon after, the cavalry coming within range of our guns, I dispersed them with my 100-pounder rifle, throwing several shells into their midst, but with what effect I am unable to say. Subsequently Captain Eubank, under flag of truce, offered to exchange two of the sailors for the officers in my hands, man for man, an offer which I at once declined.

Very respectfully, your obedient servant,

EDWARD HOOKER,
Acting Volunteer Lieutenant, U. S. Navy.

Commander F. A. PARKER,
Commanding Potomac Flotilla.

Report of Acting Master Street, U. S. Navy, commanding U. S. S. Fuchsia, regarding expedition to Dividing Creek, Virginia, for the capture of guerrillas.

U. S. S. FUCHSIA,
Rappahannock River, Virginia, July 4, 1864.

SIR: Agreeably to your order of the 3d instant to take command of a shore party, consisting of 45 men and 4 officers, to be conveyed to Dividing Creek, Virginia, in the U. S. S. *Freeborn*, and thence by land to Mill Creek, on the [Great] Wicomico River, I would respectfully

report as follows: The force was landed at the farm of ———, on Dividing Creek, at 10 p. m., not finding any force here. I learned, however, that a cavalry force was seen in the vicinity during the day. Pushing on to the residence of Captain Ball [Bell?], we succeeded in capturing him, and also his brother (a private). From here we proceeded on the road to Mill Creek, marching a distance of 8 miles, searching several houses on our way for soldiers, arriving at the mouth of the creek at 4 o'clock a. m. this morning, and made signal to be conveyed on board.

After sending on board half of the command, it was reported that two men, named John Lloyd, seaman, and Dennis Murphy, quartermaster, left the ranks without permission. I accordingly ordered Mr. Cobb, master's mate, to go in search of them. While so doing a cavalry force rode up and capured two men named Simon Terwilliger, coal heaver, and Joseph Willet, landsman. Not having a sufficient force on shore, and knowing that a large cavalry force was in the vicinity, I did not deem it prudent to pursue. I regret exceedingly the loss of four men; yet it would not have occurred had it not been a direct disobedience of orders by Murphy and Lloyd.

Very respectfully,

WM. TELL STREET,
Acting Master, Commanding.

Acting Volunteer Lieutenant EDWARD HOOKER,
Commanding First Division Potomac Flotilla.

Letter of disapproval from Commander Parker, U. S. Navy, commanding Potomac Flotilla, to Acting Volunteer Lieutenant Hooker, U. S. Navy, commanding First Division.

U. S. S. ELLA,
Potomac Flotilla, July 6, 1864.

SIR: I have received your communication of the 4th instant and am not surprised at the result of your expedition.

I very seriously disapprove of seamen being sent after cavalrymen out of the range of your guns.

Respectfully, yours,

FOXHALL A. PARKER,
Commander, Commanding Potomac Flotilla.

Acting Volunteer Lieutenant E. HOOKER,
Commanding First Division Potomac Flotilla.

Report of Acting Volunteer Lieutenant Hooker, U. S. Navy, commanding First Division Potomac Flotilla, regarding movements of Confederate cavalry on the peninsula.

U. S. S. COMMODORE READ,
Rappahannock River, Virginia, July 6, 1864.

SIR: I send up the *Fuchsia* to St. Inigoes to-day, and as soon as she returns I will come up myself.

There is no news of importance except the gathering of cavalry on the neck between the Rappahannock and Potomac rivers. One company of the Second C. S. Cavalry is there under Captain Eubank, and it is reported that five more companies are organizing near Heathsville and Whitestone. To-day there is a rumor of quite a body of them at Carter's Creek preparing ambuscades, etc., hoping to catch some of our boats.

If a strong force were landed at Kinsale to sweep the peninsula down, I have no doubt but they would get many prisoners and a quantity of fine horses.

Very respectfully, your obedient servant,

EDWARD HOOKER,
Actg. Vol. Lieut., U. S. Navy, Comdg. First Div. Potomac Flotilla.

Commander F. A. PARKER, U. S. Navy,
Commanding Potomac Flotilla.

[Telegram.]

HEADQUARTERS NEAR BERMUDA HUNDRED,
July 7, 1864—10 p. m.
(Received in cipher 12 p. m.)

A rebel deserter reports that it is part of Early's plan to attack Point Lookout and release the prisoners, amusing us meanwhile at Martinsburg. This is sent for what it is worth.

B. F. BUTLER,
Major-General.

Colonel TOWNSEND,
Assistant Adjutant-General.

[Telegram.]

NAVY DEPARTMENT, [*July 8, 1864.*]

Take additional precautions relative to covering the camp of prisoners at Point Lookout and its approaches by your gunboats. Answer.

GIDEON WELLES,
Secretary.

Commander F. A. PARKER,
Commanding Potomac Flotilla, St. Mary's, Md.

[Telegram.]

ST. MARY'S, MD., *July 8, 1864.*
(Received at Washington 12:40 a. m.)

Telegram received and will be obeyed. I send another gunboat now, making three in all.

T. H. EASTMAN,
Lieutenant-Commander, U. S. Navy, for Commander Parker.

Hon. GIDEON WELLES,
Secretary Navy.

[Telegram.]

BALTIMORE, *July 10, 1864.*
(Received at Washington 12:40 a. m.)

Rebels undoubtedly cut Northern Central Road at Cockeysville and also at Texas, 3 miles this side. It is now confidently believed they are making for Philadelphia, Wilmington and Baltimore Road to endeavor

to cut it and destroy the bridge. This is merely small cavalry raid. Impression still prevails main body of rebels gone toward Annapolis Junction. Of course Baltimore and Ohio Railroad badly damaged; Northern Central and Baltimore and Ohio sent considerable [of] their rolling stock toward Philadelphia.

Excitement still continues, but good order prevails.

There are some encouraging features, though not prudent to publish.

J. WILLS.

INQUIRER AND CHRONICLE.

[Endorsement.]

Forwarded for information of the honorable Secretary of the Navy.

[Telegram.]

NAVY DEPARTMENT, *July 10, 1864.*

Send no boats to Baltimore. Send one to Havre de Grace, one to Gunpowder [River] bridge, and one to Bush [River] bridge.

The *Minnesota* is ordered to Point Lookout, and four gunboats from Hampton Roads will come into the Potomac. Answer.

GIDEON WELLES.

Lieutenant-Commander T. H. EASTMAN,
Navy Yard, Washington, D. C.

[Telegram.]

RELAY HOUSE, *July 10, 1864.*
(Received at Washington 12 m.)

I came out to my home late last night, and to my astonishment this morning find that our Army is falling back upon Baltimore. I have received your dispatch and will obey it immediately. Before receiving the dispatch I telegraphed to Captain Eastman, at the Washington navy yard, to send a gunboat to Baltimore, whither I intended to drive, as I fear railroad communication between this and Washington may be cut off. I also telegraphed to Captain Eastman to have the whole flotilla ready to act as circumstances may require.

What shall I now do? Go to Baltimore, or come to Washington in the first train?

FOXHALL A. PARKER,
Commander, Commanding Potomac Flotilla.

Hon. GIDEON WELLES,
Secretary Navy.

[Telegram.]

NAVY DEPARTMENT, *July 10, 1864.*

Join the flotilla at Washington. I have telegraphed Lieutenant-Commander Eastman not to send any boats to Baltimore, but to send one to Havre de Grace, one to Gunpowder, and one to Bush River bridge.

GIDEON WELLES.

Commander F. A. PARKER,
Relay House, Baltimore.

[Telegram.]

ST. MARY'S, *July 10, 1864.*

You will proceed at once to Bush [River] bridge, and report to the commanding officer at that place, and cooperate with him until further orders. Use dispatch.

JAMES TAYLOR,
Commanding Officer.

Captain STREET.

[Telegram.]

NAVY YARD, WASHINGTON, *July 10, 1864.*
(Received 2 p. m.)

Gunboats have sailed as follows: *Currituck* to Havre de Grace, *Teaser* to Gunpowder bridge, *Fuchsia* to Bush bridge.

T. H. EASTMAN,
Lieutenant-Commander, U. S. Navy.

GIDEON WELLES.

[Telegram.]

NAVY DEPARTMENT, *July 10, 1864.*

If the *Massasoit* and *Saco* can be got here, send them without delay.

GIDEON WELLES.

Rear-Admiral S. H. STRINGHAM,
Commandant Navy Yard, Boston, Mass.

[Telegram.]

BALTIMORE, *July 11, 1864.*
(Received 2:40 p. m.)

From information just received, the bridge over Gunpowder River is burned.

The gunboat sent up to protect the bridge had no steam up, and permitted the rebels to run a burning train, which they had captured, upon the draw of the bridge.

LEW. WALLACE,
Major-General, Commanding.

Major-General HALLECK,
General in Chief.

[Telegram.]

NAVY YARD, WASHINGTON, *July 11, 1864.*
(Received 1:40 p. m.)

The *Currituck* has reached Havre de Grace; *Teaser*, Gunpowder bridge; *Fuchsia*, Bush bridge.

F. A. PARKER.

Hon. G. WELLES,
Secretary of Navy.

[Telegram.]

NAVY YARD, *July 11, 1864—9:30 a. m.*

Coast Survey steamer *Bibb* is here at the wharf, and can be got ready for service in a few hours. I think it advisable to have guns placed on her. Will you send orders to Commodore Montgomery to have it done?

F. A. PARKER.

G. V. FOX,
Assistant Secretary Navy.

[Telegram.]

NAVY DEPARTMENT, *July 11, 1864.*

Put guns on the *Bibb* and turn her over to Commander Parker when she is in order for steaming.

GIDEON WELLES,
Secretary of the Navy.

Commodore J. B. MONTGOMERY, U. S. Navy,
Commandant Navy Yard, Washington.

Letter from commandant navy yard, Washington, to Commander Parker, U. S. Navy, commanding Potomac Flotilla, regarding the arming of the U. S. S. Bibb.

COMMANDANT'S OFFICE, NAVY YARD,
Washington, July 11, 1864.

SIR: By telegram from Navy Department of this date I have been ordered to put arms on the *Bibb* and turn her over to you when she is in order for steaming.

She will be ready so soon as her guns and ammunition are on board, which will probably be this evening.

Very respectfully, your obedient servant,

J. B. MONTGOMERY.

Commander F. A. PARKER,
Commanding Potomac Flotilla.

[Telegram.]

ST. MARY'S, *July 11, 1864.*

You will proceed up to Washington immediately and shell all suspicious places.

By order of Captain Eastman:

JAMES TAYLOR,
Senior Officer.

Captain HOOKER.

[Telegram.]

ST. MARY'S, *July 11, 1864—7:50 p. m.*

The order for you to proceed at once to Washington and shell all suspicious places was by order of Lieutenant-Commander T. H. Eastman, and so stated in my order to you.

JAMES TAYLOR,
Senior Officer, in Charge.

Captain HOOKER,
Commodore Read.

[Telegram.]

U. S. S. FUCHSIA,
Off Bush River Bridge, Maryland, July 11, 1864—3 p. m.

I arrived at 12 m. Enemy in sight on the hill; left at our approach; all right here. Two trains captured and destroyed at Magnolia. Bridge over Gunpowder [River] burned. I have my vessel moored within 150 yards of the bridge. My battery has full command of the bridge.

WM. TELL STREET,
Commanding.

COMMANDING OFFICER U. S. S. CURRITUCK,
Havre de Grace.

Order of Acting Master Street, U. S. Navy, commanding U. S. S. Fuchsia, to Acting Second Assistant Engineer Mockabee, U. S. Navy.

U. S. S. FUCHSIA,
Off Bush River Bridge, Maryland, July 11, 1864.

SIR: You will proceed with the captured engine with six men to Perryville and deliver her over to the company. Return immediately to the vessel.

Respectfully,

WM. TELL STREET,
Acting Master, Commanding.

Acting Second Assistant Engineer J. C. MOCKABEE, U. S. Navy.

[Telegram.]

NAVY YARD, WASHINGTON, *July 11, 1864.*
(Received 4:15 p. m.)

The *Bibb* is the only vessel I have to send to Gunpowder bridge. She will be ready to leave the yard at sunset. I have telegraphed to Point Lookout and to St. Inigoes, and the vessels at both stations are vigilant.

F. A. PARKER.

Hon. G. WELLES.

[Telegram.]

NAVY YARD, WASHINGTON, *July 11, 1864.*
(Received 5 p. m.)

Will you please send an order for the workmen to work on the *Yankee* until she is ready for service, night and day? She came up for ten days and has been [here] nearly two months.

FOXHALL A. PARKER,
Commanding Flotilla.

G. V. FOX,
Assistant Secretary Navy.

[Telegram.]

NAVY YARD, WASHINGTON, *July 11, 1864.*
(Received 7:35 p. m.)

The *Bibb* has left for Gunpowder River.

F. A. PARKER,
Commanding Potomac Flotilla.

Hon. SECRETARY OF THE NAVY.

Report of Acting Master Street, U. S. Navy, commanding U. S. S. Fuchsia, of the saving of Bush River bridge, Maryland.

U. S. S. FUCHSIA,
Off Bush River Bridge, Maryland, [July 12, 1864]—11 a. m.

SIR: Will you please communicate the following via American Telegraph Company:

U. S. S. FUCHSIA,
Off Bush River Bridge, Maryland, July 12, 1864—11 a. m.

SIR: I arrived here at 12 m. yesterday, in time to save the bridge. The enemy were in sight on the hill. The shore force had just been driven in, and came off to us in small boats. All quiet at present.

Commander F. A. Parker,
Commanding Potomac Flotilla.

Very respectfully,

WM. TELL STREET,
Acting Master, Commanding.

[Actg. Vol.] Lieutenant-Commander [T. A.] HARRIS, U. S. Navy.

Order of Lieutenant-Commander Eastman, U. S. Navy, to Acting Volunteer Lieutenant Hooker, U. S. Navy, to furnish armed party.

U. S. S. ELLA, *July 12, 1864.*

SIR: Send to the *Ella* 20 men, armed for service, in launches, and 1 master's mate in charge, without provisions, as they will be furnished.

Respectfully,

T. H. EASTMAN,
Fleet Captain.

Acting Volunteer Lieutenant E. HOOKER,
Commanding U. S. S. Commodore Read.

[Telegram.]

NAVY DEPARTMENT, *July 13, 1864.*

Yourself, as all commanding officers junior to Commander Parker, will, on arrival at Point Lookout, report to him by telegraph to navy yard, and will not alter in any way his disposition of vessels of the flotilla.

GIDEON WELLES,
Secretary of the Navy.

Commander JNO. DOWNES, U. S. Navy,
Commanding U. S. S. R. R. Cuyler, Point Lookout.

[Telegram.]

NAVY YARD, *July 14, 1864—10:15 a. m.*

Cuyler has reported from Point Lookout, and the following vessels have arrived off the navy yard: *Mackinaw, Atlanta, Commodore Barney,* and *Morse.*

F. A. PARKER.

Hon. GIDEON WELLES,
Secretary of the Navy.

Order of Commander Parker, U. S. Navy, to Acting Volunteer Lieutenant Hooker, U. S. Navy, to proceed to Rappahannock River.

U. S. S. ELLA, *July 14, 1864.*

SIR: You will proceed with all dispatch to the Rappahannock River and resume your duties in charge of the blockade off the mouth of that river.

Respectfully,

FOXHALL A. PARKER,
Commander, Commanding Potomac Flotilla.

Acting Volunteer Lieutenant E. HOOKER,
Comdg. U. S. S. Commodore Read, First Div. Potomac Flotilla.

[Telegram.]

NAVY DEPARTMENT, *July 14, 1864.*

Send all the vessels belonging to the North Atlantic Blockading Squadron, except the *Mackinaw*, to the squadron immediately.

Let each take a copy of the order just sent to the yard for Admiral Lee, who is on his way up the river.

GIDEON WELLES,
Secretary Navy.

Commander F. A. PARKER, U. S. Navy,
Commandant Potomac Flotilla, Navy Yard, Washington, D. C.

[Telegram.]

NAVY YARD, WASHINGTON, *July 14, 1864.*
(Received 3:10 p. m.)

Following-named vessels have sailed for their stations in the North Atlantic Blockading Squadron: *Commodore Barney, Morse, Atlanta.*

F. A. PARKER.

Hon. GIDEON WELLES,
Secretary Navy.

[Telegram.]

NAVY YARD, WASHINGTON, *July 14, 1864.*
(Received 10:40 p. m.)

Lieutenant-Commander Upshur has just reported his arrival in the *Minnesota* at Point Lookout. I have telegraphed to him to return [to] his station in the North Atlantic Blockading Squadron.

F. A. PARKER,
Commander, Commanding Potomac Flotilla.

Hon. GIDEON WELLES,
Secretary Navy.

Order of Commander Parker, U. S. Navy, to Acting Volunteer Lieutenant Hooker, U. S. Navy, regarding U. S. steamers Resolute and Atlanta.

U. S. S. ELLA, *July 14, 1864.*

SIR: You will relieve the U. S. S. *Resolute* and tow the U. S. S. *Atlanta* to Fortress Monroe and then return to the Rappahannock.

Respectfully,

FOXHALL A. PARKER,
Commander, Commanding Potomac Flotilla.

Acting Volunteer Lieutenant E. HOOKER,
Commanding U. S. S. Commodore Read.

[Endorsement.]

FLAGSHIP MALVERN,
Hampton Roads, Virginia, July 17, 1864.

Reported with *Atlanta* in tow, and will return to the Rappahannock in obedience to your orders.

S. P. LEE,
Acting Rear-Admiral, Comdg. North Atlantic Blockading Squadron.

[Telegram.]

NAVY YARD, WASHINGTON, *July 14, 1864.*
(Received 11:40 p. m.)

I have sent for a full report of the burning of Gunpowder [River bridge].

F. A. PARKER.

Hon. GIDEON WELLES,
Secretary Navy.

[Telegram.]

NAVY YARD, *July 16, 1864.*

The commanding officer of the *Teaser* reports that, when he reached Gunpowder River on Monday last, he found the bridge in flames. Not being able to get to the bridge, he sent two armed boats' crews to it, who landed, but found no enemy.

F. A. PARKER.

Hon. GIDEON WELLES.

Report of Acting Master Street, U. S. Navy, commanding U. S. S. Fuchsia.

U. S. S. FUCHSIA,
Off Bush River Bridge, Maryland, July 15, 1864.

SIR: All quiet here since the 13th. Enemy all gone, and the road sufficiently guarded, as follows: One full company, a detachment of 20 men, under the command of a lieutenant, and the steamers *Fuchsia* and *Minna*.

Captain Cosden made a reconnoissance in the direction of Magnolia, but saw no enemy.

Very respectfully,

WM. TELL STREET,
Acting Master, Commanding.

General LEW. WALLACE,
Commanding Forces at Havre de Grace.

Letter from Acting Ensign McConnell, U. S. Navy, commanding U. S. S. Bibb, to Acting Master Street, U. S. Navy, commanding U. S. S. Fuchsia, stating his inability to reach Bush River, Maryland.

U. S. S. BIBB,
Off Havre de Grace, July 16, 1864.

I send Mr. [H. C.] Borden to communicate with you. He carries your mail and some dispatches.

You will see that by my orders I was to stop at Bush River, but being unable to get a pilot, and having been aground some eight times, I thought I would come here, and if you needed my services I would ask you to send me a pilot or get one here.

The *Jacob Bell* came in to Gunpowder [River] last evening, and sent the *Teaser* to St. Inigoes. Everything is quiet at Gunpowder. The bridge will be in working order in a week's time.

It was impossible for me to get up nearer than 5 miles to the bridge, consequently I was of no service there.

I understand Admiral Lee, with a large portion of the James River Fleet, is in the Potomac.

In haste, your sincere friend,

GEO. E. MCCONNELL, U. S. Navy.

[Acting Master W. T. STREET.]

Report of Acting Master Street, U. S. Navy, commanding U. S. S. Fuchsia, of his arrival at Bush River Bridge, Maryland.

U. S. S. FUCHSIA,
Off Bush River Bridge, Maryland, July 18, 1864.

SIR: Receiving at 3 o'clock on the afternoon of the 10th instant, while lying off Point Lookout, a telegraphic order to proceed to Bush River bridge, Maryland, I would respectfully report the following:

I arrived off the mouth of the river at 7 a. m. on the 11th. Not having a pilot acquainted with the channel, I grounded twice on trying to enter, but, soon getting afloat again, I came to anchor and sent a boat on shore for a pilot, but none could be found. Fortunately, a schooner was coming out of the river at the time. I ordered her back to show us the channel. Having a good tide, I succeeded in getting over the mud, and arrived at the bridge at 12 m. and moored the vessel 150 yards from the bridge. At this time the shore force, consisting of twenty-two men, under the command of a lieutenant, was coming off in a small boat, having been driven by the enemy. They reported the ememy on both sides of the river, and that the telegraph operator had just left his station. Shortly after cavalry were seen on the hill (right bank), when I opened fire upon them, causing them to fall back beyond

our range. Had we been fifteen minutes later I have no doubt they would have had the bridge on fire. The soldiers were again landed and pickets thrown out, and during the afternoon were twice driven in, but the enemy would not advance from under cover of the woods or within range. Finding they could not approach the bridge, we were not annoyed by them after 7 p. m.

I am, sir, your obedient servant,

WM. TELL STREET,
Acting Master, Commanding.

Commander F. A. PARKER, U. S. Navy,
Commanding Potomac Flotilla.

[Telegram.]

POINT LOOKOUT, *July 18, 1864.*
(Received at Washington 6:10 p. m.)

The commanding general at this point deems reliable the following information which he has just obtained from four refugees: That 800 sailors and marines, under John T. Wood, left Richmond on the 7th or 8th of July, to man two armed blockade runners at Wilmington, N. C., for the purpose of attempting the release of prisoners confined here. Will telegraph to senior officer at Fortress Monroe.

Respectfully,

M. S. STUYVESANT,
Lieutenant, Commanding Minnesota.

Hon. G. WELLES,
Secretary Navy.

Report of Acting Volunteer Lieutenant Hooker, U. S. Navy, commanding First Division Potomac Flotilla, of his arrival at Fortress Monroe with U. S. S. Atlanta.

U. S. S. COMMODORE READ,
Rappahannock River, Virginia, July 19, 1864.

SIR: I have to report that I arrived at Fortress Monroe on Sunday morning, with the *Atlanta* in tow, all right, and after reporting to Admiral Lee returned to this station without delay.

Acting Master Tole having reported to me that he has carpenters on board and only material enough to keep them at work to-day, I send him to St. Inigoes.

He also verbally reports picking up four rebel deserters, who gave information of a proposed attack on Point Lookout, which information he had already forwarded to you; in consequence I am cruising at night more out in the bay than usual.

There is a report that the cavalry force on the neck amounts to about 400, principally old men and boys. There is no other news of any importance.

Very respectfully, your obedient servant,

EDWARD HOOKER,
Actg. Vol. Lieut., U. S. Navy, Comdg. First Div. Potomac Flotilla.

Commander F. A. PARKER, U. S. Navy,
Commanding Potomac Flotilla.

Order of the Secretary of the Navy to Commander Parker, U. S. Navy, commanding Potomac Flotilla, extending the limits of his command.

NAVY DEPARTMENT, *July 19, 1864.*

SIR: The *Verbena* and *Juniper*, tugs, are attached to the Potomac Flotilla, and the limits of your command are extended to embrace the railroad communications as far north as Havre de Grace.

You will therefore afford those lines ample protection.

Very respectfully,

GIDEON WELLES,
Secretary of the Navy.

Commander FOXHALL A. PARKER,
Commanding Potomac Flotilla.

Letter from Acting Master Schulze, U. S. Navy, to Acting Master Street, U. S. Navy, regarding U. S. transport Minna.

U. S. S. JACOB BELL,
Potomac Flotilla, July 21, 1864.

SIR: As you have no use for the transport *Minna* at Bush River, you will send her to Gunpowder [River] bridge without delay, and order her captain to report to me.

Very respectfully, your obedient servant,

G. C. SCHULZE,
Acting Master, Commanding, Senior Naval Officer Present.

Acting Master W. T. STREET,
Senior Officer at Bush River.

Report of Acting Volunteer Lieutenant Hooker, U. S. Navy, commanding First Division Potomac Flotilla, stating estimated Confederate force on the Northern Neck of Virginia.

U. S. S. COMMODORE READ,
Rappahannock River, Virginia, July 21, 1864.

SIR: There is no very important news. The cavalry on the neck is variously estimated at from 400 to 600, and it is reported that one or more fieldpieces are to be added to the force. Their headquarters are at the camp which was destroyed some months ago by Acting Master Street and which has been rebuilt since.

No other news; all quiet.

Very respectfully, your obedient servant,

EDWARD HOOKER,
Actg. Vol. Lieut., U. S. Navy, Comdg. First Div. Potomac Flotilla.

Commander F. A. PARKER, U. S. Navy,
Commanding Potomac Flotilla.

Letter from commandant navy yard, Washington, to Commander Parker, U. S. Navy, regarding U. S. S. Verbena.

COMMANDANT'S OFFICE, NAVY YARD,
Washington, July 21, 1864.

SIR: By order of the Department (having completed repairs on the U. S. tug *Verbena*) she is turned over to your command.

Very respectfully, your obedient servant,

J. B. MONTGOMERY,
Commandant.

Commander F. A. PARKER,
Commanding Potomac Flotilla.

Report of Commander Parker, U. S. Navy, commanding Potomac Flotilla, transmitting report of the burning of steamer Kingston by a party of Confederates, July 24, 1864.

U. S. S. ELLA,
Potomac Flotilla, August 1, 1864.

SIR: I have the honor to enclose herewith a copy of the report of H. F. Dorton, commanding U. S. S. *Sophronia*, of the burning of the steamer *Kingston*.

I am, sir, very respectfully, your obedient servant,

FOXHALL A. PARKER,
Commander, Commanding Potomac Flotilla.

Hon. GIDEON WELLES,
Secretary of the Navy.

[Enclosure.]

U. S. SCHOONER SOPHRONIA,
Potomac Flotilla, July 25, 1864.

SIR: I have the honor to report to you that at 4:30 this afternoon the captain and crew of the steamer *Kingston*, consisting of twelve men and two colored women, came on board this vessel and reported the capture and destruction of the steamer *Kingston* by a party of guerrillas while aground between Smith's Point and Windmill Point on the Virginia shore of Chesapeake Bay. John Smithers, master of the steamer *Kingston*, makes the following statement:

On the morning of Saturday, July 23, at about 3 o'clock, while on his passage from Fortress Monroe to Washington, the steamer *Kingston*, through the carelessness of the pilot, got aground on Diamond Marshes, between Smith's Point and Windmill Point, on the Virginia side of Chesapeake Bay. He endeavored to get his vessel off all day Saturday, but without any success. On the following morning, Sunday (July 24), at about 8 o'clock, a party of four men appeared on the beach with a flag of truce, ordering Captain Smithers to send his boat ashore within fifteen minutes, or else they would fire on the steamer. At the same time Captain Smithers discovered about forty men in two squads, one squad dragging a fieldpiece and the other apparently a caisson, crossing the marsh endeavoring to get their piece in position. Captain Smithers at once manned his boat and abandoned the steamer. He was pursued and fired upon by the enemy in canoes. They, however,

soon gave up the chase and turned their attention to the steamer, which they boarded and burned before Captain Smithers and crew got out of sight. Captain Smithers says that while he was aground on Saturday there was a number of canoes all around the steamer pretending to be fishing but in reality watching his movements, and he is of the opinion that they were men living in that immediate neighborhood.

The *Kingston* was a side-wheel steamer of 200 tons, owned in Philadelphia, and was at the time of her capture chartered by the Government.

I have sent Captain Smithers and his crew to Washington by the steamer *Greyhound*, he having orders for Captain Allen, assistant quartermaster, at Washington.

Very respectfully, your obedient servant,

H. F. DORTON,
Acting Ensign, Commanding.

Commander F. A. PARKER,
Commanding Potomac Flotilla.

Report of Commander Parker, U. S. Navy, commanding Potomac Flotilla, transmitting report of Acting Ensign Sheridan, U. S. Navy, commanding U. S. S. Teaser, explaining causes of delay in reaching Gunpowder River bridge.

U. S. S. ELLA,
Potomac Flotilla, July 25, 1864.

SIR: I have the honor to enclose herewith a report from Acting Ensign P. Sheridan, commanding U. S. S. *Teaser*, explaining the reason why the *Teaser* did not arrive at Gunpowder bridge in time to prevent its being burned.

I am, sir, very respectfully, your obedient servant,

FOXHALL A. PARKER,
Commander, Commanding Potomac Flotilla.

Hon. GIDEON WELLES,
Secretary of the Navy.

[Enclosure.]

U. S. S. TEASER,
Naval Depot, St. Iginoes, July 20, 1864.

SIR: In obedience to your orders of the 10th instant, I immediately weighed anchor and proceeded to Gunpowder River, Maryland. On the night of the 10th instant I was obliged to put into Patuxent River for harbor, the wind blowing heavy from southeast. At 4 a. m. on the morning of the 11th instant I weighed anchor and proceeded up the bay; the vessel was leaking badly. During the forenoon the exhaust pipe commenced to leak very badly, and it soon became impossible for the engineer to keep steam enough to run the vessel. I made sail with the forward and after awning to keep steerageway enough to head our course.

When off Annapolis, we were obliged to take the exhaust pipe out and repair it temporarily. At 6:40 p. m. of the 11th instant I anchored off naval depot, Baltimore, Md. On the evening of the 12th instant, having finished repairs to the exhaust pipe, I weighed anchor and proceeded on my way to Gunpowder River. On my arrival there I found the bridge had been destroyed, and, my vessel drawing too much water,

I could not get nearer than 5 miles. I then went to the bridge in my cutter and communicated with the transport *Juniata*, lying there. I found her (the *Juniata*) without arms and provisions, and after consultation with Acting Ensign Herring, of the *Juniata*, I thought it advisable for me to proceed to Baltimore and communicate the facts to the commodore commanding.

Upon reporting the condition of the vessels at Gunpowder River, Commodore Dornin gave me orders to see that they were supplied with arms and provisions, etc., immediately. On my return with the supplies to Gunpowder River I found my vessel had been ordered by Acting Master Schulze, commanding U. S. S. *Jacob Bell*, to report to naval station, St. Inigoes. This occurred during my absence.

I am, sir, very respectfully, your obedient servant,

PHILIP SHERIDAN,
Acting Ensign, Commanding.

FOXHALL A. PARKER,
Commander, Commanding Potomac Flotilla.

Report of Commander Parker, U. S. Navy, commanding Potomac Flotilla, regarding U. S. S. Bibb.

U. S. S. ELLA,
Potomac Flotilla, July 26, 1864.

SIR: Professor Bache, desiring the services of the *Bibb*, and finding her draft of water too great for the service I designed for her in the flotilla, I have turned her over to the Coast Survey.

I have the honor to be, very respectfully, your obedient servant,

FOXHALL A. PARKER,
Commander, Commanding Potomac Flotilla.

Hon. GIDEON WELLES,
Secretary of the Navy.

[Telegram.]

WASHINGTON, *July 26, 1864.*

How near to the bridge can you get?

F. A. PARKER,
Navy Yard.

Acting Master STREET,
U. S. S. Fuchsia, Bush River.

[Telegram.]

U. S. S. FUCHSIA,
Off Bush River Bridge, Maryland, July 27, 1864.

SIR: I am now mooring the vessel 150 yards from the bridge. My battery covers all approaches.

Respectfully,

WM. TELL STREET,
Acting Master, Commanding.

Commander F. A. PARKER,
Commanding Potomac Flotilla.

Order of the Secretary of the Navy to Captain Gansevoort, U. S. Navy, commanding U. S. S. Roanoke, regarding duty at Point Lookout, Md.

NAVY DEPARTMENT, *July 30, 1864.*

SIR: Yours of the 28th instant has been received.

You are informed that you are on special service, for the defense of Point Lookout and the security of the prisoners from attack. You will communicate directly to the Department and consult with the military commander frequently.

No attack is anticipated from outside.

Very respectfully,

GIDEON WELLES,
Secretary of the Navy.

Captain GUERT GANSEVOORT, U. S. Navy,
Commanding U. S. S. Roanoke, Point Lookout, Md.

[Telegram.]

NAVY DEPARTMENT, *July 31, 1864.*

Have a gunboat at Aquia Creek to cooperate with Mr. Babcock, as per orders sent by him in army tug to that point.

GIDEON WELLES,
Secretary of the Navy.

Commander F. A. PARKER, U. S. Navy,
Commanding Potomac Flotilla, Navy Yard, Washington, D. C.

Order of the Secretary of the Navy to Commander Parker, U. S. Navy, commanding Potomac Flotilla.

NAVY DEPARTMENT, *July 31, 1864.*

SIR: You will pass and render all requisite assistance to Mr. J. C. Babcock, chief assistant to Colonel Sharpe, department provost-marshal-general, who, with a tug and scouts, are acting under orders from Lieutenant-General Grant. Conferring with Mr. Babcock, you will direct that such aid be afforded him as he may require.

Respectfully,

GIDEON WELLES,
Secretary of the Navy.

Commander F. A. PARKER, U. S. NAVY,
Commanding Potomac Flotilla.

[Telegram.]

ST. MARY'S, *July 31, 1864—1:25 p. m.*
(Received at Washington 5:40 p. m., July 31, 1864.)

The *Yankee* is lying at Aquia Creek. Will send another gunboat to Aquia Creek immediately.

F. A. PARKER,
Commander, etc.

Hon. G. WELLES,
Secretary Navy.

[Telegram.]

WASHINGTON, [*August*] *4, 1864.*
(Received Bush River, 9:30 a. m.)

You will get underway and proceed to the Rappahannock without delay.

W. [A.] ARTHUR,
Acting Master, U. S. Navy.

W. T. STREET,
Commanding U. S. S. Fuchsia.

Report of Commander Parker, U. S. Navy, commanding Potomac Flotilla, transmitting general order issued by military governor of Alexandria.

U. S. S. ELLA, *August 8, 1864.*

SIR: I have the honor to enclose herewith a copy of a general order of the general commanding at Alexandria, in which he tenders his thanks to the officers and crew of the *Adolph Hugel*, the guard vessel at that place.

I am, sir, very respectfully, your obedient servant,

FOXHALL A. PARKER,
Commander, Commanding Potomac Flotilla.

Hon. GIDEON WELLES,
Secretary of the Navy.

[Enclosure.]

GENERAL ORDERS, No. 29. } HEADQUARTERS MILITARY GOVERNOR, *Alexandria, Va., July 27, 1864.*

The general commanding desires to tender his thanks to the troops of his command, the armed employés of the quartermaster's department, and Acting Master Nickerson and the officers and men of the mortar boat *Adolph Hugel* for their cooperation and prompt response to his call for their aid in the defense of Alexandria.

By command of Brigadier-General Slough:

W. M. GWYNNE,
Captain and Assistant Adjutant-General.

[Telegram.]

NAVY DEPARTMENT, *August 9, 1864.*

Turn over the steamer *Mercury* to Commander Parker, of the Potomac Flotilla.

GIDEON WELLES,
Secretary of the Navy.

Commodore J. B. MONTGOMERY,
Commandant Navy Yard, Washington, D. C.

Letter from commandant navy yard, Washington, to Commander Parker, U. S. Navy, commanding Potomac Flotilla, regarding U. S. S. Mercury.

COMMANDANT'S OFFICE, NAVY YARD,
Washington, August 9, 1861.

SIR: By order of the honorable Secretary of the Navy, I turn over to you the U. S. S. *Mercury*, which arrived at this yard yesterday from New York.

Very respectfully, your obedient servant,

J. B. MONTGOMERY,
Commandant.

Commander F. A. PARKER,
Commanding Potomac Flotilla.

Order of Commander Parker, U. S. Navy, commanding Potomac Flotilla, to Acting Volunteer Lieutenant Hooker, U. S. Navy, commanding First Division, regarding cruising ground.

U. S. NAVAL DEPOT, ST. INIGOES, MD., *August 10, 1861.*

SIR: I am directed by Commander Parker, commanding Potomac Flotilla, to send the *Jacob Bell* to report to you for duty. Also, to say that it is desired by the commander of the flotilla that you do not ascend any of the rivers in Virginia, but to cruise along the shores on the Potomac, using the rivers only as a safe anchorage in the event of bad weather.

Very respectfully, your obedient servant,

JAMES TAYLOR,
Acting Master, U. S. Navy.

Acting Volunteer Lieutenant E. HOOKER,
Commanding U. S. S. Commodore Read, Potomac Flotilla.

[Telegram.]

WASHINGTON, *August 14, 1861.*

Take James Wilson and send Jackson to the *Tulip*. Be on your guard against John Taylor Wood, and hurry to the Rappahannock. The *Fuchsia* is ordered to join you. Answer this.

T. H. EASTMAN.

Captain HOOKER,
Commodore Read.

Report of Acting Volunteer Lieutenant Hooker, U. S. Navy, commanding First Division Potomac Flotilla, regarding U. S. steamers Mercury and Fuchsia.

U. S. S. COMMODORE READ,
Rappahannock River, Virginia, August 19, 1861.

SIR: Finding that the *Mercury* was not supplied with stores before coming down, I am under the necessity of sending her to St. Inigoes for them. I therefore ordered her to cruise up the bay during the night, and in the morning to go to St. Inigoes, get her stores, etc., and return at night to her station.

The *Fuchsia* will come up for coal and stores on Monday next.

There is no news of importance to communicate.

I sent to Point Lookout two soldiers who report that they were captured on the eastern shore of Maryland by a late expedition from near Smith's Point, and brought to Hurst's Creek, from whence they escaped and reached my ship.

Very respectfully, your obedient servant,

EDWARD HOOKER,
Actg. Vol. Lieut., Comdg. First Div. Potomac Flotilla.

Commander F. A. PARKER, U. S. Navy,
Commanding Potomac Flotilla.

Order from Lieutenant-Commander Eastman, U. S. Navy, to Acting Volunteer Lieutenant Hooker, U. S. Navy, regarding the removal of the Hitchcock family.

U. S. S. DON,
Potomac Flotilla, August 21, 1864.

SIR: By order of the commander, you will render Mr. E. D. Hitchcock such assistance as lies in your power in removing his family, provided it can be done under cover of the guns of your vessel.

Very respectfully,

T. H. EASTMAN,
Lieutenant-Commander, U. S. Navy.

Acting Volunteer Lieutenant E. HOOKER, U. S. Navy,
Commanding First Division Potomac Flotilla.

Report of Acting Volunteer Lieutenant Hooker, U. S. Navy, Commanding First Division Potomac Flotilla, regarding removal of the Hitchcock family.

U. S. S. COMMODORE READ,
Off Rappahannock River, Virginia, August 23, 1864.

SIR: The family of Mr. Hitchcock have been removed, and I send them to Point Lookout in the *Mercury*.

About 200 of the guerrillas were near the place and had avowed an intention to interfere with the removal, but they kept out of range and made no attempt to molest us. Mrs. Hitchcock informs me that there are about 1,000 guerrillas on this part of the neck, and that they are removing cattle, etc., to Richmond all the time. On Friday last 300 head were at Bowlers Ferry to cross, and there is scarcely a day when none are carried over.

The river is picketed and closely watched.

Very respectfully, your obedient servant,

EDWARD HOOKER,
Actg. Vol. Lieut., U. S. Navy, Comdg First Div. Potomac Flotilla.

Commander F. A. PARKER,
Commanding Potomac Flotilla.

[Telegram.]

EASTVILLE, *August 25, 1864.*

A refugee just from western shore reports that 300 guerrillas in Northumberland County, Va., have in contemplation a raid on the eastern shore. I have no gunboat here, and but a small force of infantry to guard Smith's and Hog islands. Can a gunboat be sent here? With a gunboat we would need no reenforcement.

The One hundred and thirty-eighth Ohio is now on board transports for Washington.

FRANK J. WHITE,
Major, Assistant Adjutant-General and Provost-Marshal.

Major HOFFMAN,
Assistant Adjutant-General.

[Telegram.]

U. S. S. COMMODORE READ,
Via [U. S. S.] Mercury and Point Lookout, August 27, 1864.

I am informed by telegraph from Eastville, via gunboat from York River, that an expedition of 300 men is to leave the Yeocomico or Coan River for Maryland, supposed to be for Smith's Island and Fog Point light. I have sent the *Fuchsia* to Smith's Island, and the *Mercury* will cruise in the bay, reporting to me again on Monday.

EDWARD HOOKER.

Commander F. A. PARKER,
St. Inigoes, Md.

Letter from Acting Volunteer Lieutenant Hooker, U. S. Navy, commanding First Division Potomac Flotilla, to Captain Gansevoort, U. S. Navy, senior officer, Point Lookout, Md., regarding rumored movement of guerrillas.

U. S. S. COMMODORE READ,
Off Rappahannock River, August 27, 1864.

SIR: I am informed by telegraph from Eastville, via gunboat from York River, that party of 300 men is about leaving Northumberland County, Potomac River, for some point in Maryland, supposed to be Smith's Island and Fog Point light. I have sent a gunboat to cruise near Smith's Island.

Will you permit the officer bringing this to communicate the same to General Barnes, and also to forward a dispatch to St. Inigoes for Commander Parker?

Very respectfully, your obedient servant,

EDWARD HOOKER,
Actg. Vol. Lieut., U. S. Navy, Comdg. First Div. Potomac Flotilla.

Captain G. GANSEVOORT,
Senior Officer, Point Lookout.

Order of Commander Parker, U. S. Navy, commanding Potomac Flotilla, to Acting Volunteer Lieutenant Hooker, U. S. Navy, commanding First Division, regarding rumored expedition of the enemy from Coan and Yeocomico rivers.

U. S. S. DON,
Potomac Flotilla, August 29, 1864.

SIR: I have received your dispatch in relation to the expedition said to [be] fitting out in Coan and Yeocomico rivers, and have directed that a blockade of these rivers be kept up until further orders. I think it more than probable, however, that an expedition having for its object the destruction of any of the light-houses on the eastern shore would take its departure from the Great Wicomico, Rappahannock, or the Piankatank, which rivers you should blockade with your vessel and the *Mercury* while the *Fuchsia* cruises off Smith's Island.

Look out for this vessel about four or five days hence; she is painted black.

I am, respectfully, yours,

FOXHALL A. PARKER,
Commander, Commanding Potomac Flotilla.

Acting Volunteer Lieutenant EDWARD HOOKER,
Commanding First Division.

Report of Acting Volunteer Lieutenant Hooker, U. S. Navy, commanding First Division Potomac Flotilla, regarding blockade of rivers, in view of rumored expedition of the enemy.

U. S. S. COMMODORE READ,
Off Rappahannock River, Virginia, August 29, 1864.

SIR: Your communications per *Mercury* are at hand and will receive prompt attention. I send the *Fuchsia* for coal, and the *Mercury* will be in want of coal on Thursday or Friday. I have received a rumor of an expedition from the Piankatank, probably, if contemplated, intended to cooperate with the one previously noted. I have, however, no definite information regarding it.

My own idea of the reported movement is that they will leave this coast and cross in small boats and canoes to the eastern shore, where they hope to be out of the track of the gunboats, and there capture vessels for transportation to eastern Virginia and lower counties of Maryland, from which points most of our forces have been removed. From there, if not checked they may reach the lighthouse on the seacoast. I shall keep a close watch on the Great Wicomico and adjacent rivers and creeks, as well as upon the Rappahannock and Piankatank rivers.

Captain Street will give you a verbal report of the communications which he had with persons on Tangier and Smith's islands, where he found the inhabitants expecting a raid from this coast.

Very respectfully, your obedient servant,

EDWARD HOOKER,
Actg. Vol. Lieut., U. S. Navy, Comdg. First Div. Potomac Flotilla.

Commander F. A. PARKER,
Commanding Potomac Flotilla, U. S. S. Don.

[Telegram.]

NAVY DEPARTMENT, *September 1, 1864.*

You will turn over to Commander Parker the steamer *Fairy* and inform him that orders will be sent him by to-day.

GIDEON WELLES,
Secretary of the Navy.

Commodore J. B. MONTGOMERY, U. S. Navy,
Commandant Navy Yard, Washington, D. C.

Order of the Secretary of the Navy to Commander Parker, U. S. Navy, commanding Potomac Flotilla, enjoining strict search of Virginia shore for smugglers.

NAVY DEPARTMENT, *September 1, 1864.*

SIR: The Department has information that there is much smuggling carried on opposite Charles County, Md. You will take possession of all boats found in that vicinity, on both sides of the river, causing strict search to be made for them, and use every means at your command to stop all crossing the river or entrance into any river, creek, or bay on the Virginia shore within the limits of your command.

Orders have been given to turn the steamer *Fairy* over to your command.

GIDEON WELLES,
Secretary of the Navy.

Commander F. A. PARKER,
Commanding Potomac Flotilla.

Report of Commander Parker, U. S. Navy, commanding Potomac Flotilla, acknowledging Department's order regarding suppression of smuggling.

U. S. S. DON,
Potomac Flotilla, September 1, 1864.

SIR: I have the honor to acknowledge the receipt of your letter of this date in relation to the smuggling carried on opposite Charles County, Md., and turning over the steamer *Fairy* to my command.

I will be careful to carry out the instructions of the Department to seize all boats found in the vicinity of Charles County on both sides of the river, etc.

I am, sir, very respectfully, your obedient servant,

FOXHALL A. PARKER,
Commander, Commanding Potomac Flotilla.

Hon. GIDEON WELLES,
Secretary of the Navy, Navy Department, Washington, D. C.

Order of the Secretary of the Navy to commandant naval station, Baltimore, regarding U. S. S. Rescue.

NAVY DEPARTMENT, *Setempber 2, 1864.*

SIR: Direct the U. S S. *Rescue* to proceed to St. Mary's and report to Commander F. A. Parker for duty in the Potomac Flotilla.

Very respectfully, etc.,

GIDEON WELLES,
Secretary of Navy.

Commodore T. A. DORNIN,
Commandant Naval Station, Baltimore.

GENERAL ORDERS, No. 1. } U. S. S. DON,
Flagship Potomac Flotilla, September 2, 1864.

Lieutenant-Commander T. H. Eastman having been relieved at his own request of the duties of captain of the flotilla and ordered to the command of the U. S. S. *Don*, Acting Ensign F. S. Eastman is hereby directed to assume the duties of chief of staff and will be respected accordingly.

FOXHALL A. PARKER,
Commander, Commanding Potomac Flotilla.

Acting [Volunteer] Lieutenant EDWARD HOOKER,
Commanding First Division.

Report of Commander Parker, U. S. Navy, commanding Potomac Flotilla, of the removal of telegraph cable across the Potomac River.

U. S. S. DON,
Potomac Flotilla, September 2, 1864.

SIR: I have the honor to report that in obedience to your order and that of the honorable Secretary of War of the 31st ultimo, the telegraph cable from Maryland Point across the Potomac was taken up by the military authorities on the 1st instant.

I am, sir, very respectfully, your obedient servant,

FOXHALL A. PARKER,
Commander, Commanding Potomac Flotilla.

Hon. GIDEON WELLES,
Secretary of the Navy, Navy Department, Washington, D. C.

Report of Commander Parker, U. S. Navy, commanding Potomac Flotilla, transmitting report regarding capture of a boat engaged in violation of the blockade.

U. S. S. DON,
St. Inigoes, Md., September 5, 1864.

SIR: I have the honor to enclose herewith a copy of report from Acting Ensign S. Owen, commanding U. S. S. *Primrose*, relating to the capture of a sailboat near the Virginia shore on the night of the 2d instant. As it is clearly proved that the boat was attempting to violate the blockade, and as she, with the merchandise she carried, would not pay the cost of adjudication by a prize court, I have directed that the boat be sent here for the use of the guard vessel at this depot and the merchandise be distributed among the captors.

I am, sir, very respectfully, your obedient servant,

FOXHALL A. PARKER,
Commander, Commanding Potomac Flotilla.

Hon. GIDEON WELLES,
Secretary of the Navy, Navy Department, Washington, D. C.

[Enclosure.]

U. S. S. PRIMROSE, *September 3, 1864.*

SIR: I have the honor to report that yesterday, at 11:30 p. m., this vessel captured a small sloop-rigged boat attempting to cross the Potomac River from Maryland to Virginia.

The place of capture was near Ragged Point, on the Virginia shore. The boat contained 4 men, 2 white and 2 colored, besides a quantity of miscellaneous articles of merchandise (see schedule below). The following are the names of the men:

Philip F. Edelen, a private in the First Maryland (rebel) Battery; had been on a visit to his friends, and was returning to his regiment; is a sharp, shrewd fellow, and is to all appearance a spy in the rebel service.

Jacob Gardy, formerly from Philadelphia; says he lives in Richmond County, Va., and ran away from there last March to escape the conscription, and that he was going over to bring his family to Maryland; says the goods belong to a Captain Pope, at Breton's Bay; don't know who owned the boat.

William Porter (colored) says Captain Pope promised him $15 if he would go in the boat.

Moses Hall (colored) was to receive the same compensation for his services as Porter.

Please find below schedule of articles captured, viz:

1 sailboat, rigged complete.
5 boxes felt hats.
7 pair brogans.
9 pair light shoes.
9 pair ladies' shoes.
2 small parcels of sheeting.
1 bolt calico and several remnants.
9 bottles castor oil.
3 bottles laudanum.
2 papers pepper.
1 file.
2 bottles snuff.
6 pounds nails.
1 piece coarse flannel.
600 percussion caps, revolver.
5 pounds gunpowder.
1 bottle whisky.

The men I delivered to the military authorities at Point Lookout, in obedience to your orders, receiving a receipt for them.

Respectfully, your obedient servant,

SILAS OWEN,
Commanding.

Commander FOXHALL A. PARKER,
Commanding Potomac Flotilla.

Report of Acting Volunteer Lieutenant Hooker, U. S. Navy, commanding First Division Potomac Flotilla, regarding movements of guerrillas.

U. S. S. COMMODORE READ,
Off Rappahannock River, Virginia, September 5, 1864.

SIR: I have just received information from two different sources that the enemy are preparing for some movement in this vicinity. Three boats have arrived from Richmond with their crews, and are quartered at the house of Henry Barlock, in Mill Creek, and report says that three more are expected.

I shall of course be on the lookout to guard against any attack. I should like also to try and capture them.

The north side of the Rappahannock is full of guerrillas, too. Mrs. Frazier (who was removed the other day by your order) reports that in the four counties there are 1,500. A raid through that region would probably give us many prisoners.

There are torpedoes at Bowlers Rocks, put there to protect the camp of instruction at Tappahannock.

Very respectfully, your obedient servant,

EDWARD HOOKER,
Actg. Vol. Lieut., U. S. Navy, Comdg. First Div. Potomac Flotilla.

Commander FOXHALL A. PARKER,
Commanding Potomac Flotilla.

[Telegram.]

ST. MARY'S, *September 7, 1864.*
(Received at Washington 12:40 p. m.)

I have all the information in reference to Mill Creek, and am organizing an expedition to that point. I shall be there at daylight to-morrow morning.

Lieutenant Hooker informed me a week ago that 300 men were coming out of Cove [Coan] River.

The 300 proved to be 12 men. I have these reports all the time.

FOXHALL A. PARKER,
Commander, U. S. Navy.

Commander WYMAN,
Navy Department.

[Telegram.]

POINT LOOKOUT, *September 7, 1864.*

SIR: General Barnes can not furnish troops without permission from the War Department. He will telegraph immediately, and, if granted, will be ready to move to-morrow night (8th instant). He says that it is impossible for him to get ready to-night.

The forces on the point are very much reduced. The general will telegraph you as soon as an answer is received from Washington. The general will not require any more gunboats at the point. The forces that the general will send are colored. Wind strong from N. N. E., with heavy sea. I will wait for an answer.

Respectfully,

WILLIAM TELL STREET,
Acting Master, Commanding.

Commander F. A. PARKER,
St. Inigoes, Md.

[Telegram.]

ST. INIGOES, *September 7, 1864.*

Leave at once for the Rappahannock. The *Currituck* is on her way there. Tell Lieutenant Hooker [to] keep a close blockade to-night off the Piankatank, Rappahannock, and Great Wicomico, and to come here at daylight to-morrow. The *Freeborn* will reach the Rappahannock to-night or early to-morrow.

F. A. PARKER,
Commander.

Acting Master STREET.

[Telegram.]

FORT MONROE, *September 9, 1864—3 p. m.*
(Received 4 p. m.)

Just from the Rappahannock. A force of cavalry, but no boats at Mill Creek; am going to City Point.

FOXHALL A. PARKER,
Commander, Commanding Potomac Flotilla.

Hon. G. V. FOX,
Assistant Secretary Navy.

Report of Acting Master Street, U. S. Navy, commanding U. S. S. Fuchsia, regarding Confederate forces.

U. S. S. FUCHSIA,
Potomac Flotilla, September 15, 1864.

SIR: I send the *Commodore Read* up for coal. It is important that the *Freeborn* or *Read* return as soon as possible, as during their absence I shall have to cruise off the mouth of both rivers. The *Mercury* is cruising off Great Wicomico. There are positively no boats or force at Mill Creek.

I learn from reliable authority that there are but 20 cavalry at Mathews Court-House.

Between the Rappahannock and Piankatank, from Urbana down, there are no forces, my informant in this case having ridden from Essex County, 10 miles above Urbana, to Fishing Bay, and saw no one. Between the Rappahannock and Potomac, from the bay to a line drawn from Carter's wharf, on the Rappahannock, to Coan River, on the Potomac, there is a force of about 400 (home guards).

In addition to the above, there is a guerrilla party of 12 men lurking on the bay shore—the same that recently crossed over to the eastern shore from Great Wicomico. I believe they are now somewhere on the Piankatank. I proceeded up the Piankatank a short distance yesterday, but saw nothing.

From Bowlers Rocks I have no information.

I am, sir, very respectfully, your obedient servant,

WM. TELL STREET,
Acting Master, Commanding.

Commander F. A. PARKER, U. S. Navy,
Commanding Potomac Flotilla.

Report of Commander Parker, U. S. Navy, commanding Potomac Flotilla, regarding boat expedition to Yeocomico River, in search of blockade runners, September 16, 1864.

U. S. S. DON,
Potomac Flotilla, September 24, 1864.

SIR: On the night of the 16th instant one of the boats of the U. S. S. *Currituck*, while in search of blockade runners at the mouth of Yeocomico River, was fired into from shore.

William King (captain of hold) was instantly killed and George H. McNeil (landsman) severely wounded.

The fire was promptly returned from the boats and the *Currituck*, and Acting Ensign Nelson, who commanded the boat, reports that a shell exploded in the midst of the shore party.

I am, sir, very respectfully, your obedient servant,

FOXHALL A. PARKER,
Commander, Commanding Potomac Flotilla.

Hon. GIDEON WELLES,
Secretary of the Navy, Navy Department, Washington, D. C.

Report of Acting Master Street, U. S. Navy, commanding U. S. S. Fuchsia, giving location of torpedoes in Rappahannock River.

U. S. S. FUCHSIA,
Rappahannock River, Virginia, September 18, 1864.

SIR: I have just received information that torpedoes are again sunk in the Rappahannock, as follows: One at Jones Point, two at Bowlers

Rocks between the Point of Rocks and Circus Point, and three others yet to put down. My informant states they have crossed over to the northern side of the river, probably with a view to putting them down in the Potomac.

I have not had an opportunity to go up the river yet, and from the above shall not do so until I hear from you.

I send the *Mercury* up for coal and to clean boilers.

I am, sir, your obedient servant,

WM. TELL STREET,
Acting Master, Commanding.

Commander F. A. PARKER, U. S. Navy,
Commanding Potomac Flotilla.

Order of Commander Parker, U. S. Navy, to commanding officer First Division, regarding his chief of staff.

U. S. S. DON,
Potomac Flotilla, September 21, 1864.

SIR: Acting Ensign Edmund A. Roderick has this day been appointed chief of staff of the Potomac Flotilla, and will be respected as such until further orders.

Respectfully, yours,

FOXHALL A. PARKER,
Commander, Commanding Potomac Flotilla.

COMMANDING OFFICER FIRST DIVISION POTOMAC FLOTILLA.

Report of Acting Master Street, U. S. Navy, commanding U. S. S. Fuchsia, regarding persons implicated in the death of commanding officer of the revenue steamer Reliance.

U. S. S. FUCHSIA,
Rappahannock River, Virginia, September 22, 1864.

SIR: Acting Master William A. Arthur, commanding U. S. S. *Freeborn*, has just returned from the Great Wicomico River, and brings the following information:

Having communicated on shore a short distance up the river, I learned that the persons implicated in the death of Captain [Thos. M.] Dungan, commanding the U. S. revenue steamer *Reliance*, are ——— Millbourne, ——— Pruitt, and ——— Whitington, living on the river, all citizens of Maryland, and formerly blockade runners. The home guard in that vicinity is commanded by Captain S. Covington.

By taking the vessels on this station I can make an expedition at night, landing at night, landing about forty men, and capture the above before the home guard can be mustered.

I am, very respectfully, your obedient servant,

WM. TELL STREET,
Acting Master, Commanding.

Commander F. A. PARKER, U. S. Navy,
Commanding Potomac Flotilla.

Expedition to Milford Haven and Stutt's Creek, Virginia, September 24, 1864.

Report of Commander Parker, U. S. Navy, commanding Potomac Flotilla.

U. S. S. DON,
Potomac Flotilla, October 4, 1864.

SIR: It being reported that the rebels were collecting boats in Milford Haven for the purpose of attacking the steamer blockading the Piankatank River, a number of armed boats, under the command of Acting Masters Street and Arthur and Acting Ensign Sheridan, went in search of them on the 25th [24th] ultimo, and succeeded in destroying four and capturing five of them. A large fishery, said to be worked for the rebel Government, was burned, and a seine brought off.

One of the boats captured will hold about forty men.

I have the honor to be, very respectfully, your obedient servant,

FOXHALL A. PARKER,
Commander, Commanding Potomac Flotilla.

Hon. GIDEON WELLES,
Secretary of the Navy.

Report of Acting Master Street, U. S. Navy, commanding U. S. S. Fuchsia.

U. S. S. FUCHSIA,
Rappahannock River, Virginia, September 26, 1864.

SIR: I have the honor to make the following report:

On the morning of the 24th instant, at 9:30 a. m., I proceeded, in company with the steamers *Freeborn* and *Mercury*, to Stutt's Creek, Mathews County, Va., for the purpose of capturing some boats that I had learned were there, and intended to be brought out to attack the vessel cruising in the mouth of the Piankatank. Anchoring the *Fuchsia* and *Freeborn* in the mouth of the Milford Haven, I took the *Mercury*, with the armed boats in tow, through the Haven and up Stutt's Creek about 3 miles to the farm of Mr. Hudgins, a noted rebel, where a force of 40 men were landed, under the command of Acting Master [Wm. A.] Arthur and Acting Ensign [Philip] Sheridan. Here were found several large boats and a fishery worked for the Confederate Government. Our force proceeded still farther up the creek, and found some smaller boats, which they destroyed. The object of the expedition being accomplished, I returned and arrived at the anchorage at 6 p. m.

The result of the expedition has been the capture of nine boats, four broken up, and five brought away, one of them capable of carrying fifty or sixty men; also a large fishery destroyed and seine taken.

I am, very respectfully, your obedient servant,

WM. TELL STREET,
Acting Master, Commanding.

Commander F. A. PARKER,
Commanding Potomac Flotilla.

Report of Acting Master Arthur, U. S. Navy, commanding U. S. S. Thomas Freeborn.

U. S. S. FREEBORN,
Potomac Flotilla, September 25, 1864.

SIR: In obedience to your order of the 24th instant, I proceeded on an expedition up to Stutt's Creek and succeeded in capturing one large

UNITED STATES STEAMER FUCHSIA.

launch, capable of carrying eighty men, which I presume was to be used to capture one of our vessels; also two canoes and one large seine.

Said captures I deliver to your disposition.

I am, very respectfully, your obedient servant,

WILLIAM A. ARTHUR,
Acting Master, Commanding.

Acting Master WILLIAM T. STREET,
Commanding U. S. S. Fuchsia.

Report of Commander Parker, U. S. Navy, commanding Potomac Flotilla, of the destruction of seventeen boats.

U. S. S. DON,
Potomac Flotilla, September 27, 1864.

SIR: I have the honor to report that in obedience to the order of the Department of the 1st instant I have destroyed seventeen boats on the Virginia shore opposite Charles County, Md. A company of cavalry destroyed all boats on the Maryland side of the river some ten days ago.

I am sir, very respectfully, your obedient servant,

FOXHALL A. PARKER,
Commander, Commanding Potomac Flotilla.

Hon. GIDEON WELLES,
Secretary of the Navy, Navy Department, Washington, D. C.

Report of Commander Parker, U. S. Navy, commanding Potomac Flotilla, of boats destroyed by vessels of his command.

U. S. S. DON,
Potomac Flotilla, October 4, 1864.

SIR: I have the honor to report that twenty-two of the enemy's boats were destroyed by the vessels of this flotilla during the past week.

I am, sir, very respectfully, your obedient servant,

FOXHALL A. PARKER,
Commander, Commanding Potomac Flotilla.

Hon. GIDEON WELLES,
Secretary of the Navy, Navy Department, Washington, D. C.

Report of Commander Parker, U. S. Navy, commanding Potomac Flotilla, of assistance rendered to U. S. transport steamer Nellie Pentz.

U. S. S. DON,
Rappahannock River, October 8, 1864.

SIR: I have the honor to report to the Department that on the 6th instant I fell in with, off the mouth of this river, the transport steamer *Nellie Pentz*, wallowing in the trough of the sea and apparently in a disabled condition. She was bound to City Point, and had on board a detachment of the Thirty-sixth [Thirty-ninth] New Jersey Volunteers.

Being informed by the commanding officer of the detachment, Colonel Close, that the master of the *Nellie Pentz* seemed wholly incompetent to command her, and that the engineer could not keep steam on her, sent Acting Ensign Brice on board of her, with Acting Third Assistan

Engineer Keller and Pilot Boothe, with instructions to Mr. Brice to take command of the vessel and deliver her over to the quartermaster at Fortress Monroe.

I am, sir, very respectfully, your obedient servant,

FOXHALL A. PARKER,
Commander, Commanding Potomac Flotilla.

Hon. GIDEON WELLES,
Secretary of the Navy, Navy Department, Washington, D. C.

Report of Acting Master Arthur, U. S. Navy, commanding U. S. S. Thomas Freeborn, regarding capture of a party of blockade runners.

U. S. S. THOMAS FREEBORN,
Potomac Flotilla, October 8, 1864.

SIR: I very respectfully make the following report:

Last night, at about 10 o'clock, as this vessel was cruising in the bay, I chased and picked up a canoe containing three men and one woman—Robert Crowbar, Thomas Crowbar, Samuel Swift, and Mrs. Catherer, from Virginia—bound to the eastern shore. I towed the canoe astern until 3 o'clock a. m., when the painter parted, it blowing very fresh at that time. After looking for it for some time I was obliged to give it up.

The said people are now on board this vessel, subject to your orders.

I am, very respectfully, your obedient servant,

WM. A. ARTHUR,
Acting Master, Commanding.

EDWARD HOOKER,
Acting Volunteer Lieutenant, Comdg. U. S. S. Commodore Read.

Capture and destruction of U. S. picket boat No. 2 by a party of Confederates on the Potomac River, October 8, 1864.

[Telegram.]

ST. MARY'S, *October 19, 1864.*
(Received at Washington 11:25 a. m.)

I have just learned that one of the torpedo boats of Admiral Porter's fleet ran into the Great Wicomico River some days since and was captured by the rebels. The *Commodore Read* and *Mercury* went into the river and shelled the rebels, who were forced to destroy the boat, but succeeded in getting her 12-pounder howitzer, and in taking her officers and crew, twelve in number, prisoners. I will send by letter full particulars as soon as I can ascertain them.

FOXHALL A. PARKER,
Commander, Commanding Potomac Flotilla.

Hon. GIDEON WELLES,
Secretary Navy.

Report of Acting Volunteer Lieutenant Hooker, U. S. Navy, commanding First Division Potomac Flotilla, transmitting report of Acting Ensign Nelson, U. S. Navy, commanding U. S. S. Mercury.

U. S. S. COMMODORE READ,
Off Rappahannock River, Virginia, October 19, 1864.

SIR: I herewith enclose the report of Acting Ensign Nelson, commanding the *Mercury*, upon the capture of picket boat *No. 2*, and of subsequent operations on the [Great] Wicomico River.

Having heard from shore of the capture, I proceeded to the [Great] Wicomico yesterday morning, and learned that on Monday night (subsequent to the closing of Acting Ensign Nelson's report) the enemy opened fire upon the *Mercury*, doing, however, no damage. The fire was promptly returned, and from refugees I learn resulted in killing one and wounding several. At 9.30 a. m. (18th), I went to quarters and proceeded some distance up the river, but could not bring the enemy out, although we occasionally saw a picket in the woods or undergrowth. I therefore shelled the woods on all sides for a while, and returning to the mouth of Cockle's [Cockrell] Creek, anchored, and kept strict watch to see if any one appeared. At about 1 p. m. a large body of cavalry was seen coming down the road, but they took good care to keep out of range, and finally disappeared into the woods. Still later, a picket of two men was discovered in the edge of some woods near the ship. A shell from No. 2 pivot, which was directed with admirable precision, made them leave in haste. A small force showing themselves farther up, I sent the *Mercury* to shell the woods where they were. At sunset a new set of pickets showed themselves in the woods near us. I therefore fired a few more shells into these woods. At dark I left for the Rappahannock.

The wreck of the picket boat is in sight up Rising Creek, one of the small creeks making off from the river.

Seven refugees which I picked up I sent to the provost-marshal at Point Lookout by the *Currituck*, which vessel came down in the afternoon to learn the cause of the firing. They report that the guerrillas are ordered to join the Army at Richmond; they estimate the number at from 500 to 800 in this region. They had no other news of any importance.

Very respectfully, your obedient servant,

EDWARD HOOKER, U. S. Navy,
Actg. Vol. Lieut., Comdg. First Div. Potomac Flotilla.

Commander FOXHALL A. PARKER,
Commanding Potomac Flotilla.

[Enclosure.]

U. S. S. MERCURY,
Great Wicomico River, Virginia, October 17, 1864.

SIR: I would respectfully report that about noon on the 15th instant, while cruising off the coast of Virginia, I spoke the tug *Kingfisher*, in search of a small steamer known as picket boat *No. 2*, of the North Atlantic Squadron, which had left Old Point on Saturday the 8th instant, and had not been heard of during the intervening week. I was requested by a naval officer in charge of the tug to search the coast between Windmill and Smith's points, as it was thought she had been beached on some part of that coast. Being at the time off Bluff Point, I examined the beach closely between there and the [Great] Wicomico River, but could see no trace of the steamer in question. My subsequent efforts to discover her were equally unsuccessful until this morning, when I obtained the following facts from two prisoners on board the army gunboat *General Foster*, viz: About 4:30 p. m. on Saturday, the 8th instant, the missing steamer came into the [Great] Wicomico River and anchored, but had not been there long ere the home guard, under command of Captain Covington and Lieutenants Rice and Ford, attacked her with musketry from the bank. She got underway and started to go out, but ran aground on an oyster bank. When the tide fell she was left nearly dry, and the enemy made an easy capture of both vessel and crew. The latter, including her commander,

were at once taken to Heathsville, and from thence across the Rappahannock to Richmond, while the former was stripped of everything useful about her, including a howitzer and several muskets with which she was armed; they then burned her. Her boiler and such parts of her machinery as could not easily be taken away are still there, but the hull is entirely destroyed by fire. I was also informed that the captain of the steamer, when asked by his captors what he was doing there, replied that he had mistaken the river for the Patuxent, and apprehended no danger. His name, as given to me by my informant, is Stockholm, but his rank is not known.

In addition to this I would respectfully inform you that the army gunboat *General Foster* has since last Saturday, by order of Major-General Butler, been cruising up and down the river, and on several occasions landed parties numbering from 80 to 100 men, for the purpose of arresting citizens to be held as hostages for the men lately captured belonging to the light-ship off Smith's Point. Whenever they land they meet with stout resistance from the home guard, who, numbering about 300, attacked the *General Foster* yesterday afternoon while some distance up the river and penetrated the sides of her upper works in several places. She returned the fire and killed seven of the enemy, who at once discontinued the fight, when they found their bullets, after striking the *General Foster's* iron sides, flattened and fell in the water without doing the slightest damage, as all her men were safely located behind iron plates, from whence they poured a deadly fire on the enemy. The *Foster* came down and anchored at the mouth of the river last night, and was again attacked by a party on the south bank of the river. Cruising off the mouth I heard the firing, and saw the flashes from the pieces as they were fired. I immediately stood in toward the scene of action, beat to general quarters, and cleared ship for action. When within range I fired two shells at the shore party, which had the effect of silencing their fire and compelled them to leave a chosen position on the bank.

The home guard in Northumberland County is said to number not less than 500 men, and may be collected in a body ready for service in a few hours. Westmoreland County is capable of furnishing as many more, and a force of 1,000 men well acquainted with all the roads and byways, giving them immense advantage over a force of equal numbers, can in case of emergency be raised in a very short time, as the distance between Great Wicomico and Potomac rivers does not at any point exceed 25 miles.

I have the honor to be, your very obedient servant,

THOMAS NELSON,
Acting Ensign, Commanding Mercury.

Acting Volunteer Lieutenant E. HOOKER,
Commanding First Division Potomac Flotilla.

Report of Acting Ensign Nelson, U. S. Navy, commanding U. S. S. Mercury, of a brief engagement of that vessel with a land force of the enemy.

U. S. S. MERCURY,
Rappahannock, October 18, 1864.

SIR: I would respectfully report that last night about midnight the lookout reported a signal light on the northern bank of the [Great] Wicomico River just above Cockle's [Cockrell] Creek. On closer examination I found it to be a fire just on the edge of the woods, and could see

people passing in front of it as if purposely wanting to show themselves. I at once conceived an idea that this was a plan to decoy a boat toward the shore, as I have been told by a citizen the rebels believe that a light shown from some prominent point is a signal by which refugees apprise the gunboats of their presence and desire to be taken off. Conformable to this belief, I stood in toward the bank and fired two 5-second shells at the fire, one of which exploded within 10 feet of it, and the other, passing directly over it, exploded a short distance beyond. As I had expected, three volleys of musketry, fired from three different points at the same instant, all of which fell short of the *Mercury*, was the only response on the part of the rebels, who immediately put out the fire and fled. I fired and exploded several shells in the woods whither they had gone, but saw nothing further of the enemy.

I am, very respectfully, your obedient servant,

THOMAS NELSON,
Acting Ensign, Commanding.

Acting Volunteer Lieutenant E. HOOKER, U. S. Navy,
Commanding First Division Potomac Flotilla.

Report of Acting Master Tole, U. S. Navy, commanding U. S. S. Anacostia, of the capture of two Confederates near Mathias Point, Va.

U. S. S. ANACOSTIA,
Potomac Flotilla, October 26, 1864.

SIR: I would respectfully report that from information I had received I sent my executive officer ashore with an armed boat's crew to the house of William Crange (near Mathias Point, Va.), a soldier in the Confederate Army, and succeeded in capturing him and his brother John, they being home on furlough.

John Crange being severely wounded in the leg, I paroled him. William I sent to the provost-marshal at Alexandria; also the parole of John.

I am, sir, very respectfully, your obedient servant,

JAMES C. TOLE,
Acting Master, Commanding.

Commander FOXHALL A. PARKER,
Commanding Potomac Flotilla.

Report of Acting Master Arthur, U. S. Navy, commanding U. S. S. Thomas Freeborn, regarding boat captured from Smith's Point light-ship.

U. S. S. FREEBORN,
Potomac Flotilla, October 26, 1864.

SIR: The following is a statement of a refugee in regard to the Smith's Point light-ship's boat that was captured by the rebels in the Great Wicomico and is now in the hands of two men living on Carter's Creek. Their names are as follows: Captain John Woody, Captain James Parks.

He says that the boat was purchased by these men at a public sale held at Lancaster Court-House on the 19th of last August, or thereabouts, for the sum of $3,000 in Confederate money. He further says

that they bought the boat to carry produce to Fredericksburg, as they have been engaged in that trade for a long time.

Very respectfully, your obedient servant,

WM. A. ARTHUR,
Acting Master, Commanding.

Acting Volunteer Lieutenant EDWARD HOOKER,
Comdg. First Div. Potomac Flotilla, U. S. S. Commodore Read.

Report of Commander Parker, U. S. Navy, commanding Potomac Flotilla, of the burning of three houses on Fleet's Point, Great Wicomico River, and reconnoissance in Rappahannock River.

U. S. S. DON,
Potomac Flotilla, October 28, 1864.

SIR: The houses on Heet's [Fleet's] Point, in the Great Wicomico River, Virginia, having been frequently used as a shelter by the home guards of Northumberland County from which to fire upon the boats of the blockading vessels, and two volleys of musketry having come from thence only a week ago at some officers belonging to the *Commodore Read* while engaged in fishing, I landed a small force there on the 25th instant, and burned the houses (three in number) to the ground, with their barns and outbuildings.

On the 26th and 27th instant I made a reconnoissance of the Rappahannock to within a few miles of Port Royal. On the 26th a boat belonging to this vessel was fired upon, and on the 27th several bullets from the heights above Tappahannock struck the *Yankee*. In each instance a few shell put the assailants to flight.

I have the honor to be, very respectfully, your obedient servant,

FOXHALL A. PARKER,
Commander, Commanding Potomac Flotilla.

Hon. GIDEON WELLES,
Secretary of the Navy, Navy Department, Washington, D. C.

Report of Commander Parker, U. S. Navy, commanding Potomac Flotilla, regarding capture of schooner Coquette and sloop James Landry.

U. S. S. DON,
Potomac Flotilla, November 1, 1864.

SIR: I have the honor to report to the Department the capture of the schooner *Coquette* and sloop *James Sandy* [*Landry*] by the U. S. schooner *Adolph Hugel*, Acting Master S. Nickerson, commanding, on the 26th and 28th ultimo. I forward herewith certificates of capture and prize lists.

I am, sir, very respectfully, your obedient servant,

FOXHALL A. PARKER,
Commander, Commanding Potomac Flotilla.

Hon. GIDEON WELLES,
Secretary of the Navy, Navy Department, Washington, D. C.

[Enclosure.]

Potomac Flotilla.—Certificate of capture.

Name and character of the prize.—Schooner *Coquette*, of Baltimore, trading vessel. Loading on the Maryland shore for Baltimore.

By whom and by what vessel capture made.—S. Nickerson, acting master, commanding U. S. schooner *A. Hugel.*

When capture made.—October 26, 1864.

Where and for what reasons.—In Wade's Bay, Potomac River, for having on board tobacco, in cases, which had just run the blockade from Virginia by a notorious blockade runner, who was also on board at the time, and for leaving one of the vessel's crew at Lower Cedar Point when bound up with goods brought from Baltimore to run the blockade to Virginia. This man was captured in the act by a gunboat. The captain of the vessel also acknowledged to me that the goods were brought for that purpose and the man left to carry them over.

The cargo, if any on board.—Hogsheads of tobacco, wheat, etc.; boxes and bales of Lynchburg tobacco, and $3,590.64 in paper and gold and silver.

What papers found.—Coasting license; enrollment. Had no manifest of the cargo then on board.

Remarks.—Names of men on board: J. C. Deavers, captain; J. Deavers, mate; William Anderson, seaman; Lewis Garison, seaman; J. H. Cunningham, seaman; E. Fontain, a passenger, a refugee from Virginia; James F. Welch, passenger, a notorious blockade runner from Virginia. Some of the cargo, such as sacks of flour, barrels of sugar, etc., belonged to the crew, and was brought from Baltimore on speculation.

OCTOBER 26, 1864.

I hereby certify that the above mentioned schooner, *Coquette*, was captured by the undersigned, commanding the U. S. schooner *A. Hugel*, of the Potomac Flotilla, at the time and place above designated, and that the above and annexed statement is true in every particular.

S. NICKERSON,
Acting Master, Commanding.

Potomac Flotilla.—Certificate of capture.

Name and character of the prize.—Sloop *James Landry*, coaster on the Potomac River.

By whom and by what vessel capture made.—S. Nickerson, acting master, commanding U. S. schooner *A. Hugel.*

When capture made.—October 28, 1864.

Where and for what reasons.—Off Alexandria, Va., for having cargo on board not mentioned on his manifest, also six passengers without passes and not mentioned on his manifest, also for clearing for a place after oysters where no oysters grow, and the captain acknowledged to me that his clearance was a false pretense to carry on another trade.

The cargo, if any on board.—Six passengers and several packages of shoe thread, etc.

What papers found.—License and manifest.

Remarks.—Names of persons on board: Franklin Perry, captain (colored); William Lee, passenger (colored); John Thomas, passenger (colored); John G. Harris, passenger (colored); Stephen Jordan, passenger (colored); Thomas Nevitt, passenger (colored); James Nevitt, passenger (colored). These men are nearly all in the employ of the Government and had no passes.

OCTOBER 28, 1864.

I hereby certify that the above-mentioned sloop, *James Landry*, was captured by the undersigned, commanding the U. S. schooner A. Hugel,

of the Potomac Flotilla, at the time and place above designated, and that the above and annexed statement is true in every particular.

S. NICKERSON,
Acting Master, Commanding.

Report of Commander Parker, U. S. Navy, commanding Potomac Flotilla, regarding capture of sloop Zion.

U. S. S. DON,
Potomac Flotilla, November 4, 1864.

SIR: I have the honor to report the capture of the sloop *Zion* on the morning of the 2d instant by the U. S. schooner *Adolph Hugel*, Acting Master S. Nickerson, commanding.

I transmit herewith certificate* of capture and prize list.

I am, sir, very respectfully, your obedient servant,

FOXHALL A. PARKER,
Commander, Commanding Potomac Flotilla.

Hon. GIDEON WELLES,
Secretary of the Navy, Navy Department, Washington, D. C.

Report of Commander Parker, U. S. Navy, commanding Potomac Flotilla, of the capture of two army wagons and burning of sloop Buckskin.

U. S. S. DON,
Potomac Flotilla, November 10, 1864.

SIR: I have the honor to inform the Department that on the 7th instant Acting Master Tole, commanding U. S. S. *Anacostia*, destroyed two rebel army wagons near Aquia Creek, which were used to convey blockade goods from that place to Fredericksburg, Va., and on the 9th instant burned in Chopawamsic Creek the sloop *Buckskin*, of Alexandria, which was captured about ten days since by guerrillas while anchored in the creek engaged in getting wood.

I am, sir, very respectfully, your obedient servant,

FOXHALL A. PARKER,
Commander, Commanding Potomac Flotilla.

Hon. GIDEON WELLES,
Secretary of the Navy, Navy Department, Washington, D. C.

Report of Commander Parker, U. S. Navy, commanding Potomac Flotilla, urging the necessity of increased number of vessels to insure safety to the flotilla.

U. S. S. DON,
Potomac Flotilla, November 22, 1864.

SIR: I have to report to the Department that seven of the vessels of this flotilla are now disabled, and as I learn from the provost-marshal of Baltimore that a large number of schooners trading between that port and New York will endeavor during the coming winter to land goods on the Virginia shore somewhere between the Piankatank and Potomac rivers, I would respectfully urge that a couple of good steamers capable of keeping the bay in stormy weather be added to my command at as early a date as possible.

---

* Not found.

I would also most earnestly request that two vessels of light draft, similar to the *Stepping Stones*, be sent to me, since I have it from undoubted authority that Lieutenant Beverly Kennon, of the rebel Navy, has been appointed torpedo officer for the Rappahannock and neighboring rivers, and I feel that I can insure the safety of this flotilla, and especially of the guard vessel off St. George's Island, the valuable store vessel at St. Inigoes, and the large fleet of transports frequently anchored at Point Lookout, from torpedo boats, only by constantly scouring the creeks leading from the Piankatank, Rappahannock, Great Wicomico, Little Wicomico, Coan, and Yeocomico rivers, which, with the vessels now at my disposal, I am not able to do.

I had formed the intention of attempting this with howitzer launches, but upon a reconnoissance found it to be impracticable, the banks of the creeks being lined with thickets, from which the enemy's riflemen would pick off our oarsmen with impunity.

I have the honor to be, very respectfully, your obedient servant,

FOXHALL A. PARKER,
Commander, Commanding Potomac Flotilla.

Hon. GIDEON WELLES,
Secretary of the Navy, Navy Department, Washington, D. C.

Order of the Secretary of the Navy to Commander Parker, U. S. Navy, regarding U. S. S. Stepping Stones.

NAVY DEPARTMENT, *November 25, 1864.*

SIR: The steamer *Stepping Stones*, now at the Washington navy yard, is hereby attached to the Potomac Flotilla.

Very respectfully,

GIDEON WELLES,
Secretary of the Navy.

Commander F. A. PARKER,
Commanding Potomac Flotilla, Washington.

Report of Commander Parker, U. S. Navy, commanding Potomac Flotilla, transmitting correspondence regarding the capture of a party from the U. S. S. Yankee, by Confederates near Fort Lowry, Va., November 24, 1864.

U. S. S. DON,
Potomac Flotilla, November 30, 1864.

SIR: I regret to inform the Department that on the 24th instant Acting Master G. C. Schulze, commanding U. S. S. *Yankee*, while on shore with a party of his men on a reconnoissance near Fort Lowry, on the Rappahannock River, became in some way separated from his command and fell into the hands of the enemy, who captured with him First-class Boy William Schwarzkopt. On the evening of the same day an impertinent note addressed to me was sent on board the *Yankee* from a certain Captain Roane, commanding Rappahannock District, which, with a copy of my reply, I enclose.

I have the honor, to be your obedient servant,

FOXHALL A. PARKER,
Commander, Commanding Potomac Flotilla.

Hon. GIDEON WELLES,
Secretary of the Navy.

[Enclosures.]

SIR: If any private property is destroyed by men of your command in the district which I have the honor to command the prisoners captured by me this evening will be made to suffer for it.

Very respectfully, your obedient servant,

L. D. ROANE,
Captain, Commanding Rappahannock District.

Commander F. A. PARKER,
Commanding Potomac Flotilla.

U. S. S. DON,
Off Tappahannock, Va., November 30, 1864.

SIR: In reply to your communication of the 24th instant, just received, I have to inform you that the property of unoffending citizens on the rivers blockaded by the squadron under my command will continue to be respected by me in the future as it has been in the past.

When, however, private dwellings are used by rebels as a shelter from which to fire at my boats, as was the case not long since in the Great Wicomico and on this river at a point not far below here, which I presume to be within the district which you have the honor to command, I shall, undeterred by your threat, burn them to the ground, well knowing that the Government will sustain me in so doing, and will not fail to retaliate upon the person of two prisoners in its possession, of equal rank and condition, any barbarities which inhumanity may prompt you to inflict, in consequence of my acts, upon Acting Master Schulze and the lad, William Schwartzkopt, now in your power; and on my own part, I do assure you that should any harm befall either of them through your instrumentality, I will not leave a house standing on either bank of this river from Port Royal to its mouth.

In conclusion, you must pardon me for expressing the conviction that the fortunes of the Confederacy must be at a very low ebb, and its military in a most disorganized condition, when a captain in its service arrogates to himself the right to dispose of its prisoners of war as in his judgment he may think proper.

I have the honor to be, your obedient servant,

FOXHALL A. PARKER,
Commander, Commanding Potomac Flotilla.

Captain L. D. ROANE,
Commanding Rappahannock District.

Order of the Secretary of the Navy to the commandant naval station, Baltimore, regarding U. S. S. Morse.

NAVY DEPARTMENT, *December 6, 1864.*

SIR: Direct the U. S. S. *Morse* to proceed to St. Mary's, Md., and report to Commander F. A. Parker for duty in the Potomac Flotilla.

Very respectfully, etc.,

GIDEON WELLES,
Secretary of the Navy.

Commodore T. A. DORNIN,
Commanding Naval Station, Baltimore.

Order of the Secretary of the Navy to Captain Kilty, U. S. Navy, commanding U. S. S. Roanoke, in view of the rumored preparation of torpedoes by the enemy.

NAVY DEPARTMENT, *December 9, 1864.*

SIR: I transmit herewith a copy of a communication* addressed to Major-General Augur by General Barnes, commanding at Point Lookout, and referred to this Department, relative to the rumored preparation of torpedoes to attack the *Roanoke*. It behooves you to be on your guard and to adopt every precaution against surprise or injury from the source indicated.

Very respectfully, etc.,

GIDEON WELLES,
Secretary of the Navy.

Captain A. H. KILTY,
Commanding U. S. S. Roanoke, Point Lookout, Md.

Letter from the Secretary of the Navy to Commander Parker, U. S. Navy, regarding U. S. S. Periwinkle.

NAVY DEPARTMENT, *December 17, 1864.*

SIR: The U. S. S. *Periwinkle*, at Philadelphia, has been ordered to proceed to St. Mary's and report for duty in the Potomac Flotilla.

Very respectfully, etc.,

GIDEON WELLES,
Secretary of the Navy.

Commander F. A. PARKER,
Commanding Potomac Flotilla, Washington.

Report of Commander Parker, U. S. Navy, commanding Potomac Flotilla, of the destruction of boats and scows massed by the Confederates on Coan River.

U. S. S. DON,
Potomac Flotilla, December 19, 1864.

SIR: Learning from the provost-marshal of Baltimore that the enemy were massing boats on Coan River for the purpose of making a raid on the bay, I sent the *Cœur de Lion* and *Mercury* thither on the 15th instant, under the command of Acting Master Morris, who found collected thirty-one large boats and two scows, all of which he destroyed. The home guards, in large force, made a show of resistance, but were quickly driven off.

A suit of schooner's sails was captured, which I shall use in the flotilla.

I have the honor to be, your obedient servant,

FOXHALL A. PARKER,
Commander, Commanding Potomac Flotilla.

Hon. GIDEON WELLES,
Secretary of the Navy.

---

*Not found.

Semimonthly statement of vessels in the Potomac Flotilla.

U. S. S. DON,
Potomac Flotilla, January 1, 1865.

Name.	Guns.	Class.	Commanding officer.	Present duty or station.
Anacostia	4	Screw	Acting Master J. C. Tole	Off Rappahannock River.
Jacob Bell	4	Side wheel	Acting Volunteer Lieutenant H. J. Coop.	In Potomac River.
William Bacon	4	Schooner	Acting Master S. Haines	Guard vessel off St. George's Island.
Currituck	5	Screw	Acting Ensign E. P. Peterson	Repairing at the Washington navy yard.
Cœur de Lion	3	Side wheel	Acting Master W. G. Morris	In Potomac River.
Don	6	Screw	Lieutenant-Commander T. H. Eastman.	Cruising in Chesapeake Bay and Potomac River.
Dragon	2	do	Acting Ensign I. Hallock	In Potomac River.
Ella		Side wheel	Acting Master H. O. Stone	Dispatch boat.
Eureka	1	Screw	Acting Ensign S. W. Ward	St. Inigoes.
Fuchsia	6	do	Acting Master W. T. Street	Point Lookout.
Freeborn	3	Side wheel	Acting Master W. A. Arthur	Repairing at Washington navy yard.
Adolph Hugel	4	Schooner	Acting Master S. Nickerson	Guard vessel off Alexandria.
Morse	6	Side wheel	Acting Master G. W. Hyde	Off Rappahannock River.
Mercury	2	do	Acting Master T. Nelson	Off Great Wicomico River.
Primrose	2	Screw	Acting Ensign S. Owen	In Potomac River.
Periwinkle				Not yet reported.
Commodore Read	6	Side wheel	Acting Volunteer Lieutenant E. Hooker.	Repairing at the navy yard, Washington.
Resolute	2	Screw	Acting Ensign E. K. Howland.	Do.
Rescue	1	do	Acting Ensign W. F. Hodgkinson.	In Potomac River.
Stepping Stones	5	Side wheel	Acting Master E. A. Roderick	Repairing at the navy yard, Washington.
Teaser	2	Screw	Acting Ensign B. Walker	In Potomac River.
Verbena	2	do	Acting Ensign J. A. Havens	Tender to the ironclad Roanoke at Point Lookout.
Wyandank	2	Storeship	Acting Master J. Taylor	Storeship at St. Inigoes.
Yankee	4	Side wheel	Acting Master L. G. Cook	Off Rappahannock River.

Very respectfully, sir, your obedient servant,

FOXHALL A. PARKER,
Commander, Commanding Potomac Flotilla.

Hon. GIDEON WELLES,
Secretary of the Navy,

Report of Commander Parker, U. S. Navy, regarding U. S. steamers Morse and Periwinkle.

U. S. S. DON,
Potomac Flotilla, January 1, 1865.

SIR: I have the honor to report that the U. S. steamers *Morse* and *Periwinkle* have reached here and will be sent to the Rappahannock.

I am, sir, very respectfully, your obedient servant,

FOXHALL A. PARKER,
Commander, Commanding Potomac Flotilla.

Hon. GIDEON WELLES,
Secretary of the Navy.

Order of the Secretary of the Navy to Acting Volunteer Lieutenant Garfield, U. S. Navy, regarding U. S. S. Banshee.

NAVY DEPARTMENT, *January 3, 1865.*

SIR: Proceed with the U. S. S. *Banshee* to St. Mary's, Md., and report to Commander F. A. Parker for duty in the Potomac Flotilla.

Very respectfully, etc.,

GIDEON WELLES,
Secretary of the Navy.

Acting Volunteer Lieutenant W. H. GARFIELD,
Commanding U. S. S. Banshee, Norfolk.

[Telegram.]

ST. INIGOES, MD., *January 4, 1865.*
(Received at Washington 6:50 p. m.)

Will you please give an order to work day and night on the vessels of the flotilla at the navy yard. I need them. The rebels are up to some deviltry on the Rappahannock. I captured there this morning two barrels of powder and two torpedoes, and I learn from various sources that a torpedo expedition is being organized for an attack in this quarter.

FOXHALL A. PARKER,
Commander, Commanding Potomac Flotilla.

Hon. G. V. FOX,
Assistant Secretary of the Navy.

Report of Commander Parker, U. S. Navy, commanding Potomac Flotilla, of the capture of powder and torpedoes on the Rappahannock River.

U. S. S. DON,
Potomac Flotilla, January 4, 1865.

SIR: I have the honor to report to the Department that I landed this morning a party of seamen, under the command of Acting Master Tole, on the right bank of the Rappahannock, about 6 miles from its mouth, and captured two barrels of powder and two torpedoes, which I had been informed were collected there.

I regret to add that the rebels who were in charge of them got away from us.

I am, sir, very respectfully, your obedient servant,

FOXHALL A. PARKER,
Commander, Commanding Potomac Flotilla.

Hon. GIDEON WELLES,
Secretary of the Navy.

[Telegram.]

NAVY DEPARTMENT, *January 4, 1865.*

Hasten the repairs of the vessels of the Potomac Flotilla, the vessels being much wanted. Has the *Sophronia* sailed?

GIDEON WELLES,
Secretary.

Commodore J. B. MONTGOMERY,
Commandant Navy Yard, Washington, D. C.

[Telegram.]

NAVY DEPARTMENT, *January 4, 1865.*

Report at Washington with the *Don.*

GIDEON WELLES,
Secretary of the Navy.

Commander F. A. PARKER,
Commanding Potomac Flotilla, St. Inigoes, St. Mary's County, Md.

[Telegram.]

ST. INIGOES, *January 4, 1865.*
(Received at Washington 6:55 p. m.)

Telegram just received. Will leave immediately for Washington.

F. A. PARKER,
Commander, Commanding Potomac Flotilla.

Hon. G. V. FOX,
Assistant Secretary of Navy.

[Telegram.]

NAVY DEPARTMENT, *January 5, 1865.*

Consult with military authorities and give your opinion as to withdrawal of *Roanoke.*

By order Secretary:

G. V. FOX,
Assistant Secretary.

Capt. A. H. KILTY,
Commanding Ironclad Roanoke, Point Lookout, Md.

[Telegram.]

NAVY DEPARTMENT, *January 6, 1865.*

Rear-Admiral Porter reports that he has information that an organized plan is nearly ready for execution to attack your vessel at night with torpedoes. Take care that the *Roanoke* is protected by means that will prevent a boat reaching the ship at night.

GIDEON WELLES,
Secretary of the Navy.

Capt. A. H. KILTY,
Commanding Ironclad Roanoke, Point Lookout, Md.

Letter from the Secretary of the Navy to Commander Parker, U. S. Navy, commanding Potomac Flotilla, transmitting information from U. S. consul at Toronto, Canada.

NAVY DEPARTMENT, *January 9, 1865.*

SIR: I enclose herewith a copy of an important dispatch, dated the 3d instant, addressed to the Secretary of State by the U. S. consul at Toronto and communicated to this Department, giving information in regard to a plan which the insurgents have of sending and receiving dispatches, their messengers crossing the Potomac in the vicinity of Port Tobacco.

Very respectfully, etc., GIDEON WELLES,
Secretary of the Navy.

Commander FOXHALL A. PARKER,
Commanding Potomac Flotilla, Washington.

[Enclosure.]

U. S. CONSULATE,
Toronto, Canada West, January 3, 1865.

SIR: The following facts having been given to me, I hasten to transmit them directly to you without losing the several days' time necessary to occupy by sending through the consul-general. I shall, however, enclose him a copy. I am not informed of the names of parties interested, only their initials, which I give as I receive them.

The rebels in this city have a quick and successful communication with Jeff Davis and the authorities in Richmond in the following manner: Having plenty of money at their command, they employ British subjects, who are provided with British passports and also with passports from Colonel ——— (probably Jacob Thompson), which are plainly written, name and date of issue, on fine silk, and are ingeniously secreted in the lining of the coat. They carry dispatches, which are made and carried in the same manner. These messengers wear metal buttons, upon the inside of which dispatches are most minutely photographed, not perceptible to the naked eye, but are easily read by the aid of a powerful lens. Letters are written but are closely interlined with imperceptible ink (as they term it) to which when a certain chemical is applied, is easily deciphered. The messenger arriving at Baltimore receives additional instructions from "B——," and proceeds to Washington; here he undergoes a thorough examination, is searched and permitted to pass. He takes a southeasterly direction to Port Tobacco, where he is sheltered by a widow, "Mrs. F——," and at dead of night crosses in an india-rubber boat to the south side of the Potomac; thence he goes to Bowling Green, where his rebel passport is used to "Guerrilla B——," who hastens him on to Richmond. He returns by the same route. The last trip was made in fourteen days (December 14 to 28). Boxes are received from Port Tobacco marked "Mineral specimens," with dispatches secreted in the lining.

This information is reliable—from a person who has seen the dispatches and has personal knowledge of the facts. I hope to be able to get information more fully, names, and when the next messenger leaves, etc., which I shall lose no time in communicating to the Department.

I have the honor to be, sir, very respectfully, your obedient servant,
R. J. KIMBALL,
U. S. Consular Agent.

Hon. WM. H. SEWARD,
Secretary of State, Washington, D. C.

Report of Captain Kilty, U. S. Navy, commanding U. S. S. Roanoke, regarding preparation for the protection of that vessel from torpedoes.

U. S. IRONCLAD ROANOKE,
Point Lookout, January 9, 1865.

SIR: I have the honor to inform the Department that for the past week I have been endeavoring to place this ship in a condition to frustrate any attempt to injure her by means of torpedoes, and that I now consider her defenses as strong as with the limited means at hand they could be made.

Having obtained timber on shore by permission of General Barnes, who also furnished transportation for it, I have placed it in the shape of spars strongly secured athwart the deck, and hung to their ends, extending 20 feet beyond the ship, a heavy rope net, which is kept steady by the stream chain, running round the lower edge under water. The ship is completely enclosed by this net, and our howitzers, I think, could be effectively used against any boat that should attempt to reach the ship, before it could possibly attain that object. The guns are manned, and a strict watch kept throughout the night; and as Commander Parker has placed two vessels to guard the creeks immediately opposite to Point Lookout, and one to cruise between Smith's Point and this ship, I do not see that more can be done to prevent the operations of torpedo boats in this quarter. The Department will have seen, however, from the report of Chief Engineer Fithian, that the *Roanoke* can not be kept at this point much longer, and, to the defects therein mentioned, I would add that her galley is nearly worn out, and must shortly undergo a thorough repair, or be replaced by a new one.

I can not close this communication without stating that I feel much indebted to Brigadier-General Barnes for the ready and cordial manner in which on this, as on all other occasions, he has cooperated with me.

I am, very respectfully, your obedient servant,

A. H. KILTY,
Captain.

Hon. GIDEON WELLES,
Secretary of the Navy, Washington, D. C.

Letter from the Secretary of the Navy to Captain Kilty, U. S. Navy, commanding U. S. S. Roanoke, regarding rumored plan for the destruction of that vessel by torpedoes.

NAVY DEPARTMENT, *January 9, 1865.*

SIR: Some weeks since the Department wrote to you in reference to a movement reported on foot to destroy the *Roanoke* by torpedoes. From a dispatch just received from Rear-Admiral Porter it would seem that such a movement is actually contemplated. He says he learns that boats are to be carried across the country to the Wicomico or other branches of the Potomac, for the purpose of attacking the *Roanoke* at night with torpedoes. In view of these reports it behooves you to neglect no preparation or plan for preventing the insurgents from accomplishing their nefarious object.

Very respectfully, etc.,

GIDEON WELLES,
Secretary of the Navy.

Captain A. H. KILTY,
Commanding U. S. S. Roanoke, Point Lookout, Md.

Letter from the Secretary of the Navy to Commander Parker, U. S. Navy, commanding Potomac Flotilla, regarding plan for the destruction of U. S. S. Roanoke by torpedoes.

NAVY DEPARTMENT, *January 9, 1865.*

SIR: From dispatches captured from the rebels it is ascertained that a plan is on foot to blow up or sink the *Roanoke*. It is proposed to carry boats across the country to the Wicomico or other branches of the Potomac and attack the *Roanoke* at night. Captain Kilty has been advised of this design and enjoined to make preparations against it, but it is important that the Wicomico should be closely watched, as well as other branches of the Potomac in that vicinity, by the flotilla under your command.

Very respectfully, etc.,

GIDEON WELLES,
Secretary of the Navy.

Commander F. A. PARKER,
Commanding Potomac Flotilla, Washington.

Letter from the Secretary of the Navy to Commander Parker, U. S. Navy, regarding U. S. S. Banshee.

NAVY DEPARTMENT, *January 9, 1865.*

SIR: The U. S. S. *Banshee*, Acting Volunteer Lieutenant Walter H. Garfield, has been ordered from Norfolk to St. Marys, Md., to report for duty in the Potomac Flotilla.

Very respectfully, etc.,

GIDEON WELLES,
Secretary of the Navy.

Commander F. A. PARKER,
Commanding Potomac Flotilla, Washington.

Report of Captain Kilty, U. S. Navy, commanding U. S. S. Roanoke, requesting additional howitzers in view of anticipated attack upon that vessel.

U. S. IRONCLAD ROANOKE,
Point Lookout, January 11, 1865.

SIR: I have the honor to acknowledge your letter of the 9th instant, advising me of the receipt of a dispatch from Rear-Admiral Porter, having reference to a contemplated attack on this ship by rebel torpedo boats.

You will have learned from my letter of the same date (No. 2) that I have made every possible preparation for such an event, but as I shall be obliged to rely chiefly upon my howitzers as a repelling force at close quarters, and I have but three, it would be advisable, I think, if the ship is to remain here, to supply me with three more, namely, two smoothbore and one rifle 12-pounder howitzers, with field carriages. Should the Department determine to send the ship to Norfolk, as suggested by Chief Engineer Fithian, it would be necessary for her to get into dock, as her bottom is very foul and her pump valves partially obstructed.

I am, with great respect, your obedient servant,

A. H. KILTY,
Captain.

Hon. GIDEON WELLES,
Secretary of the Navy, Washington, D. C.

[Telegram.]

CITY POINT, *January 13, 1865—4:10 p. m.*
(Received at Washington 4:15 p. m.)

Just down from Aiken's. Shall I wait longer?

F. A. PARKER,
Commanding U. S. S. Don.

Hon. G. V. FOX,
Assistant Secretary Navy.

Semimonthly statement of vessels of the Potomac Flotilla.

POTOMAC FLOTILLA, *January 15, 1865.*

Name.	Guns.	Class.	Commanding officer.	Present duty or station.
Anacostia	4	Screw	Acting Master Tole	Rappahannock River.
William Bacon	4	Schooner	Acting Master Haines	Mouth of St. Mary's.
Jacob Bell	4	Paddle wheel	Acting Volunteer Lieutenant Coop.	Under repairs, St. Inigoes.
Banshee	5	do	Acting Volunteer Lieutenant Garfield.	Coan and Yeocomico rivers.
Cœur de Lion	3	do	Acting Master Morris	Do.
Currituck	5	Screw	Acting Ensign Ainsworth	Under repairs, navy yard.
Dragon	2	do	Acting Ensign Hallock	Yeocomico River.
Don	6	do	Lieutenant-Commander Eastman.	Flagship.
Ella		Paddle wheel	Acting Master Stone	Dispatch boat.
Eureka	2	Screw	Acting Ensign Ward	St. Inigoes Creek.
Freeborn	3	Paddle wheel	Acting Master Arthur	Rappahannock.
Fuchsia	6	Screw	Acting Master Street	Point Lookout.
Adolph Hugel	3	Schooner	Acting Master Nickerson	Potomac River.
Juniper	2	Screw	Acting Ensign Sheridan	Under repairs, navy yard.
Mercury	2	Paddle wheel	Acting Ensign Nelson	Wicomico.
Morse	6	do	Acting Master Hyde	Rappahannock River.
Primrose	2	do	Acting Master Owen	Potomac River.
Periwinkle	2	Screw	Acting Master Macy	New River.
Commodore Read		Paddle wheel	Lieutenant Hooker	Under repairs, navy yard.
Resolute	2	Screw	Acting Ensign Howland	Potomac River.
Rescue	1	do	Acting Ensign Barrett	St. Mary's River.
Stepping Stones	5	Paddle wheel	Acting Master Roderick	Under repairs, navy yard.
Teaser	2	Screw	Acting Ensign Walker	Under repairs, St. Inigoes.
Verbena	2	do	Acting Ensign Havens	Point Lookout.
Wyandank	2	Paddle wheel	Acting Master Taylor	Storeship, St. Inigoes.
Yankee	4	do	Acting Master Cook	Rappahannock.

FOXHALL A. PARKER,
Commander, Commanding Potomac Flotilla.

Hon. GIDEON WELLES,
Secretary of Navy.

Report of Commander Parker, U. S. Navy, commanding Potomac Flotilla, regarding plan of the Confederates for the destruction of U. S. S. Roanoke.

U. S. S. DON,
Potomac Flotilla, January 16, 1865.

SIR: I have the honor to acknowledge the receipt of your letter of the 9th instant, in relation to the plan of the rebels to blow up the *Roanoke*, and report that I have for some time past had two vessels

cruising off the mouth of the Wicomico and two off the mouth of the Coan and Yeocomico rivers, the direction from which I should expect the attack.

I am, sir, very respectfully, your obedient servant,

FOXHALL A. PARKER,
Commander, Commanding Potomac Flotilla.

Hon. GIDEON WELLES,
Secretary of the Navy.

Report of Commander Parker, U. S. Navy, regarding U. S. S. Banshee.

U. S. S. DON,
Potomac Flotilla, January 16, 1865.

SIR: I have the honor to report that the U. S. S. *Banshee* has reported for duty in the Potomac Flotilla.

I am, sir, very respectfully, your obedient servant,

FOXHALL A. PARKER,
Commander, Commanding Potomac Flotilla.

Hon. GIDEON WELLES,
Secretary of the Navy.

Order of Commander Parker, U. S. Navy, to Lieutenant-Commander Eastman, U. S. Navy, for transportation of Mr. Blair.

U. S. S. DON,
Potomac Flotilla, January 20, 1865.

SIR: You will proceed to Aiken's Landing [James River] with Mr. Blair on board and wait until he is ready to return.

FOXHALL A. PARKER,
Commander, Commanding Potomac Flotilla.

Lieutenant-Commander T. H. EASTMAN,
Commanding U. S. S. Don.

Detailed report of Lieutenant-Commander Eastman, U. S. Navy, commanding U. S. S. Don, of the cruise of that vessel in obedience to Department orders.

U. S. S. DON,
Annapolis, Md., January 28, 1865.

SIR: In obedience to your order of the 20th instant, I proceeded to Aiken's Landing on the James River and landed Mr. Blair, reported to Commander W. A. Parker, senior naval officer present, and showed him my orders.

It being rumored that the rebel rams were coming down the river, I rigged the torpedo to the bow of the *Don* and kept her ready to run into the first one that came in sight, believing I should be able to sink her or run her aground.

On the afternoon of the 23d I was ordered by Commander W. A. Parker to communicate with Rear-Admiral D. D. Porter "wherever he may be found," and hand him a letter.

I immediately got underway, and on the 24th instant reported to Commodore Lanman, senior naval officer at Hampton Roads, who sent the letter I carried to Admiral D. D. Porter at Wilmington [N. C.], by the U. S. S. *Fort Jackson.*

Commodore Lanman then ordered me to Norfolk to report to Commodore William Radford, commanding U. S. S. *Ironsides*, and to tell him to proceed up James River with the *Ironsides*. I hastened to Norfolk and reported to Commodore Radford, who ordered me to remain near him and follow the *Ironsides* up James River, which order I obeyed, the *Ironsides* and *Don* arriving at Bermuda Hundred on the morning of the 26th.

On the evening of the 26th, while waiting for permission to return to the Potomac, as General Grant had sent me word that Mr. Blair had returned, I received an order from Commodore Radford to be ready to take Vice-Admiral Farragut to Washington.

Soon after Vice-Admiral Farragut came on board, and at early daylight I started down the James River, and on the evening of the 28th arrived at Annapolis, when the admiral left the ship without giving me further orders.

I immediately reported to you by telegraph and informed you that I am in want of coal, and by the 4th of February will want provisions.

I stopped at Point Lookout a few hours and learned that there was no coal at St. Inigoes, but General Barnes kindly gave me coal enough to bring the admiral to Annapolis.

I also report that at Norfolk the port anchor hooked in some obstruction, and, after working for an hour and a half, found it was a heavy anchor and cable which had been probably stretched across the river by the rebels. I slipped and buoyed my chain at the 15-fathom shackle and reported the fact to Commodore Godon, U. S. S. *Susquehanna*, as I had not time to remain and clear the obstruction.

Respectfully,

T. H. EASTMAN,
Lieutenant-Commander, U. S. Navy.

Commander F. A. PARKER,
Commanding Potomac Flotilla.

[Telegram.]

ST. INIGOES, *January 24, 1865.*

By orders of the commander, you will place your vessel near the *Roanoke*, and remain there until further orders, with just sufficient steam to go ahead at a moment's warning. Send *Dragon* to Rappahannock, to report to Captain Hayden [Hyde?] to give up cruising with the vessels under his command and economize in every way in coal. Those who have coal must share with those who have none. I will send his coal as soon as we can. Be vigilant and be ready to go ahead at a moment's warning.

Send the *Dragon* here as soon as she returns from the Rappahannock.

JAMES TAYLOR,
Commanding Officer.

Captain W. TELL STREET.

Letter from Brigadier-General Barnes, U. S. Army, commanding District of St. Mary's, to Acting Master Street, U. S. Navy, commanding U. S. S. Fuchsia, transmitting statements of refugee regarding Confederate affairs.

HEADQUARTERS DISTRICT OF ST. MARY'S,
Point Lookout, Md., January 26, 1865.

CAPTAIN: I transmit to you for the information of the commanding officer the following statement made by a refugee, James Brier, an

Englishman. Says he was a conductor on the Virginia Central Railroad, a station agent at Richmond, Va., in the freight establishment, five years, as conductor four years, and sometimes ran an engine:

Left Richmond 9th January; was sent down the northern neck with two wagons by the railroad company to buy pork for the company at 12½ cents in gold. Bought 35,000 pounds; it was sent to Richmond; came back for the remainder, and took that opportunity to leave them; pay due me. Five hundred persons, Confederates, came over with a blockade runner named Gibson; lives at Pratt street, Baltimore; a short man; expects to go back in about one month; and a rebel captain, who was going to the eastern shore; don't know his name, but think it was Chandler; a tall man, quite gray, but says he was only 23 years of age.

I went to Leonardtown and gave myself up to Captain Buckley. Mosby's men are preparing to make a raid; getting boats from Richmond with a view of capturing some of the schooners about St. Mary's River, on the Potomac, and some of the tugs; about 400 or 500 men; a lieutenant-colonel is commanding. They meet as follows: One company at Hague, in Westmoreland County; one company at Heathsville, in Northumberland County; one company at Warsaw, in Richmond County; one company at Lancaster Court-House, in Lancaster County. They have battalion drill about once in three weeks. They live in numbers of three or four at the different farm houses. Willoughby Newton has the largest number at his house. He has a large quantity of pork; has killed 100 or 125 hogs certain; is not through yet. The expedition will be ready as soon as the boats from Richmond arrive. Expects to start from Port Jerick [Poor Jack?] Creek, in Westmoreland County, opposite Breton's Bay. The citizens are not in favor of it.

Respectfully, your obedient servant,

JAMES BARNES,
Brigadier-General, Commanding.

Captain STREET, U. S. Navy,
Commanding U. S. S. Fuchsia.

Report of Acting Master Street, U. S. Navy, regarding U. S. S. Roanoke.

U. S. S. FUCHSIA,
Off Point Lookout, January 26, 1865.

SIR: The U. S. ironclad *Roanoke* left this point at 10 a. m. for Hampton Roads, Va.

I am, sir, very respectfully, your obedient servant,

WM. TELL STREET,
Acting Master, Commanding Fuchsia.

Hon. GIDEON WELLES,
Secretary of the Navy.

Order of the Secretary of the Navy to Commander Parker, U. S. Navy, commanding Potomac Flotilla, regarding limits of command.

NAVY DEPARTMENT, *January 31, 1865.*

SIR: The limits of the Potomac Flotilla are hereby extended to and will embrace Back River, Virginia, and your command will include all the vessels at present on duty within those limits.

Very respectfully, etc.,

GIDEON WELLES,
Secretary of the Navy.

Commander F. A. PARKER,
Commanding Potomac Flotilla, Washington.

Semimonthly statement of vessels of the Potomac Flotilla.

POTOMAC FLOTILLA, *February 1, 1865.*

Name.	Guns.	Class.	Commanding officer.	Present duty or station.
Anacostia	4	Screw	Acting Master Tole	Rappahannock River.
William Bacon	4	Schooner	Acting Master Haines	Mouth of St. Mary's River.
Jacob Bell	4	Paddle wheel	Acting Volunteer Lieutenant Coop.	Potomac River.
Banshee	5	do	Acting Ensign Gibson	Coan and Yeocomico rivers
Cœur de Lion	3	do	Acting Master Morris	Under repairs, navy yard.
Currituck	5	Screw	Acting Ensign Ainsworth	Do.
Dragon	2	do	Acting Ensign Hallock	Yeocomico River.
Don	6	do	Lieutenant-Commander Eastman.	Flagship.
Ella		Paddle wheel	Acting Master Stone	Dispatch boat.
Eureka	2	Screw	Acting Ensign Ward	St. Inigoes Creek.
Freeborn	3	Paddle wheel	Acting Master Arthur	Rappahannock River.
Fuchsia	6	Screw	Acting Master Street	Point Lookout.
Adolph Hugel	3	Schooner	Acting Master Nickerson	Potomac River.
Heliotrope	1	Paddle wheel	Acting Ensign and Pilot Griffin	St. Inigoes Creek.
Juniper	2	Screw	Acting Ensign Sheridan	Potomac River.
Mercury	2	Paddle wheel	Acting Ensign Nelson	Wicomico River.
Morse	6	do	Acting Master Hyde	Rappahannock River.
Primrose	2	Screw	Acting Ensign Owen	Potomac River.
Periwinkle	2	do	Acting Master Macy	New River.
Commodore Read	6	Paddle wheel	Acting Volunteer Lieutenant Hooker.	Under repairs, navy yard.
Resolute	2	Screw	Acting Ensign Howland	Potomac River.
Rescue	1	do	Acting Ensign Barrett	St. Mary's River.
Stepping Stones	5	Paddle wheel	Acting Master Roderick	Under repairs, navy yard.
Teaser	2	Screw	Acting Ensign Walker	Potomac River.
Verbena	2	do	Acting Ensign Havens	Point Lookout.
Wyandank	2		Acting Master Taylor	Storeship, St. Inigoes.
Yankee	4	Paddle wheel	Acting Master Cook	Rappahannock River.

FOXHALL A. PARKER,
Commander, Commanding Potomac Flotilla.

Hon. GIDEON WELLES,
Secretary of the Navy.

[Telegram.]

NAVY DEPARTMENT, *February 10, 1865.*

It is reported that rebels will attempt to destroy Wolf Trap and other lights on Chesapeake.

GIDEON WELLES,
Secretary of the Navy.

Commander F. A. PARKER,
Commanding Potomac Flotilla, U. S. S. Don, Washington.

[Telegram.]

WASHINGTON NAVY YARD, *February 10, 1865.*
(Received at Washington 6:20 p. m.)

Dispatch received. Will send boats at once to look out for light-boats.

F. A. PARKER,
Commander.

Hon. GIDEON WELLES,
Secretary of Navy.

Order of Commander Parker, U. S. Navy, commanding Potomac Flotilla, to Acting Volunteer Lieutenant-Commander Hooker, U. S. Navy, commanding First Division, to protect Wolf Trap light-boat.

U. S. S. DON,
Potomac Flotilla, February 11, 1865.

SIR: Proceed to the Rappanannock and resume your duties on that station, including within your jurisdiction the coast as far south as the Wolf Trap light-boat, to which you will be careful to give ample protection.

Send one of your boats to the eastern shore for the protection of its light-houses, for which purpose the commanding officer must put himself in communication with the military authorities. Do not allow the Rappahannock to be ascended higher than Urbana, and avoid all appearance of a reconnoissance of that river.

I am, respectfully, yours,

FOXHALL A. PARKER,
Commander, Commanding Potomac Flotilla.

Acting Volunteer Lieutenant-Commander HOOKER,
Commanding U. S. S. Commodore Read.

Report of Acting Ensign Nelson, U. S. Navy, commanding U. S. S. Mercury, regarding cruise for the protection of light-boat off Smith's Point.

U. S. S. MERCURY,
Off Smith's Point, Va., February 14, 1865.

SIR: I would respectfully report that a full month since the date of last cleaning of the *Mercury's* boilers expires to-morrow, the 15th instant.

I would also report that I received an order (a copy of a telegraph dispatch signed F. A. P.) on the 12th instant, requiring me to cruise by the light vessel off Smith's Point as a protection to her.

The rebel cavalry has been down on the neck close to the bay shore and taken away several horses from Union people living there, but I am informed have gone back to headquarters again.

Amount of coal on hand, 22 tons, which, at this rate of consumption, will last me eight days from date. I shall not leave my station to communicate within that time, unless ordered to do so. No countersigns have been furnished me for February.

I am, very respectfully, your obedient servant,

THOMAS NELSON,
Acting Ensign, Commanding.

Acting Master G. W. HYDE,
Comdg. Rappahannock and Wicomico Blockading Fleet,
U. S. S. Morse.

Order of the Secretary of the Navy to Commodore Radford, U. S. Navy, regarding U. S. S. Delaware.

NAVY DEPARTMENT, *February 14, 1865.*

SIR: If the *Delaware* (fourth rate) can be spared from the flotilla on James River, order her to report to the commanding officer of the Potomac Flotilla.

Very respectfully,

GIDEON WELLES,
Secretary of the Navy.

Commodore WM. RADFORD,
Commanding James River Flotilla, James River, Virginia.

Semimonthly statement of vessels of the Potomac Flotilla.

POTOMAC FLOTILLA, *February 15, 1865.*

Name.	Guns.	Class.	Commanding officer.	Present duty or station.
Anacostia	4	Screw	Acting Master Tole	Rappahannock River.
William Bacon	4	Schooner	Acting Master Haines	Mouth of St. Mary's River.
Jacob Bell	4	Paddle wheel	Acting Volunteer Lieutenant Coop.	Potomac River.
Banshee	3	do	Acting Ensign Greene	Under repairs, navy yard.
Cœur de Lion	3	do	Acting Master Morris	Do.
Currituck	5	Screw	Acting First Assistant Engineer Clum, in charge.	Do.
Dragon	2	do	Acting Ensign Walker	Yeocomico River.
Don	6	do	Lieutenant-Commander Eastman.	Flagship.
Ella		Paddle wheel	Acting Master Stone	Dispatch boat.
Eureka	2	Screw	Acting Ensign Ward	St. Inigoes Creek.
Freeborn	3	Paddle wheel	Acting Master Arthur	Rappahannock River.
Fuchsia	6	Screw	Acting Master Street	Point Lookout.
Adolph Hugel	3	Schooner	Acting Master Nickerson	Potomac River.
Heliotrope	1	Paddle wheel	Acting Ensign and Pilot Griffin	St. Inigoes Creek.
Juniper	2	Screw	Acting Ensign Sheridan	Potomac River.
Mercury	2	Paddle wheel	Acting Ensign Nelson	Wicomico.
Morse	6	do	Acting Master Hyde	Rappahannock River.
Primrose	2	Screw	Acting Ensign Owen	Potomac River.
Periwinkle	2	do	Acting Master Macy	New River.
Commodore Read	6	Paddle wheel	Acting Volunteer Lieutenant-Commander Hooker.	Rappahannock River.
Resolute	2	Screw	Acting Ensign Gibson	Potomac River.
Rescue	1	do	Acting Ensign Barrett	St. Mary's River.
Stepping Stones	5	Paddle wheel	Acting Master Roderick	Under repairs, navy yard.
Teaser	2	Screw	Acting Ensign Potter	Potomac River.
Verbena	2	do	Acting Ensign Havens	Point Lookout.
Wyandank	2		Acting Master Taylor	Storeship, St. Inigoes.
Yankee	4	Paddle wheel	Acting Master Cook	Rappahannock River.

FOXHALL A. PARKER,
Commander, Commanding Potomac Flotilla.

HON. GIDEON WELLES,
Secretary of the Navy.

Report of Acting Ensign Nelson, U. S. Navy, commanding U. S. S. Mercury, of the burning of the steamer Knickerbocker by the Confederates.

U. S. S. MERCURY,
Off Smith's Point, Virginia, February 15, 1865.

SIR: I respectfully report that at 9 a. m., while at anchor of Goff's Bar, between Smith's and Fleet's points, Virginia, I discovered the steamer *Knickerbocker* (aground within 250 yards of the beach) on fire, sheets of flame issuing at the same instant from all parts of the vessel, a circumstance which excluded the possibility of extinguishing the flames. Her upper works (the only part of her above water) being all made of light, dry, pine lumber, the destructive element, so effectually put in action, consumed the thin planks composing the partitions and light canvas-covered decks with a greediness that defied all efforts to save them.

Seeing this, and having no particular orders in regard to her, I made no attempt to save her, but opened with my battery on the rebels, who were still lurking in the woods, chuckling with satisfaction over their (imagined) late success.

On a former occasion an attempt to fire her was made in the dark of night, a circumstance that proved unfavorable to the rebels, as the first glimmer of a light on board her was seen and reported by my lookouts.

The next moment a shell from the *Mercury's* 30-pounder passed through the *Knickerbocker*, another from the 20-pounder also penetrated her sides, and caused a failure of success on the part of the rebels, who, being naturally in dread of shells (since the last compliment paid by the commander in person to the rebels in Northumberland in the vicinity of Wicomico), beat a hasty retreat and abandoned the objects of their visit to the *Knickerbocker*. They seem to have profited by their experience and selected for this, their last and successful attempt, a more suitable time.

A more favorable opportunity could not have presented itself for the accomplishment of their designs, as the condensed state of the atmosphere was such as admitted of light clouds of smoke intermingling with it without being perceptible, and the strong light of day prevented any faint glimmer of a small fire from betraying the presence of the perpetrators until their object was accomplished and the vessel so effectually fired that nothing could save her. The matter of passing unperceived in a small canoe from the shore to the steamer and back again was rendered easy and safe by a fog of sufficient density to obscure any small object on the water passing along under the land.

I have within my reach easy and certain means of retaliation, in the destruction of two large houses owned by two rich and prominent secessionists, one a lieutenant in the rebel Army, the other a member of home guards, from whose house I was fired on during the affair in 1864 with the Northumberland home guards.

I am, very respectfully, your obedient servant,

THOS. NELSON,
Acting Ensign, Commanding.

Lieutenant-Commander E. HOOKER,
Commanding First Division Potomac Flotilla.

Report of Acting Volunteer Lieutenant-Commander Hooker, U. S. Navy, commanding First Division Potomac Flotilla, regarding Wolf Trap light-ship and other matters.

U. S. S. COMMODORE READ,
Rappahannock River, Virginia, February 19, 1865.

SIR: I arrived here last Tuesday afternoon all right, except a hole in the bulkhead of one sponson, which I have since repaired. On my arrival I learned that the light-ship on Wolf Trap was missing; the *Periwinkle* sent in search of her found her at Hampton Roads all safe. The light has not been replaced yet.

I was also informed, from sources which I believe to be trustworthy, that Fitzhugh with his party from Mathews County have crossed the Rappahannock and transported their boats to the Potomac; how many they number I have not learned.

Day before yesterday the oyster schooner *John U. Dennis*, of Baltimore, came in and reported to me that he had been oystering on York River, and that the boats of the vessels there had been fired upon by guerrillas; he estimated their number at between thirty and forty. He states that there was no gunboat near them at the time.

I enclose the reports of a collision between the *Mercury* and the light-ship. Acting Ensign Nelson also reports to me that an attempt was made a few nights since to fire the wreck of the steamer *Knickerbocker* on Smith's Point, but discovering the light, he opened fire upon the wreck and frustrated their designs. On the 15th, however, during

the fog, they succeeded in firing her in so many places that it was useless to attempt to save her. He therefore turned his attention to the woods around her and shelled them vigorously for a while. The wreck is entirely destroyed.

He also reports that squads of rebel cavalry, varying from ten to sixty or eighty, are often seen in the region of Smith's Point, and it is reported that a detachment of 600 or 800 cavalry rangers are in winter quarters at Lancaster Court-House.

The weather has been so bad that I have not been able to communicate with the shore as much as I could wish, and am not yet as well informed of the state of affairs in this region as I wish to be.

The rebel cavalry visited Fleet's Island (Butler's Hole) a short time before my arrival, robbing the people, and committing the grossest outrages on the wife of Mr. Spillman.

I hear of wagon trains collecting grain, etc., above us on the river, but as yet have no definite information regarding them, or the other matters in that vicinity.

Very respectfully, your obedient servant,

EDWARD HOOKER,
Actg. Vol. Lieut. Comdr., U. S. N., Comdg. 1st Div. Potomac Flotilla.

Commander F. A. PARKER, U. S. Navy,
Commanding Potomac Flotilla.

Report of Acting Volunteer Lieutenant-Commander Hooker, U. S. Navy, commanding First Division Potomac Flotilla, regarding rumored force under Fitzhugh, preparing for depredations in Chesapeake Bay.

U. S. S. COMMODORE READ,
Rappahannock River, Virginia, February 20, 1865.

SIR: The *Anacostia* is here with a dispatch from Captain [James] Taylor about sending the *Periwinkle* to Smith's Point. I sent her there yesterday, as per my letter of yesterday, and on the return of the *Freeborn* will send her to reenforce the *Periwinkle*, if necessary.

I yesterday heard a report, how worthy of credence I can not tell, that a force of some 400 men had collected on the northern neck; that they had 15 large boats and a number of canoes on Indian and Dimer's creeks and intended depredations on the bay. I have informed the *Periwinkle* and will endeavor to foil their purposes should there be such a gang. If the report is true, it is probable that Fitzhugh is among them, with the boats it is reported he took across the Rappahannock a week ago.

Very respectfully, your obedient servant,

EDW. HOOKER,
Actg. Vol. Lieut. Comdr., U. S. N., Comdg. 1st Div. Potomac Flotilla.

Commander F. A. PARKER, U. S. Navy,
Commanding Potomac Flotilla.

Report of Commander Parker, U. S. Navy, commanding Potomac Flotilla, of the capture, by U. S. S. Primrose, of three blockade runners.

U. S. S. DON,
Potomac Flotilla, February 25, 1865.

SIR: I have the honor to report to the Department that within the past week three boats, with three blockade runners, have been cap-

tured by the *Primrose*, commanded by Acting Ensign Owen. The men were delivered to the military authorities, and the boats sent to the naval depot at St. Inigoes.

I am, sir, very respectfully, your obedient servant,

FOXHALL A. PARKER,
Commander, Commanding Potomac Flotilla.

Hon. GIDEON WELLES,
Secretary of the Navy.

Report of Acting Ensign Nelson, U. S. Navy, commanding U. S. S. Mercury, of depredations committed by guerrillas.

U. S. S. MERCURY,
Off Smith's Point, Virginia, February 25, 1865.

SIR: I have just ascertained through a reliable source that on last Wednesday night 154 guerrillas (at the head of whom is Rice Airs, the person who captured Captain McDonald, of the light vessel off Smith's Point, and the same that shot Captain Dungan, of the revenue steamer *Reliance*) started from Little River, bound for Smith's Island, eastern shore. They have several boats, among which are the light vessel's tender, captured with Captain McDonald, the *Reliance's* cutter, taken from her in Mill Creek, and a catboat. The whole party is a most desperate set of thieves, robbers, and murderers, who use the cloth of the rebel flag to cover their crimes. Their design on the island is to rob the stores, capture and bring back the numerous refugees and deserters who have gone there from Virginia, and probably to capture some steamer, with which they intend to attack and destroy the light vessel, and even surprise the blockading vessels.

My informant, Captain Goff, a true Union man, who lives near Little River, on Tuesday morning (the guerrillas having arrived in the neck Monday evening) repaired at once to the beach to inform me of the fact; but not finding me there, and seeing in my place a strange steamer (the *Periwinkle*), he did not succeed in attracting the attention of those on board, nor did he dare to raise a flag of truce for fear of being seen by the guerrillas, who were encamped in the woods not more than 200 yards in his rear. I shall keep a vigilant watch on the light vessel until I receive further orders.

I am, sir, respectfully, your obedient servant,

THOS. NELSON,
Acting Ensign, Commanding.

Actg. Vol. Lieut. Commander EDWARD HOOKER, U. S. Navy,
Comdg. First Div. Potomac Flotilla, U. S. S. Commodore Read.

[Endorsement.]

Respectfully referred to Commander F. A. Parker, U. S. Navy. The *Morse* is now on the eastern shore, with orders to visit the light-houses, Smith's Island, etc., and gain all the information he can concerning the whereabouts of the guerrillas.

Very respectfully,

EDWARD HOOKER,
Acting Volunteer Lieutenant-Commander, U. S. Navy.

[Telegram.]

NAVY YARD, *February 26, 1865.*
(Received at Washington 4:30 p. m.)

SIR: I learn that 154 rebels have crossed the bay, bound to the eastern shore of Virginia. I have nine vessels cruising to intercept them on their return, and have notified the War Department of the expedition.

Respectfully,

F. A. PARKER.

Hon. G. WELLES,
Secretary Navy.

[Telegram.]

NAVY YARD [WASHINGTON], *February 26, 1865.*

Have all the Rappahannock vessels ready and full of coal by Wednesday next. Send the *Periwinkle* to Baltimore for a draft of men now there for the flotilla.

F. A. PARKER,
Commander.

Captain HOOKER,
Commanding Commodore Read.

[Telegram.]

NAVY YARD [WASHINGTON], *February 26, 1865.*

Send a vessel immediately to Acting Volunteer Lieutenant-Commander Hooker and tell him to send a vessel to Cherrystone without delay.

When the *Banshee* returns, tell Acting Volunteer Lieutenant Shankland to return immediately to the Rappahannock and report to Captain Hooker for duty.

F. A. PARKER,
Commander, etc.

Captain TAYLOR.

Report of Acting Volunteer Lieutenant-Commander Hooker, U. S. Navy, commanding First Division Potomac Flotilla, regarding immediate coaling of vessels.

U. S. S. COMMODORE READ,
Rappahannock River, Virginia, February 26, 1865—p. m.

SIR: Your order to have the vessels coaled on Wednesday morning is at hand. I have doubts about being able to accomplish it if the vessels have to go to Norfolk. I sent the *Periwinkle* to Norfolk on Thursday last to get coal, and she has not yet returned. I am told that vessels have sometimes to wait several days before they can get coal.

The *Commodore Read* has coal for about ten days; the *Morse*, I think, about the same. The *Freeborn* wants about 20 tons, and the *Yankee* about 50 tons.

The *Yankee* is now here with a hole in her boiler. I will have it patched before morning. The *Morse* is on the eastern shore, looking for the guerrillas reported to have crossed the bay.

I will go to Norfolk with the *Read* in the morning, and if the others can be coaled at St. Inigoes we may be in time.

Very respectfully, your obedient servant,

EDW. HOOKER,
Actg. Vol. Lieut. Comdr., U. S. N., Comdg. 1st Div. Potomac Flotilla.

Commander F. A. PARKER, U. S. Navy,
Commanding Potomac Flotilla.

[Telegram.]

NAVY YARD, *February 26, 1865.*
(Received at Washington 11:10 p. m.)

I have had a vessel cruising for some time in the vicinity of Cherrystone.

Respectfully, F. A. PARKER.

Hon. G. WELLES,
Secretary Navy.

Letter from Acting Volunteer Lieutenant-Commander Hooker, U. S. Navy, commanding First Division Potomac Flotilla, to commanding officers at Hampton Roads and Norfolk navy yard, regarding detention of U. S. S. Periwinkle.

U. S. S. COMMODORE READ,
Rappahannock River, Virginia, February 27, 1865.

GENTLEMEN: If the *Periwinkle* is not detained by you for some important purpose, I would respectfully ask that she may be ordered to return to her station at once. Her delay in returning is seriously confusing our plans for a movement of some importance.

I have the honor to remain, very respectfully, your obedient servant,

E. HOOKER,
Actg. Vol. Lieut. Comdr., U. S. N., Comdg. 1st Div. Potomac Flotilla.

COMMANDING OFFICER, U. S. NAVY,
Hampton Roads.

COMMANDANT U. S. NAVY YARD,
Portsmouth, Va.

[Telegram.]

[POINT LOOKOUT, MD.,?]
February 27, 1865—9 o'clock p. m.

SIR: By order of Captain Hooker I am now coaling at this point. My orders are to proceed to the eastern shore and send the *Morse* to St. Inigoes for coal. Captain Hooker intends to go to St. Inigoes to-morrow for the same purpose. Captain Taylor informs me that he can not coal any vessels from the Rappahannock at that place. What orders shall I convey to Captain Hooker? The *Yankee* left for Norfolk this morning for coal. The *Periwinkle* has not returned from Norfolk. Three guns have just been fired on the eastern shore. The *Morse* and *Mercury* are there.

Very respectfully, W. T. STREET,
Commanding Freeborn.

Commander F. A. PARKER,
Commanding Potomac Flotilla, Navy Yard, Washington, D. C.

Order of Acting Volunteer Lieutenant-Commander Hooker, U. S. Navy, commanding First Division Potomac Flotilla, to Acting Volunteer Lieutenant Shankland, U. S. Navy, commanding U. S. S. Banshee, to proceed to Cherrystone Inlet.

U. S. S. COMMODORE READ,
Rappahannock River, Virginia, February 27, 1865.

SIR: You will without delay proceed to Cherrystone Inlet, and at once put yourself in communication with the military authorities and learn everything which you can about any rebel forces which have crossed the bay.

You will also render every assistance in your power to the military authorities for the protection of the United States property at that depot. In two or three days you will return and report to me any information you may obtain.

Very respectfully, your obedient servant,

E. HOOKER,
Actg. Vol. Lieut. Comdr., U. S. N., Comdg. 1st Div. Potomac Flotilla.

Acting Volunteer Lieutenant W. F. SHANKLAND, U. S. Navy,
Commanding U. S. S. Banshee.

Letter from commanding officer St. Inigoes, Md., to Acting Volunteer Lieutenant-Commander Hooker, U. S. Navy, commanding First Division Potomac Flotilla, regarding orders to U. S. S. Anacostia to proceed to Tangier Sound.

U. S. NAVAL DEPOT,
St. Inigoes, Md., February 28, 1865—5 p. m.

SIR: Have just received a dispatch from Commander Parker. He is coming down immediately; has ordered the *Anacostia* to go to Tangier Sound, where it is reported that the rebels have two tugs. In that direction we heard heavy firing last evening, say at about 9 o'clock.

The *Heliotrope* is ordered to look after Smith's Point light-boat.

Commander Parker's order to-day in relation to coaling your vessel is as follows:

Let the Rappahannock Squadron coal at Norfolk until further orders.

I [have] no news to send you at this time. All is quiet about here.

Very respectfully, your obedient servant,

JAMES TAYLOR,
Acting Master, Commanding.

Acting Volunteer Lieutenant-Commander E. HOOKER,
Commanding First Division Potomac Flotilla.

[Telegram.]

CHERRYSTONE, *February 28, 1865.*

I arrived at this station at 8 a. m. this day by orders from Acting Volunteer Lieutenant-Commander Hooker. I found the *Periwinkle* here, by orders from the honorable Secretary of the Navy, and do not think it prudent to countermand the orders, as I have been ordered by Captain Hooker to do in case I come across her. The *Banshee* is too long to get up the river, and is now lying inside the light-house. I

have not as yet learned that any rebels have been known to have crossed the bay. Please inform Captain Hooker of my actions, as I am ordered to report to him to-morrow morning.

Very respectfully, your obedient servant,

WM. F. SHANKLAND,
Acting Volunteer Lieutenant, Commanding, etc.

Commander F. A. PARKER,
Commanding, etc.

Semimonthly statement of vessels of the Potomac Flotilla.

POTOMAC FLOTILLA, *March 1, 1865.*

Name.	Guns.	Class.	Commanding officer.	Present duty or station.
Anacostia	4	Screw	Acting Master Tole	Point Lookout.
William Bacon	4	Schooner	Acting Master Haines	Mouth of St. Mary's River.
Jacob Bell	4	Paddle wheel	Acting Volunteer Lieutenant Coop.	Potomac River.
Banshee	3	do	Acting Volunteer Lieutenant Shankland.	Rappahannock River.
Cœur de Lion	3	do	Acting Master Morris	Under repairs, St. Inigoes depot.
Currituck	5	Screw	Acting Second Assistant Engineer Clum, in charge.	Under repairs, navy yard.
Dragon	2	do	Acting Ensign Walker	Yeocomico River.
Don	8	do	Lieutenant-Commander Eastman.	Flagship.
Ella		Paddle wheel	Acting Ensign Gilley	Dispatch boat.
Eureka	2	Screw	Acting Third Assistant Engineer Wright, in charge.	St. Inigoes Creek.
Freeborn	3	Paddle wheel	Acting Master Street	Rappahannock River.
Fuchsia	6	Screw	Acting Ensign Johnson	Under repairs, navy yard.
Adolph Hugel	3	Schooner	Acting Master Taylor	Potomac River.
Heliotrope	3	Paddle wheel	Acting Ensign and Pilot Griffin	St. Inigoes Creek.
Juniper	2	Screw	Acting Ensign Sheridan	Potomac River.
Mercury	2	Paddle wheel	Acting Ensign Nelson	Wicomico River.
Morse	6	do	Acting Master Hyde	Rappahannock River.
Primrose	2	Screw	Acting Ensign Owen	Potomac River.
Periwinkle	2	do	Acting Master Macy	Rappahannock River.
Commodore Read	6	Paddle wheel	Acting Volunteer Lieutenant-Commander Hooker.	Do.
Resolute	2	Screw	Acting Ensign Gibson	Potomac River.
Rescue	1	do	Acting Ensign Barrett	St. Mary's River.
Stepping Stones	5	Paddle wheel	Acting Master Roderick	Under repairs, navy yard.
Teaser	2	Screw	Acting Ensign Potter	Potomac River.
Verbena	2	do	Acting Ensign Havens	Point Lookout.
Wyandank	2		Acting Master Nickerson	Storeship, St. Inigoes.
Yankee	4	Paddle wheel	Acting Master Cook	Rappahannock River.

The *Eureka's* hull has become so rotten that it is no longer able to bear her engines and boiler, so I am now taking them out.

FOXHALL A. PARKER,
Commander, Commanding Potomac Flotilla.

Hon. GIDEON WELLES,
Secretary of the Navy.

[Telegram.]

U. S. S. COMMODORE READ,
Rappahannock River, Virginia, March 1, 1865.

The *Periwinkle* has arrived and I have taken her coal for the *Read.* I send her to Point Lookout for further orders from you. She has coal enough to go to Baltimore and return if necessary. If she goes, had she not better get coal there?

that they are in an old battery below Lowry's Point, but just where I am not certain. I think it still more likely that all their guns are at Jones Point.

Very respectfully, your obedient servant,

EDW. HOOKER,
Actg. Vol. Lieut. Comdr., U. S. N., Comdg. 1st Div. Potomac Flotilla.

Commander F. A. PARKER, U. S. Navy.
Commanding Potomac Flotilla.

P. S.—I think that in a few days I shall have more definite information.

E. HOOKER.

Report of Commander Parker, U. S. Navy, commanding Potomac Flotilla, of the capture, by the U. S. S. Thomas Freeborn, of two Confederate soldiers and a blockade runner.

U. S. S. DON,
Rappahannock River, March 5, 1865.

SIR: I have the honor to report to the Department that on the night of the 3d instant Acting Master Street, commanding the *Freeborn*, landed with a portion of his men on the north bank of the Piankatank River and captured James H. Jackson, sergeant, Company I, Fifty-fifth Virginia Infantry.

On the same night William Smith, blockade runner, was taken by the *Freeborn*. All the above-named men have been delivered over to the provost-marshal at Point Lookout, together with many refugees and deserters from the rebel service.

I am, sir, very respectfully, your obedient servant,

FOXHALL A. PARKER,
Commander, Commanding Potomac Flotilla.

Hon. GIDEON WELLES,
Secretary of the Navy.

Report of Acting Volunteer Lieutenant-Commander Hooker, U. S. Navy, commanding First Division Potomac Flotilla, of the capture, by the U. S. S. Thomas Freeborn, of two Confederate soldiers and a blockade runner.

U. S. S. COMMODORE READ,
Rappahannock River, Virginia, March 4, 1865.

SIR: I have to report that having received information that several members of Lee's army living in this vicinity were home on furlough, I directed Acting Master Street, while cruising on the Piankatank, to make a night landing and attempt the capture of some of them.

The proposed landing was made by him on the evening of March 3, and resulted in the capture of the following persons attached to the Fifty-fifth Virginia Regiment Infantry.

Later in the night Captain Street captured a blockade runner.

James H. Jackson, sergeant, Company I, Fifty-fifth Virginia Regiment Infantry.

Robert D. Weston, private, Company H, Fifty-fifth Virginia Regiment Infantry.

William Smith, blockade runner.

These persons are now on board my vessel.

Very respectfully, your obedient servant,

EDW. HOOKER,
Actg. Vol. Lieut. Comdr., U. S. N., Comdg. 1st Div. Potomac Flotilla.

Commander F. A. PARKER, U. S. Navy,
Commanding Potomac Flotilla.

[Telegram.]

WASHINGTON, D. C., *March 4, 1865.*

Information received that rebels dressed as females intend to decoy a steamer by showing a white flag from Wicomico, to seize Smith's Point light-boat, and then [go] to Tangier and Smith's Island, Accomac County, Va. Failing in this, to cross the bay in their boats whenever able.

GIDEON WELLES.

Commander PARKER.

[Telegram.]

ST. MARY'S, *March 4, 1865.*
(Received at Washington 11:55 a. m.)

SIR: Telegram received and will be immediately attended to. I am now getting underway for the Wicomico.

Respectfully,

F. A. PARKER,
Commander.

Hon. GIDEON WELLES.

Order of Commander Parker, U. S. Navy, commanding Potomac Flotilla, to Acting Volunteer Lieutenant-Commander Hooker, U. S. Navy, commanding First Division, regarding light-boats.

U. S. S. DON,
Potomac Flotilla, March 4, 1865.

SIR: I enclose copy of telegram just received from the Secretary of the Navy. I am at the Great Wicomico; keep a vessel cruising along the eastern shore to protect light-boats. Come out yourself this evening to the outer buoy, and look out for this vessel.

Respectfully,

FOXHALL A. PARKER,
Commander, Commanding Potomac Flotilla.

Acting Volunteer Lieutenant-Commander HOOKER, or
COMMANDING OFFICER, *Comdg. First Division Potomac Flotilla.*

Report of Commander Parker, U. S. Navy, commanding Potomac Flotilla, relative to measures in operation for the protection of Chesapeake Bay and its tributaries.

U. S. S. DON,
Potomac Flotilla, March 4, 1865.

SIR: Within fifteen minutes from the time I received your telegram this morning in relation to "rebels dressed as females endeavoring to

seize a steamer," etc., I was underway for the Great Wicomico, where I found the *Mercury*, whose commanding officer, Acting Ensign Nelson, will not fail to give a good account of the rebels if they attempt to seize his vessel or the light-ship off Smith's Point. I have a gunboat cruising off Cherrystone, and the Department may rest assured that no effort shall be wanting on my part, with the small force under my command, to guard the Chesapeake and its tributaries. I would earnestly request, however, that three good sea boats of light draft and a picket launch be added to this flotilla.

I frequently hear of small parties of guerrillas being on the northern neck (carrying with them boats on wheels), whom I could easily capture if I had an infantry force ready to move at an hour's notice. I have organized a battery of light artillery for shore service, but as I can only take a few men from each vessel it takes me two days to collect an infantry force large enough to support the battery. I am well persuaded that 200 marines quartered at the depot at St. Inigoes would render more efficient service to the country in the next two months than they could afloat in as many years; but if the marines can not be spared, then I would respectfully recommend that 200 picked seamen be detailed for service as infantry in the flotilla.

I have the honor to be, your obedient servant,

FOXHALL A. PARKER,
Commander, Commanding Potomac Flotilla.

Hon. GIDEON WELLES,
Secretary of the Navy.

Report of Acting Volunteer Lieutenant-Commander Hooker, U. S. Navy, commanding First Division Potomac Flotilla, regarding refugees and a deserter.

U. S. S. COMMODORE READ,
Rappahannock River, Virginia, March 4, 1865.

SIR: I have to report that I have on board the following refugees and deserter, viz:

Robert B. Craig, Robert Reese, Peter Roach, Mary Roach and child, from Richmond; Luther Walker, deserter from Twelfth Virginia Infantry.

Very respectfully, your obedient servant,

EDW. HOOKER,
Act. Vol. Lieut. Comdr., U. S. N., Comdg. 1st Div. Potomac Flotilla.

Commander F. A. PARKER, U. S. Navy,
Commanding Potomac Flotilla.

Report of Commander Parker, U. S. Navy, commanding Potomac Flotilla, regarding expeditions to Jotank and Passpatansy creeks, Maryland.

U. S. S. DON,
Potomac Flotilla, March 5, 1865.

SIR: The provost-marshal of Charles County, Md., having informed me that the rebels had secreted a large boat in one of the creeks on the opposite shore of the Potomac for the purpose of making a raid into Maryland, I sent a force of seventy-five men under the command of

Acting Ensign McConnell to Chotank [Jotank] Creek on the 3d instant, and to Passpatansy Creek on the 5th instant. On both occasions our men had a skirmish with some of Mosby's guerrillas, driving them, without loss to us, about 4 miles into the interior; and in Passpatansy Creek they discovered and destroyed the boat looked for, which Acting Ensign McConnell reports as a remarkably fine one, painted lead color, and capable of holding fifty men. It had been recently brought from Fredericksburg, and its rowlocks carefully muffled for night service. Five boxes of tobacco were found near the boat, which I have distributed to the captors.

Acting Ensign McConnell in conducting these expeditions displayed energy and intelligence, and I earnestly hope that he may obtain the lieutenancy in the Marine Corps which he has applied for.

I am, sir, very respectfully, your obedient servant,

FOXHALL A. PARKER,
Commander, Commanding Potomac Flotilla.

Hon. GIDEON WELLES,
Secretary of the Navy.

Report of Commander Parker, U. S. Navy, commanding Potomac Flotilla, of the dispersion of Confederate force on Jones Bluff.

U. S. S. DON,
Rappahannock River, March 6, 1865.

SIR: Learning that the rebels had a rifled fieldpiece on Jones Bluff, I directed Lieutenant-Commander Eastman this morning at daylight to stand in and dislodge it, but as we approached within about 200 yards of the bluff and threw in a broadside, the rebels ingloriously limbered up and fled without having the politeness to return our fire.

I have the honor to be, your obedient servant,

FOXHALL A. PARKER,
Commander, Commanding Potomac Flotilla.

Hon. GIDEON WELLES,
Secretary of the Navy.

Report of Commander Parker, U. S. Navy, commanding Potomac Flotilla, regarding vessels furnished for cooperation with army expedition to Fredericksburg.

U. S. S. DON,
Rappahannock River, March 6, 1865.

SIR: I have the honor to report to the Department that the *Western World* and *Delaware* arrived here yesterday, under orders from Commodore Radford, to cooperate with an army expedition to Fredericksburg. As one of these boats was without a pilot, and the pilot of the other was totally unacquainted with the Rappahannock, I have sent them to cruise on the eastern shore of Virginia, substituting in their place the *Commodore Read* and *Yankee*, which, with the army gunboats and transports, went up the Rappahannock this morning.

I am, sir, very respectfully, your obedient servant,

FOXHALL A. PARKER,
Commander, Commanding Potomac Flotilla.

Hon. GIDEON WELLES,
Secretary of the Navy.

Report of Acting Ensign Nelson, U. S. Navy, commanding U. S. S. Mercury, of the arrival on board that vessel of two Confederate deserters.

U. S. S. MERCURY,
Off Great Wicomico, Virginia, March 6, 1865.

SIR: I would respectfully report that this evening two deserters, viz, Robert Coleman and Drury D. Davis, both of the Ninth Virginia Cavalry, Company K, Captain Robert H. Pratt, commanding, came on the shore and claimed protection of the United States. I took them on board, administered the oath of allegiance (to the United States), and have since transferred them to the *Anacostia* for passage to Point Lookout.

I am sir, very respectfully, your obedient servant,

THOS. NELSON,
Acting Ensign, Commanding.

Acting Volunteer Lieutenant-Commander EDWARD HOOKER,
Commanding First Division Potomac Flotilla.

[Telegram.]

NAVY DEPARTMENT, *March 7, 1865.*

You will assume command of all vessels sent on service within the limits of your command.

GIDEON WELLES,
Secretary of the Navy.

Commander F. A. PARKER,
Commanding Potomac Flotilla, St. Mary's, Md.

Combined army and navy expedition to Fredericksburg, Va., March 6-8, 1865.

Order of Commander Parker, U. S. Navy, commanding Potomac Flotilla, to Acting Volunteer Lieutenant-Commander Hooker, U. S. Navy, commanding First Division, to cooperate with the Army.

U. S. S. DON,
Potomac Flotilla, March 6, 1865.

SIR: With the *Commodore Read*, *Yankee*, *Delaware*, and *Heliotrope*, you are hereby directed to cooperate fully with the army expedition now on its way to Fredericksburg.

In ascending the Rappahannock you will be particularly careful in looking out for torpedoes; having all narrow channels and shoal places carefully swept by the small boats kept in advance of the flotilla. At points where torpedoes may be exploded from the shore, you will land flanking parties, and you are to shell as usual all heights, etc.

I am, respectfully, yours,

FOXHALL A. PARKER,
Commander, Commanding Potomac Flotilla.

Acting Volunteer Lieutenant-Commander ED. HOOKER,
Commanding U. S. S. Commodore Read.

Report of Commander Parker, U. S. Navy, commanding Potomac Flotilla, giving results of combined expedition to Fredericksburg.

U. S. S. DON,
Potomac Flotilla, March 10, 1865.

SIR: I have the honor to inform the Department that the army expedition referred to in my communication of the 6th instant returned on the afternoon of the 8th, after destroying at Hamilton's Crossing near Fredericksburg (according to the report of Acting Volunteer Lieutenant-Commander Hooker), the depot, railroad bridge, twenty-eight loaded cars, an army wagon train, and many miles of the railroad track. A large quantity of tobacco, several bales of cotton cloth, and thirty-eight mules were brought off, and thirty prisoners captured.

The *Commodore Read* and *Yankee* cooperated heartily with the Army and destroyed many boats on their way up the river.

I am, sir, very respectfully, your obedient servant,

FOXHALL A. PARKER,
Commander, Commanding Potomac Flotilla.

Hon. GIDEON WELLES,
Secretary of the Navy.

Detailed report of Acting Volunteer Lieutenant-Commander Hooker, U. S. Navy, commanding First Division Potomac Flotilla.

U. S. S. COMMODORE READ,
Rappahannock River, Virginia, March 8, 1865.

SIR: I have the honor to report that after having parted company with you off Jones Point, Rappahannock River, in obedience to your orders, I pushed on up the river. At first my progress was considerably delayed by the movements of the army boats having charge of coal and supplies.

On my arrival at Tappahannock, however, I found some of the transports aground and the *Yankee*, Acting Master Cook, commanding, and army boat *Chamberlain* stopping to render them assistance. I also here found Brigadier General [S. H.] Roberts, commanding the troops of the expedition, and deeming it proper that the commanding officers of both arms of the service should be together, I extended to him an invitation to make my ship his headquarters, an invitation which was promptly accepted by the general.

The transports were soon got afloat, and in consideration of the weakness of the *Yankee's* boiler, I deemed it proper to order her to bring up the extreme rear, in doing which she would be necessitated to carry but a light pressure of steam.

The general also ordered the army gunboat *Chamberlain* to remain with and assist the *Yankee* in her duty.

With the *Read* I then pushed forward up the river at full speed, shelling such places as I had suspicions of on my way.

It was my original intention to have changed at Port Royal from the *Commodore Read* to some vessel of lighter draft, but on my arrival at that place I found that a freshet had raised the river some two or more feet and that the army boats were still in the advance and that the *Yankee* was yet some distance in the rear. I therefore decided to push on with the *Read* as rapidly as possible and to as high a point as I could with safety carry her.

On my way up several boats were captured, but being of no value were destroyed. In this manner I reached the obstructions 6 miles

below Fredericksburg at about 7 o'clock p. m. and anchored the ship. The *Yankee* arrived soon after. The latter part of the way I found some of the transports anchored or aground.

After anchoring I dispatched Mr. Shurtleff and my pilot with a number of men to render such assistance as they might be able to do to the transports in moving up nearer or landing their troops where they then were. At the same time the general and myself started in my own gig for the city and landed at the wharf at about 9 o'clock p. m. We here found some detachments of the troops, while others were soon coming in. A picket of 50 men were crossed in my boat to the north bank of the river. The other troops were soon started to accomplish the object of the expedition. In this they were eminently successful, burning and destroying the railroad bridge, the depot, and a portion of the track at and near Hamilton's Crossing, some 6 miles from Fredericksburg; also the telegraph line was cut and the telegraphic apparatus brought away. A train of twenty-eight cars, eighteen of them being loaded principally with tobacco, and an army wagon train were also captured and burned.

A considerable number of mules were captured, some thirty or forty prisoners taken. A mail containing a quantity of valuable information was secured. Within the city several hundred boxes of tobacco and some bales of cotton cloth were seized and loaded on one of the army boats.

At 3 o'clock on Tuesday the troops were reembarked and we commenced the descent of the river.

During the night several of the boats grounded, and some collisions occurred, but no very serious damage. I, however, found it necessary to relieve one of the transports and did so by putting 200 men on board the *Yankee*. During the descent the enemy made their appearance at various points, and in two or three instances their sharpshooters fired on the boats, but I am happy to report that we have no casualties. Their fire was promptly replied to by the *Yankee*, and at one or two points by the *Read*, the army boats also joining in shelling.

At about 3 o'clock this p. m. (March 8) the expedition arrived in safety at the mouth of the river, the army portion of it proceeding direct to Fortress Monroe (the troops from the *Yankee* having been put on board one of the army boats) and the naval portion of it remaining here.

In closing it is proper that I should express the pleasure which I have experienced in my late association with General Roberts and the confidence which he seemed to repose (expressed more in action than in words) in my ability to manage the floating part of the expedition.

Very respectfully, your obedient servant,

EDW. HOOKER,
Actg. Vol. Lieut. Comdr., U. S. N., Comdg. 1st Div. Potomac Flotilla.

Commander F. A. PARKER, U. S. Navy,
Commanding Potomac Flotilla.

Report of Commander Parker, U. S. Navy, commanding Potomac Flotilla, regarding restrictions placed upon oyster schooners in York River, Virginia.

U. S. S. DON,
Rappahannock River, March 9, 1865.

SIR: In obedience to your order of January 31, I have assumed command of the Chesapeake "up to and including Back River, Virginia, with the vessels on duty within these limits."

Mobjack Bay has been visited only about once a month since September last.

On York River I found that oyster schooners were allowed to proceed nearly to West Point, and to have free intercourse with the shore, while at Yorktown, persons from Gloucester County, Va., upon merely taking the oath of allegiance, were permitted to cross the river and trade with a sutler named Gallagher, so that by this strange regulation the very rascal who to-day in the uniform of a rebel soldier fires upon the Potomac Flotilla from the banks of the Piankatank, to-morrow, in the dress of a citizen, trades peacefully and in full security at an army post.

I have stationed a vessel in Mobjack Bay, have directed that the oyster schooners be not allowed to ascend the York River beyond Cappahosic, a point 10 miles above Yorktown, and have placed them under the supervision of a gunboat and have prohibited all intercourse with the rebel territory and all traffic with persons outside of our military lines.

I have the honor to be, your obedient servant,

FOXHALL A. PARKER,
Commander, Commanding Potomac Flotilla.

Hon. GIDEON WELLES,
Secretary of the Navy.

Order of Commander Parker, U. S. Navy, commanding Potomac Flotilla, to commanding officer U. S. S. Commodore Read, to seize schooner Ann Pickerel.

U. S. S. DON,
Potomac Flotilla, March 9, 1865.

SIR: Seize the schooner *Ann Pickerel* wherever she may be found and send her to me at St. Inigoes. This schooner will endeavor to land goods either in Mobjack Bay or the Piankatank.

Respectfully,

F. A. PARKER,
Commander, Commanding Flotilla.

COMMANDING OFFICER U. S. S. COMMODORE READ.

Order of the Secretary of the Navy to Rear-Admiral Porter, U. S. Navy, commanding North Atlantic Blockading Squadron, regarding transfer of men.

NAVY DEPARTMENT, *March 11, 1865.*

SIR: Send a force of 250 steady and reliable men, fit for duty on shore, to report to Commander F. A. Parker for duty in the Potomac Flotilla.

Very respectfully,

G. WELLES,
Secretary of the Navy.

Rear-Admiral D. D. PORTER,
Comdg. North Atlantic Blockading Squadron, Hampton Roads, Va.

Report of Acting Volunteer Lieutenant-Commander Hooker, U. S. Navy, commanding First Division Potomac Flotilla, regarding requests from Generals Grant and Roberts, U. S. Army, for cooperation of naval force.

U. S. S. COMMODORE READ,
Rappahannock River, Virginia, March 12, 1865.

SIR: On the morning after you left this river (Saturday, March 11) I proceeded to Monaskon, and took off Mrs. Wells and family; on my way up to and from there, picking up two boat loads of deserters from the rebel army, returning to the mouth of the river in the afternoon. Soon after my return the *Banshee* arrived from Norfolk and informed me that the *Freeborn* was undergoing repairs at that place, and probably would not return for several days. At about the same time the army gunboat *Chamberlain* arrived, having on board General Roberts, who informed me that transports with troops on board were rendezvousing at Piney Point, preparatory to a movement on the northern neck, in which he asked our cooperation on the Rappahannock. He also had a telegram from General Grant to Captain Glisson at Hampton Roads, requesting the cooperation of the same naval force which had accompanied him to Fredericksburg. This telegram Captain Glisson had directed him to show to you, and he left here for St. Inigoes for that purpose. At the same time I informed him that I had already been directed by you to cooperate with the Army in any such movement as fully as possible; my ship, however, was full of refugees and deserters and my coal bunkers nearly empty.

I then started for Point Lookout, leaving orders for the *Delaware* and *Morse* to go up the river as far as Tappahannock. The *Morse* having no Rappahannock pilot, I took from an oyster schooner James Prechett, reputed to be one of the best Rappahannock pilots, and sent him to pilot her. I arrived at Point Lookout at about 8:30 p. m. and obtained permission to land my refugees and deserters at that time. This I did, and proceeded thence to St. Inigoes, getting to the coal wharf so as to commence coaling about midnight. At 8:30 [a. m.] I was again coaled and started for this place, stopping on my way to communicate with several of our vessels, and arriving here at about 4:20 this p. m. The *Delaware*, *Morse*, and army boat *Mosswood* are up the river, and I shall proceed on immediately.

General Roberts visited St. Inigoes to meet you, but did not find you there. Since then I have heard nothing from him.

Very respectfully, your obedient servant,

EDW. HOOKER,
Actg. Vol. Lieut. Comdr., U. S. N., Comdg. 1st Div. Potomac Flotilla.

Commander F. A. PARKER, U. S. Navy,
Commanding Potomac Flotilla.

Order of the Secretary of the Navy to commandant navy yard, Norfolk, Va., regarding U. S. S. Hetzel.

NAVY DEPARTMENT, *March 13, 1865.*

SIR: Order the *Hetzel* and one of the picket launches at navy yard to proceed to St. Inigoes, Md., and report to Commander F. A Parker for duty in the Potomac Flotilla.

Very respectfully, etc.,

G. WELLES,
Secretary of the Navy.

Captain J. M. BERRIEN,
Commandant Naval Station, Norfolk.

Order of the Secretary of the Navy to Rear-Admiral Porter, U. S. Navy, commanding North Atlantic Blockading Squadron, regarding vessels for duty in Potomac Flotilla.

NAVY DEPARTMENT, *March 13, 1865.*

SIR: Order the *Nansemond*, *Western World*, *Litte Ada*, and *Moccasin* to proceed to St. Inigoes, Md., and report to Commander F. A. Parker for duty in the Potomac Flotilla. The commandant at Norfolk has been instructed to give similar orders to the *Hetzel* and one of the picket launches at that yard.

Very respectfully, etc.,

G. WELLES,
Secretary of the Navy.

Rear-Admiral D. D. PORTER,
Comdg. North Atlantic Blockading Sqadron, Hampton Roads, Va.

Report of Acting Volunteer Lieutenant-Commander Hooker, U. S. Navy, commanding First Division Potomac Flotilla, of expedition up the Rappahannock River in cooperation with the army forces.

U. S. S. COMMODORE READ,
Rappahannock River, Virginia, March 14, 1865.

SIR: On the evening of Sunday, March 12, I proceeded up this river to cooperate with the army movement on the northern neck, referred to in a previous report. At about 9:30 p. m. I communicated with the *Delaware*, *Morse*, and army gunboat *Mosswood*, at anchor near old Fort Lowry.

I ordered the *Morse* to get underway and patrol the river near Tappahannock ferry, and leaving the *Mosswood* to look out for Circus Point and Bowlers Rocks, took with me the *Delaware* and pushed on up to Leeds [Leedstown], below which I expected to communicate with the general.

At about 4 a. m. we turned and slowly retraced our way down the river. At about 6 a. m. heard heavy firing below us and pushed on at full speed. At 7:30 passed Lowry's Point, and found the *Morse* shelling the woods near the old battery at Paradise. Communicated with the *Morse* and learned that the enemy had opened fire on her with two rifled fieldpieces from the old battery at about 5 o'clock a. m., and continued their fire until we came in sight on our way down, the *Morse* and *Mosswood* returning their fire. Neither vessel was hit, although the shot fell in close proximity. The *Mosswood* had her galley pipe knocked off. I at once turned back and commenced shelling the woods in the vicinity of the old battery, thinking the guns, although withdrawn from the battery, might be concealed within the woods. I also dispatched Acting Master Eldridge in the *Delaware* to destroy some large boats at Tappahannock. Our shelling of the woods occasionally brought out squads of cavalry, but failed to discover the whereabouts of the guns. I therefore sent on shore an armed boat under charge of Acting Ensign Shurtleff to endeavor to obtain information. He reached their battery, exchanged some shots with them, obtained information of their position in the woods, learned from negroes that the guns had gone up the road, and that there were about 100 cavalry in the woods near by. From the

ship I could see squads of cavalry, which I took to be reenforcements coming up the river road. I therefore made signals, and Mr. Shurtleff returned on board without casualties and having, it is believed, emptied some of their saddles.

From the information derived, I was fearful that the guns had gone to Tappahannock. I therefore sent the *Morse* to reenforce the *Delaware* and dispatched the *Mosswood* down the river to feel for the guns should they have gone in that direction, and also to look out for signals from the Army. With the *Read* I remained in front of the battery, occasionally shelling the woods, and squads of cavalry crossing open places [with] several riderless horses attest some success. Finally, however, I remained quiet, thinking they might gather together in larger number and inadvertently expose themselves to our sight. Toward night quite a number of them were discovered in the battery at work with spades, repairing the damages. At the same time the *Delaware* returned from Tappahannock and reported the complete destruction of all the boats at that place, many of them new, and quite a number of them large scows, capable of carrying cavalry and artillery across the river.

Acting Master Eldridge also reported to me that he could, in his opinion, place the *Delaware* in such position as to reach and destroy the bridge below Tappahannock with his shells. This I directed him at once to do, taking with him the *Morse* to render assistance. He has since verbally informed me that the bridge was destroyed, having been hit several times by both the *Delaware* and *Morse*, the first shot striking it while a squad of cavalry were in the act of crossing. In the meantime with the *Read* I dropped into a suitable position and delivered a rapid fire upon the battery which soon cleared it of all working parties.

It was now nearly night, and discovering a small boat coming up the river with ensign set, I ran for it and found it to be a boat from the *Mosswood* returning to inform me that the *Mosswood* was hard and fast aground.

I at once started down to her relief, having previously directed the other vessels to drop down near Bowlers for a night anchorage. On arriving at the *Mosswood* I found myself unable to get her afloat at that tide, and therefore anchored near her, the *Delaware* and *Morse* anchoring about a mile above me. During the night several signal lights were seen on shore, and lights as of a working party were discovered abreast of my vessel. At 1 a. m. got the *Mosswood* afloat and she anchored near me. At about 1:30 the *Banshee* arrived with a verbal communication from General Roberts, informing me that he had reembarked his troops and was then en route for the York River, in accordance with a dispatch from General Grant, and requesting my cooperation with him on that river. I sent the *Banshee* to order the other vessels to get underway and proceed down the river. At the same time I got underway with the *Read*, followed by the *Mosswood*, and proceeded down, arriving here about 5 a. m.

The other vessels have not yet arrived. I have sent the *Mosswood* on and shall, with the *Read*, proceed as far as Yorktown to obtain further information in regard to movements in progress there.

Respectfully, your obedient servant,

E. HOOKER,
Actg. Vol. Lieut. Comdr., U. S. N., Comdg. 1st Div. Potomac Flotilla.

Commander F. A. PARKER, U. S. Navy,
Commanding Potomac Flotilla.

Instructions of Acting Volunteer Lieutenant-Commander Hooker, U. S. Navy, commanding First Division Potomac Flotilla, to Acting Master Shankland, commanding the U. S. S. Banshee.

U. S. S. COMMODORE READ,
Rappannock River, Virginia, March 14, 1865.

SIR: You had better come on down to York River bringing the *Delaware* and *Morse* with you. Be sure that Captain Macy of the *Periwinkle* understands about oyster vessels. Tell Captain Hyde to leave the book (Oyster Schooners) with Macy.

Tell Captains Eldridge and Hyde that I want written reports of their doings yesterday. Hyde, of the attack on him previous to my coming; also his going to reenforce Eldridge. Eldridge, of his seeing the guns leaving as we came down the river and his doings at Tappahannock.

Very respectfully, your obedient servant,

EDW. HOOKER,
Actg. Vol. Lieut. Comdr., U. S. N., Comdg. 1st Div. Potomac Flotilla.

Captain SHANKLAND.

P. S.—I have just received information from shore of a force gathering to destroy the oyster schooners. Leave the *Morse* with the *Periwinkle* to take care of them. Make the schooners anchor well out from shore.

EDW. HOOKER.

Report of Acting Master Eldridge, U. S. Navy, commanding U. S. S. Delaware, regarding operations of that vessel in Rappahannock River.

U. S. S. DELAWARE,
White House Landing, Virginia, March 15, 1865.

SIR: In obedience to your order of the 13th instant, I proceeded up the Rappahannock River to observe the movements of the enemy.

I landed a small force at Tappahannock, where I found eight small boats and one large flatboat, used as a ferryboat, all of which I destroyed.

I learned that the enemy had a force of about eighty cavalry in the vicinity, some of them having left but a few minutes before I landed.

Subsequently I saw about twenty cavalry, who were about to cross Gordon's Creek. I shelled them vigorously for a few minutes and succeeded in driving them away.

I also destroyed the bridge, thereby cutting off their communication with Fort Lowry.

Night coming on, I dropped down and anchored off Union wharf. During the night the *Banshee* arrived with orders for this vessel to proceed to York River. She subsequently got aground, and I was called to assist in getting her off, which detained me until the following night.

I have the honor to be, sir, very respectfully, your obedient servant,

J. H. ELDRIDGE,
Acting Master Commanding.

Actg. Vol. Lieut. Commander E. HOOKER, U. S. Navy,
Comdg. 1st. Div. Potomac Flotilla, U. S. S. Commodore Read.

Report of Commander Parker, U. S. Navy, commanding Potomac Flotilla, of engagement between U. S. S. Morse and Confederate battery near Fort Lowry, Va.

U. S. S. DON,
Potomac Flotilla, March 31, 1865.

SIR: I have the honor to report that on the 13th instant the U. S. S. *Morse*, commanded by Acting Master G. W. Hyde, engaged on the Rappahannock, near Fort Lowry, a rebel light battery, and after an engagement of two hours succeeded in driving it away.

The *Morse*, although struck several times, suffered no material damage, and not an officer nor man was hurt.

I am, sir, very respectfully, your obedient servant,

FOXHALL A. PARKER,
Commander, Commanding Potomac Flotilla.

Hon. GIDEON WELLES, *Secretary of the Navy.*

Report of Acting Master Hyde, U. S. Navy, commanding U. S. S. Morse, of engagement with Confederate battery near Fort Lowry, Va.

U. S. S. MORSE,
Rappahannock River, Virginia, March 15, 1865.

SIR: I would respectfully submit the following report:

On the morning of the 13th, while proceeding up the Rappahannock in obedience to your order, the enemy opened upon me from a battery which they had erected about a mile from Fort Lowry. I immediately returned the fire, and, after an engagement of about two hours' duration, silenced it. About 10 o'clock got underway to reenforce the U. S. S. *Delaware* opposite Tappahannock; came to anchor with the above-mentioned vessel about 50 yards from the wharf.

About 2 p. m. the *Delaware* went down the river to communicate with the U. S. S. *Commodore Read;* at 3:20 p. m. got underway and went down the river as far as Fort Lowry; met the *Delaware* coming up and was ordered to follow him; 4:30 commenced shelling the woods and a bridge about a half mile from Tappahannock, in company with the *Delaware.* At 5:15 p. m. ceased firing and stood down the river; about 6 o'clock got aground on Bowlers Rocks; sent up a rocket and fired a 24-pounder howitzer for assistance; 7 o'clock succeeded in getting off and communicated with *Delaware;* came to anchor in company with her about half-past 7 off Union wharf.

At 2:30 in the morning of the 14th spoke the U. S. S. *Banshee.* Received orders to get underway and proceed to York River. About 3 o'clock the *Banshee* got aground in the vicinity of Union wharf; remained near her in company with the *Delaware* to assist her in getting her off; 11 a. m. made fast to her with a 7-inch hawser and parted it; at 1 p. m. made fast to her mainmast with a new 12-inch hawser, and carried away her mast. About half-past 11 she floated off with the tide, and all three vessels got underway for the mouth of the Rappahannock.

The following ammunition was expended, viz:

29 percussion shell, 100-pounder Parrott.	19 10-second shell, IX-inch.
4 5-second shell, 100-pounder Parrott.	11 15-second shell, IX-inch.
4 10-second shell, 100-pounder Parrott.	6 concentric 10-second shell, IX-inch.
1 10-second shrapnel, 100-pounder.	3 howitzer shrapnel.
6 5-second shell, IX-inch.	1 howitzer canister.

GEORGE W. HYDE,
Acting Master, Commanding.

[Actg. Vol. Lieut. E. HOOKER, U. S. Navy,
Commanding First Division Potomac Flotilla.]

Report of executive officer U. S. S. Morse, of injuries sustained by that vessel in engagement with Confederate battery near Fort Lowry, Va.

U. S. S. MORSE,
Rappahannock River, Virginia, March 17, 1865.

SIR: I have to report the following damages in the carpenter's department of this vessel during the engagement with the rebel battery on the morning of the 13th instant:

Forward end of house, starboard side, started 3 inches; bulkhead between dispensary and steerage badly started; carlines of hammock nettings started 1 inch; two window sashes and glass totally destroyed; twenty panes of glass broken.

Very respectfully,

J. LOURIE,
Executive Officer.

GEO. W. HYDE,
Acting Master, Commanding.

Semimonthly statement of vessels of the Potomac Flotilla.

POTOMAC FLOTILLA, *March 15, 1865.*

Name.	Guns.	Class.	Commanding officer.	Present duty or station.
Anacostia	4	Screw	Acting Master Tole	Point Lookout.
William Bacon	4	Schooner	Acting Master Haines	Mouth of St. Mary's River.
Jacob Bell	4	Paddle wheel	Acting Volunteer Lieutenant Coop.	Potomac River.
Banshee	3	do	Acting Volunteer Lieutenant Shankland.	Eastern shore, Virginia.
Cœur de Lion	3	do	Acting Master Morris	In quarantine.
Currituck	5	Screw	Acting Master Arrants	Under repairs, navy yard.
Dragon	2	do	Acting Ensign Walker	Yeocomico River.
Don	8	do	Lieutenant-Commander Eastman.	Flagship.
Ella		Paddle wheel	Acting Ensign Gilley	Dispatch boat.
Eureka	2	Screw	Acting Third Assistant Engineer Wright in charge.	St. Inigoes Creek.
Freeborn	3	Paddle wheel	Acting Master Street	Rappahannock River.
Fuchsia	6	Screw	Acting Ensign Johnson	Under repairs, navy yard.
Adolph Hugel	3	Schooner	Acting Master Taylor	Potomac River.
Heliotrope	3	Paddle wheel	Acting Ensign Griffin	St. Inigoes Creek.
Juniper	2	Screw	Acting Ensign Sheridan	Potomac River.
Mercury	2	Paddle wheel	Acting Ensign Nelson	Wicomico River.
Morse	6	do	Acting Master Hyde	Rappahannock River.
Primrose	2	Screw	Acting Ensign Owen	Under repairs, navy yard.
Periwinkle	2	do	Acting Master Macy	Rappahannock River.
Commodore Read	6	Paddle wheel	Acting Volunteer Lieutenant-Commander Hooker.	Do.
Resolute	2	Screw	Acting Ensign Gibson	Potomac River.
Rescue	1	do	Acting Ensign Barrett	Under repairs, St. Inigoes.
Stepping Stones	5	Paddle wheel	Acting Master Roderick	St. Inigoes Creek.
Teaser	2	Screw	Acting Ensign Potter	Potomac Flotilla.
Verbena	2	do	Acting Ensign Havens	Point Lookout.
Wyandank	2		Acting Volunteer Lieutenant Nickerson.	Storeship, St. Inigoes.
Yankee	4	Paddle wheel	Acting Master Cook	Rappahannock River.
Crusader	7	Screw	Acting Volunteer Lieutenant Hays.	York River.
Mystic	7	do	Acting Master Wright	Eastern shore, Virginia.
Putnam	4	Paddle wheel	Acting Master Savage	York River.
Seymour	2	do	Acting Ensign Allen	Do.

Very respectfully,

FOXHALL A. PARKER,
Commander, Commanding Potomac Flotilla.

HON. GIDEON WELLES,
Secretary of the Navy.

Order of Commander Parker, U. S. Navy, commanding Potomac Flotilla, to Acting Volunteer Lieutenant-Commander Hooker, U. S. Navy, commanding First Division, regarding passes.

U. S. S. DON,
Potomac Flotilla, March 15, 1865.

SIR: Certain speculators will try to get through your lines on forged passes. You will not consider any pass as valid, even if it be signed by the President, unless it be countersigned by my stamp as annexed.

Respectfully,

FOXHALL A. PARKER,
Commander, Commanding Potomac Flotilla.

Acting Volunteer Lieutenant-Commander HOOKER,
Commanding First Division Potomac Flotilla.

Report of Acting Volunteer Lieutenant-Commander Hooker, U. S. Navy, commanding First Division Potomac Flotilla, of expedition to York River.

U. S. S. COMMODORE READ,
Rappahannock River, Virginia, March 16, 1865.

SIR: On Tuesday forenoon (March 14), after communicating with the shore for information, having left orders for the *Morse* and *Periwinkle* to blockade the mouths of the Rappahannock and Piankatank, I proceeded on my way to the York River. Soon after leaving this river I communicated with the *Freeborn* returning from Norfolk. Captain Street informed me that General Grant had asked Captain Glisson for the cooperation of our vessels with the Army on York River, and that Captain Glisson had sent to you about it. Captain Street informed Captain Glisson that probably you would not be on the Rappahannock, but that I would be here, and he brought a verbal request from Captain G. for me to cooperate.

Having directed Captain Street to look out for the Piankatank, I went on toward Yorktown and arrived there at 7 p. m. with my main steam pipe leaking.

I could not here learn that there was any force of the enemy near, or anything required other than convoy of transports. I therefore decided to return to the Rappahannock as soon as my steam pipe could be temporarily repaired. This was accomplished about noon of Wednesday, but as it was blowing very fresh from the southward I did not deem it prudent to risk the ship in a seaway lest the temporary repair should give out. I therefore remained until this morning and left there at daylight, arriving here at about 11 o'clock a. m.

In the meantime the *Delaware* had reached me and informed [me] of the accident to the *Banshee*.

Acting Volunteer Lieutenant Shankland informs me that he has officially reported the disaster to you; also that he can not remain here without some repairs. I therefore send him to St. Inigoes.

I can keep the *Read* here until her present supply of coal is out—say, next Monday or Tuesday. When she comes up, however, she will require several days' work; her boiler is leaking and requires calking, etc.

I enclose herewith Acting Master Hyde's report* of the *Morse's* doings on Monday; also of the injury to the *Banshee*. I have not yet got Acting Master Eldridge's report† of his doings at Tappahannock, but will forward it as soon as received.

Very respectfully, your obedient servant,

EDW. HOOKER,
Actg. Vol. Lieut. Comdr., U. S. N., Comdg. 1st Div. Potomac Flotilla.

Commander F. A. PARKER, U. S. Navy,
Commanding Potomac Flotilla.

[Telegram.]

ST. INIGOES, *March 16, 1865.*

Return to your duties off the Rappahannock at once, and let me know why you have left your station without any orders from me. The captain of the *Crusader* will have this sent to Captain Hooker forthwith.

F. A. PARKER,
Commander, Commanding, etc.

Acting Volunteer Lieutenant HAYS,
Commanding U. S. S. Crusader.

For Acting Volunteer Lieutenant-Commander E. HOOKER,
Commanding First Division Potomac Flotilla.

Report of Acting Volunteer Lieutenant-Commander Hooker, U. S. Navy, commanding First Division Potomac Flotilla, stating reasons for expedition to York River.

U. S. S. COMMODORE READ,
Rappahannock River, Virginia, March 18, 1865.

SIR: Your telegram to Acting Volunteer Lieutenant Hays for me is just received (8 o'clock a. m.). In reply, I would say the sudden abandonment of the expedition on the northern neck and transfer of the troops to the York River, the urgent appeal for cooperation, and the report that Sheridan was at the White House, induced me to believe that it was a matter of importance that a naval force should be got there with as little delay as possible, and that had you been here you would have gone on at once. You not being here, and I having no means of communicating with you, I took the responsibility of going as your representative, having left the waters here carefully blockaded, and knowing that there was a telegraph there by means of which I could communicate with you if necessary.

On my arrival there I found that there was not so much necessity as had been supposed, and had it not been for a leaking steam pipe I should have been back on the Rappahannock at daylight.

Very respectfully, your obedient servant,

EDW. HOOKER,
Actg. Vol. Lieut. Comdr., U. S. N., Comdg. 1st. Div. Potomac Flotilla.

Commander F. A. PARKER, U. S. Navy,
Commanding Potomac Flotilla.

---

* See p. 530. † See p. 529.

Report of Acting Master Street, U. S. Navy, commanding U. S. S. Thomas Freeborn, regarding movements of the enemy on the Rappahannock River.

U. S. S. FREEBORN, *March 16, 1865.*

SIR: All quiet on this station; was on shore yesterday. No enemy this side of Saluda; will hear of them should they come. This morning I stood into Milford Haven and came to an anchor; communicated with the shore, and learned that about a week ago the marines were in Mathews County, but crossed over to Middlesex County, and from thence up the right bank of the Rappahannock. They are detachments from vessels of the Confederate fleet below Richmond. My firing this morning was for practice.

Very respectfully, your obedient servant,

WM. TELL STREET,
Acting Master, Commanding.

Acting Volunteer Lieutenant-Commander E. HOOKER,
Commanding First Division Potomac Flotilla.

Letter from the Secretary of the Navy to Commander Parker, U. S. Navy, commanding Potomac Flotilla, regarding vessels carrying supplies to the enemy.

NAVY DEPARTMENT, *March 16, 1865.*

SIR: Lieutenant-General Grant asks the Department, by telegraph, if it would not be advisable to have gunboats sent into York River, Mobjack Bay, Piankatank River, and the Rappahannock frequently, to capture or destroy vessels running into those harbors for the purpose of supplying the enemy. It is presumed that the waters mentioned are receiving your attention; nevertheless, it is deemed proper to advise you of this request of Lieutenant-General Grant.

Very respectfully, etc.,

G. WELLES,
Secretary of the Navy.

Commander F. A. PARKER,
Commanding Potomac Flotillla.

Operations in Mattox Creek, Virginia, March 16–18, 1865.

Report of Commander Parker, U. S. Navy, commanding Potomac Flotilla, transmitting report of Lieutenant-Commander Eastman, U. S. Navy, commanding U. S. S. Don, regarding operations in Mattox Creek, Virginia.

U. S. S. DON,
Potomac Flotilla, March 21, 1865.

SIR: I have the honor to enclose herewith a report of Lieutenant-Commander Eastman, commanding this vessel, giving a very satisfactory account of operations conducted by him in Mattox Creek, Virginia, on the 16th, 17th, and 18th instant.

I am, sir, very respectfully, your obedient servant,

FOXHALL A. PARKER,
Commander, Commanding Potomac Flotilla.

Hon. GIDEON WELLES,
Secretary of the Navy.

[Enclosure.]

U. S. S. DON, *March 18, 1865.*

SIR: In obedience to your verbal instructions of the 15th, I left St. Inigoes with the *Stepping Stones*, *Heliotrope*, and *Resolute* at about 7 p. m.

I entered Mattox Creek, Virginia, at daylight, and on the 16th landed armed parties and examined all the houses in the vicinity and the creek on the left-hand side, the gunboats having grounded when we first entered. This part of the work was done by boats.

About 2 o'clock I sent Acting Ensign Brice, with 40 men, on the south side of Mattox Creek. He landed and found himself opposed by about 50 cavalry. He formed his men to receive their attack. While doing this, 8 or 10 cavalry came down on his left flank, which he drove off. The main portion, on seeing this, retired to the woods.

Having by this time got the *Stepping Stones* afloat, I steamed in, drove the rebels out of sight, and then sent Acting Ensign Brice to examine the houses; which he did, finding 6 bales of tobacco and a quantity of smoothbore musket-ball cartridges and caps.

It being now near night, and the *Heliotrope* being still aground, I came out in order to wait until morning, and in coming out the *Stepping Stones* was grounded.

The *Heliotrope* soon afterwards was afloat, and at 4 a. m. of the 17th came in, and I detailed her to assist the *Stepping Stones*, directing the commanding officer of the *Stepping Stones* to use every exertion to lighten his vessel, as I believed her to be hard aground, the wind having been blowing her on all the time.

At 8 a. m. I sent the launch with one smooth howitzer, Acting Ensign Summers in charge, up the right prong of Mattox Creek, marching up the shore myself with 70 sailors and marines. The creek was cleared, and the four boats found there were destroyed.

I then returned to the *Stepping Stones*, sending the launch up the left prong of Mattox Creek, with orders to clear that creek, which Acting Ensign Summers did most thoroughly; destroyed three schooners under a fire of musketry from 300 or 400 rebels, which fire in a few moments cut away half of his oars, piercing the launch in many places, and cut the barrel off the musket which he was firing at the rebels. Only one man was struck and he wounded but slightly. The crew of the boat were all black but two, and P. Mullen, boatswain's mate of the U. S. S. *Don*, and Aaron Anderson, landsman (colored), of the *Wyandank*, are reported to me by Acting Ensign Summers as having assisted him gallantly—Mullen lying on his back while loading the howitzer and then firing so carefully as to kill and wound many rebels, besides driving them all away, as was clearly seen from the other side of the creek, where our shore party were marching up.

At 5 p. m. the point near to where the *Stepping Stones* was aground was fortified and held through the night. The force kept a careful watch all night. At daybreak the pickets were driven in and we quickly formed to receive the rebels, who were seen coming in two columns toward our line, but after taking a good look at us retired as quickly as they came; why I know not, unless they had hoped to surprise us, which they failed in doing.

The officers and men during these two days' hard duty behaved in the best manner, and I was proud to be with such active, obedient men.

Acting Ensign Brice was my executive officer, and I owe to him specially my thanks for his untiring zeal, and every other officer doing his duty so well. I recommend them favorably to your notice.

I give here a statement of the force I had with me ashore and in the march.

From the U. S. S. Don.—Acting Ensigns Brice, Edmunds, Hallock, Hoar, Eastman; Acting Third Assistant Engineer Bowie; Acting Master's Mate Beam; Captain's Clerk Lorigan, 51 sailors, 14 marines.

From the U. S. S. Stepping Stones.—Acting Ensign Hartford, Acting Master's Mate Reid, and 30 sailors.

From the U. S. S. Heliotrope.—Acting Ensigns Dyson and Pyne and 20 sailors.

From the U. S. S. Wyandank.—Acting Ensign Summers and 20 sailors.

During the night of the 17th Acting Ensigns Saunders [G. L. Sands] and Cline and 22 men from the U. S. S. *Anacostia* were brought on shore in addition to the above-mentioned force.

The only loss I have to report is one saber bayonet, and the only casualties are T. Buckley, ordinary seaman, seriously wounded in the leg by an accidental thrust of a bayonet, and Robert Lee, landsman, slightly wounded while in the launch.

Respectfully,

T. H. EASTMAN,
Lieutenant-Commander, U. S. Navy, Commanding U. S. S. Don.

Commander F. A. PARKER,
Commanding Potomac Flotilla.

Report of Lieutenant-Commander Eastman, U. S. Navy, commanding U. S. S. Don, stating injuries done to the property of Mrs. Sutton, Montross, Va.

U. S. S. DON,
Potomac River, March 21, 1865.

SIR: In obedience to your order I make the following statement of injuries done to the place of Mrs. E. A. Sutton, Montross, Westmoreland County, Va.

In preparing for the attack of the rebels while we were encamped on her place I ordered the cutting down of about ten small trees, and two sides of a fence, each about 100 feet long, for the purpose of constructing abatis; also, I ordered the destruction of a small shed which was in our front.

I am not aware of any other injuries. I wish to state that Mrs. Sutton received us kindly and loyally and gave me information which prevented about thirty of our men falling into an ambuscade which would have injured my force materially.

Very respectfully, your obedient servant,

T. H. EASTMAN,
Lieutenant-Commander, Commanding U. S. S. Don.

Commander FOXHALL A. PARKER,
Commanding Potomac Flotilla.

Report of Commander Parker, U. S. Navy, commanding Potomac Flotilla, recommending Acting Ensign Summers, U. S. Navy, for promotion for gallant action in Mattox Creek, Virginia.

U. S. S. DON,
Potomac Flotilla, April 29, 1865.

SIR: I have the honor to recommend to the Department for conspicuous gallantry in action on the 17th ultimo, at Mattox Creek, Virginia, Acting Ensign William H. Summers, who, at that time in charge of a

howitzer launch, succeeded in destroying three schooners and a large barge under the heavy musketry fire of a force of rebels estimated to be about 400 strong.

Many oars of the launch were cut to pieces, the gunwale of the boat pierced in several places, and the barrel of the musket which Mr. Summers carried cut in two by a rifle ball.

I would most earnestly request that Acting Ensign Summers be made a master for his conduct and bravery.

I am, sir, very respectfully, your obedient servant,

FOXHALL A. PARKER,
Commander, Commanding Potomac Flotilla.

Hon. GIDEON WELLES,
Secretary of the Navy, Washington, D. C.

[Telegram.]

NAVY DEPARTMENT, *March 20, 1865.*

Send *Little Ada* to Potomac Flotilla.

G. WELLES,
Secretary of the Navy.

Captain J. M. BERRIEN,
Commandant Naval Station, Norfolk, Va.

Report of Commander Parker, U. S. Navy, commanding Potomac Flotilla, regarding movement of gunboats.

U. S. S. DON,
Potomac Flotilla, March 21, 1865.

SIR: Your communication of the 16th instant, referring to the request of Lieutenant-General Grant, is received, and I have the honor to inform you that gunboats have been sent to aid the places mentioned in his request.

Very respectfully, your obedient servant,

FOXHALL A. PARKER.
Commander, Commanding Potomac Flotilla.

Hon. GIDEON WELLES,
Secretary of the Navy.

Report of two officers of the U. S. S. Morse, regarding the movements of a party of marines from the C. S. ram Virginia.

U. S. S. MORSE, *March 21, 1865.*

SIR: In obedience to orders we proceeded to the southern shore, to communicate with a flag of truce. From the persons bearing it we gained the following information, viz:

That the rebel marines in this vicinity are a part of the crew of the rebel ram *Virginia.* They claim to be 80 in number, but our informant thinks there are not more than 30, who are on the north side of the Rappahannock in Lancaster County, opposite Lockley's Creek. Three of this number crossed to Lockley's Creek on the south side of the river yesterday afternoon. They were taken across by David Pinn, a free negro. Our informant did not know whether he assisted them voluntarily or not, but thinks he was paid for his services. The rest of these

marines are ready to cross to the south side of the river at any time. The three men who crossed to the south side impressed all the horses and boats in the neighborhood. The reason they assigned for taking the boats was that they needed them for the purpose of making a raid on the small gunboats, in hopes of capturing one of them.

The battery which opened on the U. S. steamers *Morse* and *Mosswood* on the 13th instant [consisted] of two small siege guns, manned by about 100 old men and young boys. Besides this battery there is a small squad of cavalry. The battery and cavalry are encamped at Dunnsville, just back of Fort Lowry.

The cavalrymen who made their appearance in the open field near the earthwork on the 13th instant were killed by the explosion of a shell after reaching the woods.

Very respectfully, your obedient servants,

JAMES H. DELANO,
Acting Ensign.
CHAS. A. MCDANIEL,
Acting Assistant Paymaster.

GEO. W. HYDE,
Acting Master, Commanding U. S. S. Morse.

Report of Acting Volunteer Lieutenant Nickerson, U. S. Navy, commanding U. S. S. Wyandank, of the seizure of schooner Champanero, of Baltimore.

U. S. STORESHIP WYANDANK,
St. Inigoes Creek, Maryland, March 21, 1865.

SIR: I have the honor to make the following report:

On the 14th instant, in St. Inigoes Creek, I boarded the schooner *Champanero*, from Baltimore, with an assorted cargo of merchandise, liquors, provisions, etc. Upon examining the manifest I found the following endorsement on it:

PORT OF ST. MARY'S, *March 13, 1865.*

Examined the within and found correct. The vessel has permission to proceed and land her cargo.

TENNISON, *Deputy Collector.*

I then took the manifest and commenced to examine the cargo and compare it with the manifest. I found that the cargo and manifest did not agree, and that one-half or more of the cargo was not on the manifest. I also found a quantity of powder on board, neither permitted nor manifested, consequently I seized the vessel. Upon examining all the papers found on board, I found bills of goods, liquors, etc., to the amount of near $4,000 for this same Tennison, deputy collector, and I think that it is very wrong for a custom-house collector to endorse a manifest to be correct when it is proven to be all wrong. It would have a tendency to induce a boarding officer to pass the vessel without strict search.

Very respectfully, your obedient servant,

S. NICKERSON,
Acting Volunteer Lieutenant, Commanding.

Commander F. A. PARKER,
Commanding Potomac Flotilla.

Respectfully submitted to the Department.

FOXHALL A. PARKER,
Commander, Commanding Potomac Flotilla.

Letter from the Secretary of the Navy to Commander Parker, U. S. Navy, commanding Potomac Flotilla, regarding blockade runners.

NAVY DEPARTMENT, *March 23, 1865.*

SIR: A person writing from New York under date of the 11th instant, who withholds his name, but states how he can be addressed, says that he is confident that one vessel, if not more, is loading with contraband goods to be landed on the Potomac somewhere in the vicinity of Smith's Point, and intends, if a chance offers, to run into the Yeocomico. He does not give the names of the vessels.

Very respectfully, etc.,

G. WELLES,
Secretary of the Navy.

Commander F. A. PARKER,
Commanding Potomac Flotilla, Washington.

Letter from Major-General Ord, U. S. Army, commanding Army of the James, to the Secretary of the Navy, advising the patrol of York River to prevent the use of the fisheries by the enemy.

HDQRS. DEPARTMENT OF VIRGINIA, ARMY OF THE JAMES,
Before Richmond, Va., March 24, 1865.

In reply to a communication* of Commander Parker, commanding Potomac Flotilla, to the Navy Department, and transmitted through the Secretary of War and headquarters Armies of the United States to me, in reference to an alleged trade across the York River from Gloucester, Va., by disloyal persons, with a sutler by the name of Gallagher, I have the honor to state that previous to the receipt of this communication I had ordered Mr. Gallagher's store closed up. Mr. Gallagher has been an authorized sutler in this department and has been under the surveillance of the commander of the post and provost-marshal at Yorktown, but I had ordered him closed to prevent the temptations to any attempt at an unwarrantable trade and intercourse with a rebellious region.

In regard to the oyster trade, I have already written a communication to Commander Parker upon this subject. The value of these fisheries to the Government is of little importance compared with their value to the rebels. By contracting the lines within which oyster boats were permitted to fish, we have relinquished to the rebels a source of supplies, and even now shad are advertised in the Richmond papers, which could not, I think, have come from elsewhere than the York and Pamunkey rivers. The gunboats, it seems to me, could not be better and more legitimately employed than in patrolling and guarding the York River above the oyster beds and cutting off the use of these and other fisheries from the use of the rebels and giving protection to such of our loyal people and negroes as have derived their maintenance from them heretofore.

Very respectfully, your obedient servant,

E. O. C. ORD,
Major-General of Volunteers, Commanding.

Hon. GIDEON WELLES,
Secretary Navy.

---

*See pp. 524, 525.

Order of the Secretary of the Navy to Acting Master Coffin, U. S. Navy, commanding U. S. S. Adela, to join the Potomac Flotilla.

NAVY DEPARTMENT, *March 29, 1865.*

SIR: Proceed with the U. S. S. *Adela* to St. Mary's, Md., and report to Commander F. A. Parker for duty in the Potomac Flotilla.

Very respectfully, etc.,

G. WELLES,
Secretary of the Navy.

Acting Master EDWIN COFFIN,
Commanding U. S. S. Adela, New York.

Report of Commander Parker, U. S. Navy, commanding Potomac Flotilla, of the capture by U. S. S. Mystic, of a canoe containing tobacco.

U. S. S. DON,
Potomac Flotilla, March 31, 1865.

SIR: I have the honor to inform the Department that on the night of the 19th instant Acting Master Wright, commanding the U. S. S. *Mystic*, captured on the North River a large canoe and 17 boxes of tobacco, which were just about to be shipped to run the blockade.

The tobacco I have divided among the captors, and shall use the boat for public service at the depot at St. Inigoes.

I am, sir, very respectfully, your obedient servant,

FOXHALL A. PARKER,
Commander, Commanding Potomac Flotilla.

Hon. GIDEON WELLES,
Secretary of the Navy.

Letter from the Secretary of the Navy to Commander Parker, commanding Potomac Flotilla, transmitting report of Lieutenant-Commander Wells, U. S. Navy, commanding U. S. S. Galena, regarding the capture of the schooners St. Mary's and J. B. Spafford by a party of Confederates under John C. Braine, March 31, 1865.

NAVY DEPARTMENT, *April 7, 1865.*

SIR: I herewith transmit for your information a copy of the report of Lieutenant-Commander C. H. Wells, of the U. S. S. *Galena*, relative to the capture on the 31st ultimo of the schooner *St. Mary's*, by a party of armed rebels in the Chesapeake Bay.

Respectfully,

G. WELLES,
Secretary of the Navy.

Commander FOXHALL A. PARKER,
Commanding Potomac Flotilla, Navy Yard, Washington, D. C.

[Enclosure.]

U. S. S. GALENA,
Delaware Breakwater, April 4, 1865.

SIR: I arrived here yesterday afternoon, and this morning the inspector of customs, Lewistown [Lewes?], Del., informed me that the schooner *St. Mary's*, of St. Mary's, Md., was captured in Chesapeake Bay near Patuxent River, on the 31st ultimo, by a yawl containing twenty armed rebels, commanded by Lieutenants Braine and Murdock. The captured schooner, the *St. Mary's*, got to sea that night or

next morning and captured another schooner, the *J. B. Spafford*, bound to New York, and last from Wicomico. The crew and two passengers of the *St. Mary's* were put on board of the *J. B. Spafford* (having been released). She arrived here yesterday afternoon. At the time of her capture she was off Hog Island. The *St. Mary's* was last seen by the released crew heading to the south, with the wind from the northward, on the night of the 1st instant, and they report that there was a light in a southeasterly direction, which they supposed was a vessel the rebels had captured and set fire to. The *St. Mary's* is a Baltimore-built schooner of 115 tons, and had an assorted cargo valued at $20,000.

Braine, the rebel commander of the piratical yawl, informed the master of the schooner *Spafford* that he was going to St. Marks, Fla.

The crews of the *St. Mary's* and *Spafford* were generally robbed of their personal effects.

The rebel party took the *St. Mary's* by surprise, reporting that they were in a sinking condition, when they came alongside.

I shall proceed to sea to-day.

Respectfully, your obedient servant,

C. H. WELLS,
Lieutenant-Commander.

Hon. GIDEON WELLES,
Secretary of the Navy, Washington City.

Report of Acting Volunteer Lieutenant-Commander Hooker, U. S. Navy, commanding First Division Potomac Flotilla, regarding reported movements of a party of Confederates under Captain Fitzhugh.

U. S. S. COMMODORE READ,
Rappahannock River, Virginia, April 3, 1865.

SIR: I have just received information that Captain Fitzhugh, with quite a number of men and some boats, is at Robinson's Creek, just above Urbana. It is said their intention is to make an attack on us, but I think it much more likely they intend depredations in the bay, or possibly the putting down of torpedoes. As I understand you are to be here in a few days, I shall not make any movement toward dislodging them until you come. In the meantime I will try to get more information.

Very respectfully, your obedient servant,

EDW. HOOKER,
Actg. Vol. Lieut. Comdr., U. S. N., Comdg. 1st Div. Potomac Flotilla.

Commander F. A. PARKER, U. S. Navy,
Commanding Potomac Flotilla.

Capture of transport steamer Harriet De Ford in Chesapeake Bay by a party of Confederates under Captain Fitzhugh, C. S. Army.

[Telegram.]

ANNAPOLIS, MD., *April 5, 1865.*
(Received 9:20 a. m.)

Steamer *Harriet De Ford* was captured at Fair Haven, in Chesapeake Bay, 30 miles below here, at 2 o'clock this morning, by a rebel party of 27, headed by Captain Fitzhugh. She is a one-masted propeller, upper works painted drab. The captain, mate, and white passengers were released; the crew taken. She immediately sailed after a propeller

towing two Government barges down the bay. Have nothing here to send in pursuit. Have telegraphed to commanding officer at Fortress Monroe, Point Lookout, and Baltimore.

F. D. SEWALL,
Colonel, Commanding District.

Lieutenant-Colonel J. H. TAYLOR,
Chief of Staff.

[Telegram.]

BALTIMORE, MD., *April 5, 1865.*
(Received at Washington 11:40 a m.)

I am just informed that two vessels have been captured by the rebels, the *Harriet De Ford* last night in Herring Bay, and the *St. Mary's* on the 1st of April, at the mouth of the Patuxent River. I have no small steamer to dispatch to look after them. Could you not dispatch two light draft steamers, either from Potomac Flotilla or Hampton Roads, to put a stop to this business?

Respectfully,

T. A. DORNIN,
Commodore.

Hon. G. WELLES,
[*Secretary of the Navy.*]

[Telegram.]

NAVY DEPARTMENT, *April 5, 1865.*

The steamer *Harriet De Ford* was captured at Fair Haven, in Chesapeake Bay, 30 miles below Annapolis, at 2 o'clock this morning, by a rebel party. She is a one-masted propeller, upper works drab. She immediately went in pursuit of another steamer in sight. Use your best exertions to recapture the steamer or overtake the rebel party.

GIDEON WELLES,
Secretary of the Navy.

Commander F. A. PARKER,
Commanding Potomac Flotilla, St. Mary's, Md.

[Telegram.]

POINT LOOKOUT, *April 5, 1865—1:20 p. m.*

Dispatch received. I am off and have sent ten more vessels in pursuit of the *Harriet De Ford.*

F. A. PARKER,
Commanding Potomac Flotilla.

Hon. GIDEON WELLES,
Secretary of the Navy.

Order of Commander Parker, U. S. Navy, commanding Potomac Flotilla, to Acting Volunteer Lieutenant-Commander Hooker, U. S. Navy, commanding First Division.

U. S. S. DON,
Potomac Flotilla, April 5, 1865.

SIR: The transport *Harriet De Ford* has been captured in Chesapeake Bay by a party of rebels. You will therefore be particularly

careful in overhauling all steamers and be prepared to sink the *De Ford* should you fall in with her.

Your station during the night and until further orders will be from the Rappahannock to Wolf Trap light-boat, and the following are the vessels of your command which you will dispose of as, in your judgment, you may think proper, viz: *Commodore Read, Yankee, Bell, Cœur de Lion.*

Respectfully, yours,

FOXHALL A. PARKER,
Commander, Commanding Potomac Flotilla.

Acting Volunteer Lieutenant-Commander E. HOOKER,
U. S. S. Commodore Read.

[Endorsement on envelope.]

The *Harriet De Ford* is a one-masted propeller, upper works drab. She immediately went in pursuit of another steamer in sight.

G. E. MCCONNELL,
Chief of Staff.

Be particular that your vessels carry their running lights so that they may be taken for merchant vessels.

F. A. P.,
Commander, Commanding.

Order of Commander Parker, U. S. Navy, commanding Potomac Flotilla, to Lieutenant-Commander Eastman, U. S. Navy, commanding U. S. S. Don.

U. S. S. DON,
Potomac Flotilla, April 5, 1865.

SIR: The transport *Harriet De Ford* has been captured in Chesapeake Bay by a party of rebels. You will therefore be particularly careful in overhauling all steamers and be prepared to sink the *De Ford* should you fall in with her.

Your station during the night and until further orders will be from Point Lookout to Hooper Island, and the following are the vessels of your command which you will dispose of as, in your judgment, you may think proper, viz: *Don, Currituck, Nansemond, Freeborn, Mercury.*

Respectfully, yours,

FOXHALL A. PARKER,
Commander, Commanding Potomac Flotilla.

Lieutenant-Commander T. H. EASTMAN,
U. S. S. Don.

Instructions of Commander Parker, U. S. Navy, commanding Potomac Flotilla, to Acting Volunteer Lieutenant-Commander Hooker, U. S. Navy, commanding First Division, regarding a search for transport steamer Harriet De Ford.

U. S. S. DON,
Point Lookout, April 6, 1865.

SIR: I have neither heard nor seen anything more of the *Harriet De Ford.* She must [be] lurking somewhere on the eastern shore.

Send the *Putnam* to Mobjack Bay, where she will probably find the *Western World.* Let them examine everything near that vicinity, and caution the captain of the *Putnam* to be very particular in allowing vessels to come near him.

During the day send your vessels out into the bay and overhaul everything passing, and at night take the same station as last night.

Respectfully, yours,

FOXHALL A. PARKER,
Commander, Commanding Potomac Flotilla.

Acting Volunteer Lieutenant-Commander E. HOOKER,
U. S. S. Commodore Read.

Report of Acting Volunteer Lieutenant-Commander Hooker, U. S. Navy, commanding First Division Potomac Flotilla.

U. S. S. COMMODORE READ,
Indian Creek, Virginia, April 6, 1865.

SIR: We have holed the rat, but can't get at him; he is in Indian Creek. The *Cœur de Lion* and *Heliotrope* are coming here.

Very respectfully, your obedient servant,

EDW. HOOKER,
Actg. Vol. Lieut. Comdr., U. S. N., Comdg. 1st Div. Potomac Flotilla.

Commander F. A. PARKER, U. S. Navy,
Commanding Potomac Flotilla.

[Telegram.]

POINT LOOKOUT, *April 6, 1865—5 p. m.*

Harriet De Ford is in Indian Creek, Virginia, blockaded by several of my gunboats. As soon as the light-draft boats get up she will be recaptured or destroyed.

Respectfully,

F. A. PARKER,
Commander, Commanding Potomac Flotilla.

Hon. G. WELLES,
Secretary of the Navy.

Order of Commander Parker, U. S. Navy, commanding Potomac Flotilla, to Acting Volunteer Lieutenant Commander Hooker, U. S. Navy, commanding First Division, to capture or destroy steamer Harriet De Ford.

U. S. S. DON,
Potomac Flotilla, April 6, 1865.

SIR: I send you the *Mercury*, *Freeborn*, *Yankee*, and *Currituck*.

The *Cœur de Lion* and *Heliotrope* draw less water than the *Harriet De Ford*, and the *Currituck* about the same. These vessels, with the *Freeborn*, will be enabled to go up the creek. Let them recapture or destroy the *Harriet De Ford* without a moment's delay. Be careful to preserve your whole blockade as usual.

The *Harriet De Ford*, filled with men, may attempt to carry the gunboats by boarding; let them be prepared for this.

So soon as the *Harriet De Ford* is captured or destroyed, send to me at St. Inigoes the *Jacob Bell*, *Freeborn*, *Heliotrope*, *Cœur de Lion*, *Stepping Stones*.

Respectfully, yours,

FOXHALL A. PARKER,
Commander, Commanding Potomac Flotilla.

Acting Volunteer Lieutenant-Commander E. HOOKER,
U. S. S. Commodore Read.

[Endorsement on envelope.]

I have just learned that the *De Ford* is in Diamond [Dimer's] Creek. I hear this from the engineer of the *Harriet De Ford*, who says that the vessel is partially destroyed. Be careful that you are not deceived with regard to their situation, and recapture or destroy her without delay.

F. A. PARKER,
Commander, Commanding Potomac Flotilla.

Lieutenant-Commander HOOKER.

The engineer just made his escape from the vessel.

Report of Acting Volunteer Lieutenant-Commander Hooker, U. S. Navy, commanding First Division Potomac Flotilla, regarding destruction of steamer Harriet De Ford.

U. S. S. COMMODORE READ,
Rappahannock River, Virginia, April 7, 1865.

SIR: In obedience to your orders of April 5, I cruised off the mouth of the Rappahannock and Piankatank rivers during the night, overhauling a number of steamers and sailing vessels. At daylight in the morning I communicated with the *Jacob Bell* (which vessel had been left in the Rappahannock River), and received from her Simon Brown and James Hudson, two of the crew of the captured steamer *Harriet De Ford*. From them I obtained the information that the captured steamer was in Indian Creek. I at once proceeded to that place, taking with me the *Cœur de Lion* and *Heliotrope*. The *Yankee* I dispatched to you with the information that the steamer was in the above-named creek. On the arrival of the *Cœur de Lion*, Captain Nelson said he could pilot me in, and I at once entered the creek, but had only proceeded a mile or so when the *Cœur de Lion* grounded so hard and fast that it required all the power of the *Read* to pull her off. In the meantime the *Heliotrope* arrived, as did also the *Freeborn*, having been spoken by the *Yankee* and informed of the state of affairs here. On board the *Heliotrope* I found a pilot who knew the channels of these creeks well. I therefore directed her to lead the way, using the same signal with regard to depth of water that you instituted on a previous occasion on the Rappahannock River. In this manner I proceeded up the creek to as high a point as I could reach in this vessel, say about 5 miles, the light drafts going from 1 to 2 miles farther than I could carry the *Read*, all of us shelling woods and suspicious places. While there we took on board a number of contrabands, among them one of the crew of the captured steamer. By them we were informed that the captured steamer was in Dimer's Creek instead of Indian Creek. I immediately made signals for the vessels to return, which they did, and I directed the *Freeborn* and *Cœur de Lion* to proceed at once to Dimer's Creek, while I detained the *Heliotrope* to pilot me out of Indian Creek and into Dimer's Creek, a service which was most satisfactorily performed, her pilot carrying me to a higher point in each creek than any other gunboat of equal draft has ever before attained. At Dimer's Creek we found the wreck of the captured steamer fired by the enemy and burned to the water's edge. She was still burning when we boarded her.

Her boiler and machinery were fired into by the *Freeborn* and other boats, and it is believed were effectually destroyed. As night approached I withdrew my forces and returned to Rappahannock River.

Contrabands which I have report that the negroes captured in the steamer were taken to Kilmarnock and sold at auction yesterday afternoon. I would respectfully suggest that there are many rank rebels, male and female, within our reach who might be seized as hostages for these negroes.

Very respectfully, your obedient servant,

EDW. HOOKER,
Actg. Vol. Lieut. Comdr., U. S. N., Comdg. 1st Div. Potomac Flotilla.

Commander F. A. PARKER, U. S. Navy,
Commanding Potomac Flotilla.

[Telegram.]

ST. INIGOES, *April 9, 1865—12:30 p. m.*

When the gunboats got in sight of the *Harriet De Ford* she was in flames. She was burned to the water's edge.

F. A. PARKER,
Commanding.

Hon. GIDEON WELLES,
Secretary of Navy.

Report of Acting Volunteer Lieutenant-Commander Hooker, U. S. Navy, commanding First Division Potomac Flotilla, giving account of the capture by the Confederates of steamer Harriet De Ford.

U. S. S. COMMODORE READ,
Rappahannock River, April 13, 1865.

SIR: The two negroes from the *Harriet De Ford* state that one of the persons engaged in the capture was John Turpin, son of Sewell Turpin, of Worcester County, Md. He lived in Poplartown, between Newark and Berlin; knew him by having either belonged to or worked for his father. Another one was Robert Hudgins, living somewhere about the lower part of the Haven (Milford Haven), in Mathews County, Va.; did not know any others. There were about eight or ten of the captors. They took the boat near the wharf, stopped her, blew the whistle, and the rest came on board in boats, armed with muskets, etc.

The captain piloted the boat out and was then sent on shore; the boat which landed him did not return. They brought three boats to the creek, two of the steamer's and one of their own.

They got a pilot to take them into the creek, got aground several times, and threw some of the cargo overboard.

When the negroes left they were discharging the cargo rapidly, the farmers in the neighborhood helping.

Very respectfully, your obedient servant,

EDW. HOOKER,
Actg. Vol. Lieut. Comdr., U. S. N., Comdg. 1st Div. Potomac Flotilla.

Commander F. A. PARKER, U. S. Navy,
Commanding Potomac Flotilla.

[Telegram.]

NAVY DEPARTMENT, *April 5, 1865.*

Send immediately a picket launch or Greek alphabet steamer to join the Potomac Flotilla.

G. WELLES,
Secretary of the Navy.

Rear-Admiral D. D. PORTER,
Comdg. North Atlantic Blockading Squadron, City Point, Va.

Report of Commander Parker, U. S. Navy, commanding Potomac Flotilla, regarding rumored plan for the capture of steamer Highland Light, of Baltimore.

U. S. S. DON
Potomac Flotilla, April 7, 1865.

SIR: I am informed by the engineer of the *Harriet De Ford*, recently captured by the rebels, that while a prisoner on the northern neck of Virginia he learned that parties were organizing for the purpose of capturing vessels on the bay, and that an attempt would be made to seize the *Highland Light*, a steamer running between West River and Baltimore. This report is confirmed by refugees, who assert that the object of the rebels is to burn and pillage generally. I am led to believe that an attempt will be made to burn the bridges over Gunpowder and Bush rivers, and to destroy the boat belonging to the railroad company at Havre de Grace.

Very respectfully,

FOXHALL A. PARKER,
Commander, U. S. Navy, Commanding Potomac Flotilla.

Hon. GIDEON WELLES,
Secretary of the Navy, Washington, D. C.

Letter from the Secretary of the Navy to Commander Parker, U. S. Navy, commanding Potomac Flotilla, regarding measures for protection against capture of vessels in Chesapeake Bay.

NAVY DEPARTMENT, *April 7, 1865.*

SIR: Your communication of this date has been received. Rear-Admiral Porter has been instructed to station three vessels outside the capes and send to you such light-draft steamers as he can spare, not exceeding six.

In view of the information gained it would seem prudent to dispatch a vessel to each of the points named, the Gunpowder [River], etc., to guard [against] the designs of the rebels.

A copy of your report has been communicated to the Secretary of War, with a suggestion whether it would not be well to scour the northern neck of Virginia by a military force. In the event of the suggestion being carried out, you will afford all desired cooperation within your power.

Very respectfully, etc.,

G. WELLES,
Secretary of the Navy.

Commander F. A. PARKER,
Commanding Potomac Flotilla, Washington.

Order of the Secretary of the Navy to Commander Parker, U. S. Navy, Commanding Potomac Flotilla, regarding launch No. 6.

NAVY DEPARTMENT, *April 8, 1865.*

SIR: You are informed that the launch *No. 6* will be ready at Norfolk, Va., for transfer to the squadron under your command on the 10th instant. You will send such officers as may be required to her.

Very respectfully,

G. WELLES,
Secretary of the Navy.

Commander F. A. PARKER,
Commanding Potomac Flotilla, Washington, D. C.

Letter from Acting Volunteer Lieutenant-Commander Hooker, U. S. Navy, commanding First Division Potomac Flotilla, to Mr. Flippo, giving assurance of all possible protection.

U. S. S. COMMODORE READ,
Rappahannock River, Virginia, April 8, 1865.

SIR: Your letter has been received. In reply I will say that I know you and your political status, as I believe I do every other man in Lancaster County. On entering the creek the other day I passed an especial order to every vessel in my fleet that they were not to fire on your house unless the enemy should make their appearance in that vicinity. The same order was also passed in regard to Mr. Carter, on Indian Creek (of which please inform him). You will distinctly understand, however, that when scoundrels commit depredations innocent people are liable to be made to suffer, and that when Fitzhugh and other rascals of his stamp get the opportunity to bring Federal vengeance upon innocent persons they are only too greatly rejoiced to do so, hoping thereby to alienate some neutral-minded persons from the old flag. If necessity requires that I should punish a community, I shall do so without regard to age or sex or any other consideration. In the meantime believe me that men of your stamp will not be molested unless the exigencies of war compel me to do so.

Very respectfully, your obedient servant,

EDW. HOOKER,
Actg. Vol. Lieut. Comdr., U. S. N., Comdg. 1st Div. Potomac Flotilla.

Mr. FLIPPO.

Order of Commander Parker, U. S. Navy, commanding Potomac Flotilla, to Acting Volunteer Lieutenant-Commander Hooker, U. S. Navy, commanding First Division, regarding vessels of his command.

U. S. S. DON,
Potomac Flotilla, April 9, 1865.

SIR: I will be at the Rappahannock to-morrow evening, and should I not get there before dark, send the *Yankee* out to the buoy and let her await me.

The following is the disposition of the vessels, and you will see that all the vessels now in the Rappahannock are in proper condition and on their stations:

Rappahannock.—Don, Yankee, Nansemond, Heliotrope, Commodore Read, Currituck, General Putnam, and *Stepping Stones.*

Wicomico and Smith's Point light-boat.—Morse and *Dragon.*

Piankatank.—Mercury.

Wolf Trap.—Periwinkle.

I have ordered the *Putnam* to report to you from York River.

Respectfully, yours,

FOXHALL A. PARKER,
Commander, Commanding Potomac Flotilla.

Acting Volunteer Lieutenant-Commander E. HOOKER,
U. S. S. Commodore Read.

Have all the vessels coaled, and be particular that the vessels which are to remain outside are coaled for at least ten days.

F. A. P.

Report of Commander Parker, U. S. Navy, commanding Potomac Flotilla, regarding gunboats sent to Havre de Grace, Gunpowder and Bush rivers.

U. S. S. DON,
Potomac Flotilla, April 9, 1865.

SIR: In reply to your communication of the 7th instant, I have the honor to inform you that I have sent gunboats to Havre de Grace, Gunpowder and Bush rivers.

I will cooperate most heartily with any expedition sent to the northern neck of Virginia.

I am, sir, very respectfully, your obedient servant,

FOXHALL A. PARKER,
Commander, Commanding Potomac Flotilla.

Hon. GIDEON WELLES,
Secretary of the Navy.

Report of Commander Parker, U. S. Navy, commanding Potomac Flotilla, of the chase, by U. S. S. Little Ada, of boat containing eight armed men.

U. S. S. DON,
Potomac Flotilla, April 9, 1865.

SIR: I have the honor to report to the Department that on the night of the 6th instant the U. S. S. *Little Ada* chased a large yawl boat (with eight armed rebels in it) ashore at Hooper Strait, Md.

The boat was captured and brought off, and a party of seamen landed, who remained on shore ten hours searching for the rebels in vain.

The military authorities have been informed of the fact, and our gunboats are keeping a bright outlook for the enemy on the bay.

I am, sir, very respectfully, your obedient servant,

FOXHALL A. PARKER,
Commander, Commanding Potomac Flotilla.

Hon. GIDEON WELLES,
Secretary of the Navy.

Report of Acting Ensign Mintzer, U. S. Navy, commanding U. S. picket boat Zeta, of the arrival of that vessel at Bush River bridge, Maryland.

U. S. S. PICKET BOAT ZETA,
Bush River Bridge, Maryland, April 11, 1865.

SIR: I have the honor to report that I arrived here with the vessel under my command yesterday at 2 p. m. I found Lieutenant Boyce with a detachment of 15 men, belonging to the Eighth U. S. Infantry, guarding the bridge.

I conferred with [him] and instituted a code of night signals.

I have moored the *Zeta* to cover the approaches to the bridge along the railroad; also to cover the approach by water.

I learned that the telegraph station had been discontinued at this place; I reported by letter to Acting Master W. A. Arthur, commanding U. S. S. *Freeborn*, at Havre de Grace.

On my arrival, I was informed by Lieutenant Boyce that a sentry which he had posted on the west end of the bridge had been shot through the thigh; the man said he discovered the person who shot him while he was at a considerable distance. I enquired and found that this man's gun was loaded, but every evidence existed of its having been discharged and reloaded. Since my arrival everything has been quiet.

I am happy to be able to report favorably on the pilot you sent me. The entrance to this river is very narrow, and there are two bars at its mouth which lock; in some places I scarcely had 1 foot spare water coming in. He has given me much information about the different inlets about here, and I most respectfully request that you will permit me to retain him as long as you are pleased to keep me here.

All of which is respectfully submitted, by your obedient servant,

F. W. MINTZER,
Acting Ensign, Commanding.

Commander FOXHALL A. PARKER, U. S. Navy,
Commanding Potomac Flotilla.

Report of Commander Parker, U. S. Navy, commanding Potomac Flotilla, regarding raid of Mosby's guerrillas.

U. S. S. DON,
Potomac Flotilla, April 13, 1865.

SIR: Hearing on the 9th instant that a number of Mosby's guerrillas were retreating from the northern neck, taking with them a drove of cattle and a large number of wagons laden with forage, I telegraphed the information to Major-General Augur, and on the following day left the Potomac for Fredericksburg, where I arrived on the 12th instant, and learned to my chagrin that, no force having been sent from Washington to intercept them, the guerrillas (300 in number) had passed through Falmouth on the evening of the 11th instant, bound to Loudoun and Fauquier counties.

On my way up the Rappahannock several influential citizens called upon me to say that the inhabitants of Essex and Middlesex counties were ready to return to their allegiance to the Government, and at Fredericksburg I had a long unofficial interview with the mayor and three other gentlemen, who assured me that the people generally considered that with the surrender of General Lee and his army the rebellion was virtually at an end, and that they were therefore ready to

submit quietly to the requirements of the Government and to become good and loyal citizens. I do not quote the words used, but simply give the purport of the conversation.

The people are said to be in great need of food, clothing, and medicines, and I think that both humanity and sound policy would dictate the opening of the Rappahannock to trade, under military restriction, at the earliest practicable moment.

I have the honor to be, very respectfully, your obedient servant,

FOXHALL A. PARKER,
Commander, Commanding Potomac Flotilla.

Hon. GIDEON WELLES,
Secretary of the Navy.

Recovery of property captured on the steamer Harriet De Ford.

Report of Commander Parker, U. S. Navy, commanding Potomac Flotilla, of captures made in going up the Rappahannock River.

U. S. S. DON,
Potomac Flotilla, April 15, 1865.

SIR: On my way up the Rappahannock I captured a boat containing four persons, three of whom proved to be rebel soldiers and the fourth a blockade runner.

Having found two orders (in a carpetbag in the boat) from T. Fitzhugh, leader of the gang of guerrillas who captured the *Harriet De Ford*, to a Captain Henderson, to deliver certain goods belonging to said vessel to the blockade runner, I sent an expedition last night on shore and arrested Henderson, whom, with the others, I have turned over to the provost-marshal at Point Lookout, Md.

I have the honor to be, your obedient servant,

FOXHALL A. PARKER,
Commander, Commanding Potomac Flotilla.

Hon. GIDEON WELLES,
Secretary of the Navy.

Report of Acting Volunteer Lieutenant-Commander Hooker, U. S. Navy, commanding First Division Potomac Flotilla, regarding boats of the steamer Harriet De Ford.

U. S. S. COMMODORE READ,
Rappahannock River, Virginia, April 22, 1865.

SIR: I have on board the *Putnam* the boats of the steamer *De Ford*. Last Wednesday I saw a man from Kilmarnock who informed me that the people were desirous of returning such property from the steamer as they had. The gun he said he knew nothing about. The boats were by my direction returned to the wreck at Dimer's Creek, and the *Putnam* went up and got them. I shall send them by her when she comes.

Very respectfully, your obedient servant,

EDW. HOOKER,
Actg. Vol. Lieut. Comdr., U. S. N., Comdg. 1st Div. Potomac Flotilla.

Commander F. A. PARKER, U. S. Navy,
Commanding Potomac Flotilla.

Report of Commander Parker, U. S. Navy, commanding Potomac Flotilla, regarding return of property.

U. S. S. DON,
Potomac Flotilla, April 26, 1865.

SIR: I have the honor to report that in consequence of the arrest of a man named Henderson, mentioned in my letter of the 15th instant, the people in the neighborhood of Kilmarnock have expressed a desire to return the property stolen from the *Harriet De Ford*.

The boats have already been returned and the owners informed.

I am, sir, very respectfully, your obedient servant,

FOXHALL A. PARKER,
Commander, Commanding Potomac Flotilla.

Hon. GIDEON WELLES,
Secretary of the Navy.

Report of Acting Volunteer Lieutenant-Commander Hooker, U. S. Navy, commanding First Division Potomac Flotilla, of the recovery of the gun of the steamer Harriet De Ford.

U. S. S. COMMODORE READ,
Rappahannock River, Virginia, April 29, 1865.

SIR: I have the pleasure of reporting that the gun captured on the *De Ford* is on board my ship. It was recovered by me yesterday. It is a brass 6-pounder trunnioned piece, with the name "*H. De Ford*" on the reinforce.

Very respectfully, your obedient servant,

EDWARD HOOKER,
Actg. Vol. Lieut. Comdr., U. S. N., Comdg. 1st Div. Potomac Flotilla.

Commander F. A. PARKER, U. S. Navy,
Commanding Potomac Flotilla.

Letter from the Secretary of the Navy to Commander Parker, U. S. Navy, commanding Potomac Flotilla, regarding the owner of steamer Harriet De Ford.

NAVY DEPARTMENT, *May 3, 1865.*

SIR: I herewith transmit a letter addressed to me by B. De Ford, esq., of Baltimore, dated the 26th ultimo, who asks the protection of the flotilla to enable his men to recover anything that may be left of his steamer, the *Harriet De Ford*, which was captured by guerrillas and burned in Indian River.

Very respectfully, etc.,

G. WELLES,
Secretary of the Navy.

Commander F. A. PARKER,
Commanding Potomac Flotilla, Washington.

Report of Commander Parker, U. S. Navy, commanding Potomac Flotilla, of assistance rendered to owner of steamer Harriet De Ford.

U. S. S. DON,
Potomac Flotilla, May 5, 1865.

SIR: In reply to your letter of the 3d instant I have the honor to inform you that I have detailed a vessel to assist the owner of the *Harriet De Ford* in getting all that may be left of his steamer.

A brass gun belonging to that vessel was sent aboard the *Commodore Read* from Lancaster County, Va., a few days since, and is now at the depot at St. Inigoes. I have telegraphed its recovery to Mr. De Ford.

I am, sir, very respectfully, your obedient servant,

FOXHALL A. PARKER,
Commander, Commanding Potomac Flotilla.

Hon. GIDEON WELLES,
Secretary of the Navy.

Report of Acting Volunteer Lieutenant-Commander Hooker, U. S. Navy, commanding First Division Potomac Flotilla, of the removal of machinery and furniture from steamer Harriet De Ford.

U. S. S. COMMODORE READ,
Rappahannock River, Virginia, May 17, 1865.

SIR: The *Heliotrope* has returned from Dimer's Creek, the work on the *Harriet De Ford* being completed. All the machinery was removed, but the hull was not considered worth removing. The captain of the *Heliotrope* also reports that he recovered a considerable part of the furniture of the vessel, many articles being found in the possession of Mr. Henderson's family. He also thinks he has obtained some clew to the whereabouts of the gun captured from the picket launch. Perhaps I can get hold of it by making some threats to parties implicated, and with your permission I will try it.

At some convenient time I will take a look at the wreck of the picket launch; perhaps there may be something there worth saving.

Very respectfully, your obedient servant,

E. HOOKER,
Actg. Vol. Lieut.Comdr., U. S. N., Comdg. 1st Div. Potomac Flotilla.

Commander F. A. PARKER, U. S. Navy,
Commanding Potomac Flotilla.

General Orders of the Secretary of the Navy announcing the death of the President of the United States.

GENERAL ORDERS, No. 51. } NAVY DEPARTMENT, *Washington, April 15, 1865.*

The Department announces with profound sorrow to the officers and men of the Navy and Marine Corps the death of Abraham Lincoln, late President of the United States. Stricken down by the hand of an assassin on the evening of the 14th instant, when surrounded by his family and friends, he lingered a few hours after receiving the fatal wound and died at 7:22 this morning.

A grateful people had given their willing confidence to the patriot and statesman under whose wise and successful administration the nation was just emerging from the civil strife which for four years has afflicted the land, when this terrible calamity fell upon the country. To him our gratitude was justly due, for to him, under God, more than to any other person, we are indebted for the successful vindication of the integrity of the Union and the maintenance of the power of the Republic.

The officers of the Navy and Marine Corps will, as a manifestation of their respect for the exalted character, eminent position, and inestimable public services of the late President, and as an indication of

their sense of the calamity which the country has sustained, wear the usual badge of mourning for six months.

The Department further directs that upon the day following the receipt of this order, the commandants of squadrons, navy yards and stations will cause the ensign of every vessel in their several commands to be hoisted at half-mast, and a gun to be fired every half hour, beginning at sunrise and ending at sunset. The flags of the several navy yards and marine barracks will also be hoisted at half-mast.

GIDEON WELLES,
Secretary of the Navy.

[Telegram.]

NAVY DEPARTMENT, *April 15, 1865.*

If the military authorities arrest the murderer of the President and take him to the yard, put him on a monitor and anchor her in the stream, with strong guard on vessel, wharf, and in yard. Call upon commandant Marine Corps for guard. Have vessel immediately prepared ready to receive him at any hour, day or night, with necessary instructions. He will be heavily ironed and so guarded as to prevent escape or injury to himself.

GIDEON WELLES,
Secretary Navy.

Commodore J. B. MONTGOMERY,
Navy Yard, Washington.

[Telegram.]

ALEXANDRIA, *April 16, 1865.*
(Received at Washington 6:10 p. m.)

In the absence of Commander F. A. Parker, commanding Potomac Flotilla, I address myself to you direct.

By orders from Assistant Secretary of War, General Halleck, the military authorities of this place are ordered to stop all vessels from going down the river, and by request of military commander here I have cooperated, and so far as was desired detained certain vessels. I respectfully ask for instructions in the matter from you.

JAMES TAYLOR,
Acting Master, Commanding Guard Vessel off Alexandria.

Hon. GIDEON WELLES.

[Telegram.]

NAVY DEPARTMENT, *April 16, 1865.*

On Monday fire a gun in honor of the late President each half hour from sunrise to sunset. Keep all flags at half-mast until after the funeral. Officers will wear crape. General order by mail.

G. WELLES,
Secretary of the Navy.

Commander F. A. PARKER,
Potomac Flotilla, St. Inigoes, Md.

[Telegram.]

NAVY DEPARTMENT, *April 17, 1865.*

Search all vessels going out of the river for the assassins. Detain all suspicious persons. Guard against all crossing of the river and touching of vessels or boats on the Virginia shore.

GIDEON WELLES,
Secretary of the Navy.

Commander F. A. PARKER, U. S. Navy,
Commanding Potomac Flotilla, St. Inigoes, Md.

Report of Commander Parker, U. S. Navy, commanding Potomac Flotilla, of the arrest of noted guerrilla and spy Thomas N. Conrad.

U. S. S. DON,
Potomac Flotilla, April 17, 1865.

SIR: I have the honor to inform the Department that last night the U. S. S. *Jacob Bell* arrested a noted guerrilla and spy named Thomas N. Conrad, whom I have sent to Major-General Augur.

I am, sir, very respectfully, your obedient servant,

FOXHALL A. PARKER,
Commander, Commanding Potomac Flotilla.

Hon. GIDEON WELLES,
Secretary of the Navy.

Letter from Captain Drew, U. S. Army, to commanding officer of U. S. S. Commodore Read, regarding orders to search for the assassin of the President of the United States.

HEADQUARTERS ST. MARY'S DISTRICT,
OFFICE OF ASSISTANT ADJUTANT-GENERAL,
Point Lookout, Md., April 17, 1865.

The following telegram has just been received from Hon. E. M. Stanton, Secretary of War:

The murderers of the President and Mr. Seward are no doubt in the gang of rebels mentioned in your telegram. Have the navy vessels scour the coast, and spare no effort to arrest and hold them. Put your whole force on the work, as far as can be done with safety to your command.

Respectfully, your obedient servant,

C. H. DREW,
Captain Veteran Reserve Corps, Actg. Asst. Adjt. Gen.

COMMANDING OFFICER, U. S. S. [COMMODORE READ.]

Instructions of Acting Master Eldridge, U. S. Navy, commanding U. S. S. Delaware, to Acting Master Arthur, U. S. Navy, commanding U. S. S. Thomas Freeborn, regarding search for the murderer of the President of the United States.

U. S. S. DELAWARE,
Off Point Lookout, Md., April 17, 1865.

SIR: In consequence of information having been received that the murderer of the President has been seen in this vicinity, I would

request that you patrol the bay from Point Lookout to the mouth [of] Patuxent River, keeping a strict watch on the movements of all vessels and on any small boats that may attempt to leave the west shore of the bay.

All steamers bound down the bay you will hail, and order them to proceed to Point Lookout and remain until further orders.

I have sent the *Nansemond* to the Patuxent, and the *Mystic* and this vessel will patrol the bay in line across.

I am, sir, very respectfully, your obedient servant,

J. H. ELDRIDGE,
Acting Master, Commanding.

Acting Master W. A. ARTHUR,
Commanding U. S. S. Freeborn.

[Endorsement.]

I cruised last night in obedience to this order. Reported to Commander Parker this morning at Point Lookout. He instructed me to carry out your orders.

W. A. ARTHUR,
Commanding Freeborn.

Acting Volunteer Lieutenant-Commander E. HOOKER,
Commanding First Division.

[Telegram.]

NAVY DEPARTMENT, *April 17, 1865.*

Send any vessels that may be unemployed to blockade eastern shore of Virginia and Maryland coast from Point Lookout to Baltimore, reporting for further orders to senior officer of Potomac Flotilla between those points.

GIDEON WELLES,
Secretary Navy.

COMMANDING OFFICER OF NAVAL FORCE,
Hampton Roads, Virginia.

[Telegram.]

NAVY DEPARTMENT, *April 17, 1865.*

The War Department wishes special attention called this afternoon to order of Saturday relative to confining a prisoner. Keep boat in constant readiness and have such a guard at the gate that he can be safely got on board.

GIDEON WELLES,
Secretary Navy.

Commodore J. B. MONTGOMERY,
Commandant Navy Yard, Washington.

[Telegram.]

WASHINGTON, D. C., *April 22, 1865.*

Booth was near Bryantown last Saturday, where Dr. Mudd set his ankle, which was broken by a fall from his horse. The utmost vigilance is necessary in the Potomac and Patuxent to prevent his escape. All

boats should be searched for and destroyed and a daily and nightly patrol established along both shores. Inform the people that more than $100,000 are offered for him. Allow none of your vessels to leave except for search elsewhere.

GIDEON WELLES,
Secretary of Navy.

Lieutenant-Commander EASTMAN.

[Telegram.]

ST. MARY'S, MD., *April 22, 1865.*
(Received at Washington 9:50 p. m.)

Telegram received and [it] will be promptly obeyed. I have been cruising for the last four days off the Patuxent and neighborhood, and am going back immediately. I sent several suspicious persons to Baltimore in the *Nansemond*, one of whom is a man named Barnes. Provost-Marshal McPhail knows him. I would like to have the *Nansemond* returned to the Patuxent as soon as possible.

T. H. EASTMAN.

Hon. G. V. FOX.

[Telegram.]

NAVY DEPARTMENT, *April 22, 1865.*

Do not send the *Don* to Baltimore as ordered by Commander Parker.

GIDEON WELLES,
Secretary.

Lieutenant-Commander EASTMAN, U. S. Navy,
Point Lookout.

[Telegram.]

NAVY YARD, *April 23, 1865—12:30 p. m.*

I am just leaving the yard to go down the river. Am confident when you receive the report of my operations the past week you will find that a strict blockade has been kept by the flotilla.

F. A. PARKER,
Commander, Commanding Potomac Flotilla.

Hon. GIDEON WELLES,
Secretary of the Navy.

[Telegram.]

NAVY DEPARTMENT, *April 22, 1865.*

I have countermanded your order to send the *Don* to Baltimore. Join your command without delay and give effect by your presence to the prevention of boats leaving the Maryland shore. Allow no absences or cessation of vigilance on the part of officers or vessels. Your absence is strongly disapproved at this time.

GIDEON WELLES,
Secretary.

Commander F. A. PARKER, U. S. Navy,
Relay House.

[Telegram.]

RELAY HOUSE, *April 23, 1865.*
(Received at Washington 8:10 a. m.)

The *Don* being a good sea boat, and the Secretary of War having requested that the Maryland shore should be closely blockaded from Point Lookout to Baltimore, I sent her with other vessels to that station. I came on shore from the best motives, because I believed that in no other way could I control the movements of the whole flotilla. I have been in constant communication by telegraph with Washington, Baltimore, Annapolis, Point Lookout, and Cherrystone; have been directing everything and have enjoined upon all the utmost vigilance. I will join my command without delay.

F. A. PARKER,
Commander.

Hon. GIDEON WELLES,
Secretary.

Report of Commander Parker, U. S. Navy, commanding Potomac Flotilla, responding to the Department's telegram expressing disapproval of his absence from his command.

U. S. S. ELLA,
Potomac Flotilla, April 23, 1865.

SIR: In reply to your telegram of this date, I would respectfully state that on the 17th instant, when I was told by the honorable Secretary of War that Booth had been traced to Upper Marlborough, on the Patuxent River, and that he would like that river and the coast of Maryland from Point Lookout to Baltimore very carefully guarded, I said to you that I would assign Lieutenant-Commander Eastman to that duty with the *Don* and such other boats as I could spare from the Potomac, while I remained behind where I could be in communication with the Department and the whole flotilla. At the same time I suggested that boats should be ordered from Norfolk to cruise in the bay, and you directed me to tell Commander Wyman to issue orders to that effect.

I then made the following disposition of the vessels of my command: Ten gunboats and an armed sloop to patrol the Potomac from Mattawoman to its mouth, with orders to seize all boats; the monitor *Chimo* to remain at anchor at Point Lookout, while two gunboats cruised from the point due east to the eastern shore of Maryland, a distance of but 6 miles, intercepting all vessels bound down the bay, and sending them to General Barnes to be overhauled and detained; four fast boats to cruise along the coast of Maryland from Point Lookout to Annapolis; seven boats to guard the coast of Virginia from Point Lookout to York River; two boats in the York River; three on the eastern shore of Virginia, from Cherrystone to Smith's Island; one at Gunpowder [River]; one at Bush River; one at Havre de Grace. I gave orders to the commanders of all these vessels to act in concert and cooperate fully with the military authorities. I directed that the *Stepping Stones* should carry ammunition and provisions to the *Cœur de Lion* at Gunpowder, and that she should stop for me at Baltimore on her way thither, as I was anxious to see the disposition of the gunboats in that vicinity.

On Monday evening, after giving Commander Wyman my address, I went to my home, about ten or fifteen minutes' walk from the Relay, where I was in direct telegraphic communication with my command. I would here observe that I sent to the Relay regularly four times a

day, and that General Tyler, in command at that post, had courteously promised to send all important dispatches to me by an orderly. On Tuesday morning I received a telegram from St. Inigoes, informing me that the picket guard established by my order, about a quarter of a mile inshore of the depot, had been twice fired at during the previous night. I immediately ordered the guard doubled and all boats on the St. Mary's River seized, and thinking it best not to go in the *Stepping Stones*, went to Baltimore and directed the commander of that vessel to proceed to Gunpowder without me.

On Wednesday I again communicated with St. Inigoes, and found everything going on satisfactorily. On Thursday I visited the Navy Department, and on my return to the Relay in the evening telegraphed to Lieutenant-Commander Eastman to report in Baltimore on Saturday morning, as I wished to run along the entire line of gunboats in the Chesapeake and Potomac. This telegram had not been received yesterday morning, which shows conclusively, I think, how impossible it would have been for me to direct operations on the Potomac while cruising in the bay.

On Friday and Saturday I was in communication with St. Inigoes, Point Lookout, Yorktown, and Annapolis, and drew up and forwarded to the senior officer at Yorktown instructions in relation to trade at that point.

I feel well assured that the Potomac and Chesapeake have been vigilantly guarded, but twice the number of boats constituting this flotilla could not prevent a canoe from crossing at night from Maryland to Virginia.

It was this consideration which induced my suggestion to the honorable Secretary of War, in your presence, that a large cavalry force be sent to scour the northern neck, a suggestion which has but just been partially carried out by the sending of 200 horsemen to Coan River.

I have made the above plain statement of facts in order that the Department may see that, while at my home, I was not unmindful or neglectful of my duty. In Washington I could have done no more; on board the *Don* not so much.

During the whole of this accursed rebellion I have endeavored to do my duty faithfully and honestly to my Government and country, and feeling that I could perform no better service to either than by aiding in the apprehension of the vile assassin of our late lamented President, I am mortified and pained at the censure expressed in the Department's telegram. I earnestly trust, however, that upon a review of all the circumstances of the case the Department will be enabled to alter its opinion.

I have the honor to be, very respectfully, your obedient servant,

FOXHALL A. PARKER,
Commander, Commanding Potomac Flotilla.

Hon. GIDEON WELLES,
Secretary of the Navy.

Letter from the Secretary of the Navy to Commander Parker, U. S. Navy commanding Potomac Flotilla, censuring him for the escape of the assassin of the President.

NAVY DEPARTMENT, *April 28, 1865.*

SIR: The Department has received your communication of the 23d instant, reporting the measures taken by you to capture the assassin

of the late President and explaining why you were at your residence near the Relay House at so important a period.

Since it has been proved that the assassin has been in the vicinity of St. Inigoes, the headquarters of the Potomac Flotilla, it would seem that the place of the commander of the flotilla should have been there and not at his home. It is supposed that the villain passed out of that district while you were at your residence.

Very respectfully, etc.,

G. WELLES,
Secretary of the Navy.

Commander F. A. PARKER,
Commanding Potomac Flotilla, Washington.

Report of Acting Volunteer Lieutenant-Commander Hooker, U. S. Navy, commanding First Division Potomac Flotilla, regarding continued breach of blockade on the eastern shore.

U. S. S. COMMODORE READ,
Rappahannock River, Virginia, April 23, 1865.

SIR: In accordance with your telegraphic order, I have sent Acting Volunteer Lieutenant Commanding Livingston in the *Barney* to Yorktown to relieve the *Crusader*.

From the reports in circulation around the counties on this river, I should think that there must be something wrong in that region (Yorktown). I am told by parties on shore that boats are passing and repassing to and from the eastern shore; that goods are coming in, etc.

I do not know how much truth there is in the stories, and think they are told to me in the hopes of making me relax the blockade here; they will, however, have no effect on me. It is said the army authorities sanction the trade. I mention these as rumors only, and not as things of which I have any real knowledge, but think you ought to know even the rumors.

Very respectfully, your obedient servant,

E. HOOKER,
Actg. Vol. Lieut. Comdr., U. S. N., Comdg. 1st Div. Potomac Flotilla.

Commander F. A. PARKER, U. S. Navy,
Commanding Potomac Flotilla.

Report of Commander Parker, U. S. Navy, commanding Potomac Flotilla, regarding captures.

U. S. S. ELLA,
Potomac Flotilla, April 24, 1865.

SIR: I have the honor to inform you that I have this day sent to the provost-marshal at Washington four men, one woman, and child, arrested in attempting to cross the Potomac into Virginia.

I am, sir, very respectfully, your obedient servant,

FOXHALL A. PARKER,
Commander, Commanding Potomac Flotilla.

Hon. GIDEON WELLES,
Secretary of the Navy.

Report of Acting Volunteer Lieutenant-Commander Hooker, U. S. Navy, commanding First Division Potomac Flotilla, regarding the proposed raising of the United States flag in Mathews County, Va.

U. S. S. COMMODORE READ,
Rappahannock River, Virginia, April 26, 1865.

SIR: I deem it proper to report the following circumstances, which have transpired since my last communication to you:

On Sunday afternoon, after the *Putnam* had left, I received a note from Mathews County, signed by a Mr. Dixon, and purporting to have been written at the request of many citizens, informing me that on Tuesday, the 25th, a flag would be raised in that county, and inviting myself and officers to be present. On Monday morning I went into the Piankatank and communicated with several citizens on the matter, informing them that any such movement must be a voluntary act on their part, and that neither myself nor officers could attend, lest it should be reported by those opposed to the movement that it was done by my orders, etc. I also explained to them that the hoisting of the flag would not in any way relax the blockade, or grant any privileges in trading or passing or repassing through the blockade lines. I further said to them that in my opinion the better course would be to get the citizens of the county together in a public meeting, have a free interchange of sentiments, and then, if they thought best to raise a flag, to do so, and take the oath of allegiance to the U. S. Government. I also found that there was some opposition to the movement, and that my name had been used as authority for the raising of the flag. This I took especial pains to contradict. I then left the river and returned to the Rappahannock River. I have since been informed that the flag was hoisted on Tuesday and is still flying, there being a few men and a large number of women present; the more responsible portion of the citizens, I understand, accorded with my idea of having meetings, etc., first, and did not attend the flag raising.

While in the Piankatank I received an invitation to visit the house of the Reverend Mr. Towill, in Middlesex County. This gentleman is a consistent Union man, and has been so throughout the war. He had previously taken the oath on board my ship. Consequently I yesterday visited his place and met some of the principal citizens of this district of Middlesex County.

I found that they were endeavoring to get together a meeting at the county seat with a view to expediting the return of the State to her allegiance. I explained to them, as I had to the citizens of Mathews, that whatever they did there could be no privileges accorded to them until it was so ordered by competent authority. This seemed to be the view which they had entertained of it. They, however, both secessionists and Unionists, expressed the wish to take the oath of allegiance before making any movement, and, had I not received your note, I should have felt justified in administering it to them after the careful explanations I had made to them.

On my return to the ship, however, I found your note, and at once informed them that I could do nothing in the matter without further orders. The feeling in this portion of Middlesex County seems to be very harmonious, and I am informed it is so throughout the county. I am further informed that the secession flag has never been hoisted in the county. In Mathews County, however, there seems to be considerable difference, and I am inclined to think that the hoisting of the flag

may engender some bitterness, which, if it had been delayed a little while, would have been avoided.

I shall keep up a constant communication with the citizens and endeavor to make myself acquainted with the popular feeling in both counties.

I would respectfully ask if my course as above described meets your approbation, and I would also ask some advice upon such points as may occur to you, for I am fully aware that brains are now of more consequence than guns.

I would also be pleased to have some instructions about the blockading after the Army arrives, as they will probably give free permits to bring in goods, etc., without any reference to the naval forces here.

Very respectfully, your obedient servant,

EDW. HOOKER,
Actg. Vol. Lieut. Comdr., U. S. N., Comdg. 1st Div. Potomac Flotilla.

Commander F. A. PARKER, U. S. Navy,
Commanding Potomac Flotilla.

Report of Acting Volunteer Lieutenant-Commander Hooker, U. S. Navy, commanding First Division Potomac Flotilla, regarding disposition of vessels of his command.

U. S. S. COMMODORE READ,
Rappahannock River, April 27, 1865.

SIR: The available force of the First Division is now the *Morse*, at Wicomico; *Putnam*, Fleet's Bay and creeks; *Commodore Read*, Rappahannock, and *Freeborn*, Piankatank. I have sent the *Freeborn* to the light-ship, but Captain Arthur says that he can not remain there, and is oftener in Mobjack Bay, or some such place, than on the station. The *Freeborn* would be a much better vessel for Cherrystone than the *Periwinkle*, while that vessel is well suited to cruise around the lower part of my station and the Wolf Trap, as she can keep the station in all weathers. With the present disposition of the vessels, the whole coast from Piankatank to Mobjack is most of the time unguarded.

Very respectfully, your obedient servant,

E. HOOKER,
Actg. Vol Lieut. Comdr., U. S. N., Comdg. 1st Div. Potomac Flotilla.

Commander F. A. PARKER, U. S. Navy,
Commanding Potomac Flotilla.

[Telegram.]

ST. MARY'S, MD., *April 27, 1865.*
(Received at Washington 10:30 a. m.)

Many officers and men on the northern neck of Virginia and on the right bank of the Rappahannock, belonging to the rebel Army of Northern Virginia, are applying to me for paroles under Lee's surrender. What shall I do?

Respectfully,

F. A. PARKER,
Commander, Commanding, etc.

Hon. GIDEON WELLES,
Secretary Navy.

[Telegram.]

NAVY DEPARTMENT, *April 27, 1865.*

General Hancock will have orders to parole the men. You need not trouble them. They are not to cross into Maryland. Booth was killed and captured with Herold yesterday, 3 miles southwest of Port Royal, Va.

GIDEON WELLES.

Commander F. A. PARKER,
Commanding Potomac Flotilla, St. Inigoes, Md.

[Telegram.]

NAVY DEPARTMENT, *April 27, 1865.*

The special restrictions relative to retaining vessels are removed. Permit them to pass as usual.

G. WELLES,
Secretary of the Navy.

Commander F. A. PARKER,
Commanding Potomac Flotilla, St. Inigoes, Md.

Order of the Secretary of the Navy to Commander Parker, U. S. Navy, commanding Potomac Flotilla, to be prepared for surprise by the C. S. ram Stonewall.

NAVY DEPARTMENT, *April 28, 1865.*

SIR: Information has been received from the U. S. consul at Teneriffe to the effect that the rebel ram *Stonewall* left that place, where she obtained a supply of coal April 1, at 6 p. m., and steamed away rapidly to the south. Her destination is believed to be some point on our coast, and every precaution should be taken by you to guard against surprise and to prevent her inflicting serious injury should she make her appearance anywhere within the limits of your command, and the best means in your power used to capture or destroy her.

Very respectfully,

G. WELLES,
Secretary of the Navy.

Commander FOXHALL A. PARKER,
Commanding Potomac Flotilla, Navy Yard, Washington, D. C.

Order of Commander Parker, U. S. Navy, commanding Potomac Flotilla, to Acting Volunteer Lieutenant-Commander Hooker, U. S. Navy, commanding First Division, in view of rumored approach of C. S. ram Stonewall.

U. S. S. DON,
Potomac Flotilla, April 30, 1865.

SIR: You will bear in mind that in case the rebel ram *Stonewall* should succeed in entering the Chesapeake, the duty will devolve upon the Potomac Flotilla of covering the approaches to Washington and Baltimore, which can only be done at Point Lookout.

You will therefore detail your fastest steamer for the purpose of watching her movements should she appear within the limits of your command, and with the rest of your vessels fall back with all speed to Point Lookout, being careful to make the signal of danger as soon as you get within signal distance of the point.

The *Stonewall* is said to be brig-rigged. Let the vessel off the Wolf Trap keep a good lookout for her.

Respectfully, yours,

FOXHALL A. PARKER,
Commander, Commanding Potomac Flotilla.

Acting Volunteer Lieutenant-Commander E. HOOKER,
Commanding U. S. S. Commodore Read.

Instructions of Commander Parker, U. S. Navy, commanding Potomac Flotilla, to Acting Volunteer Lieutenant-Commander Hooker, U. S. Navy, commanding First Division, regarding continuance of blockade.

U. S. S. DON,
Potomac Flotilla, April 30, 1865.

SIR: In reply to your communications of the 27th instant, I have to inform you that the blockade continues in full force until raised by order of the Navy Department.

I have been informed by the honorable the Secretary of the Navy that the military authorities will attend to paroling rebel officers and men and to administering the oath of allegiance, etc.

You will be particularly careful not to allow persons to land or leave Virginia.

Regulations made by the War Department or by any commanding general will not be regarded by you, unless such regulations are sanctioned by the Navy Department.

It will be best to leave the land entirely to the military, and keep the control of the water in our own hands.

Send *Freeborn* to relieve *Periwinkle* at Cherrystone, and tell Captain Arthur to keep a good lookout for the ram, telegraphing at once to all points and then running to you if he should see her.

All vessels will have to come to St. Inigoes for coal, as I have no coal schooner to send now.

Respectfully, yours,

FOXHALL A. PARKER,
Commander, Commanding Potomac Flotilla.

Acting Volunteer Lieutenant-Commander E. HOOKER,
Commanding U. S. S. Commodore Read.

[Endorsement on envelope.]

If an army force should take possession of any point on the Rappahannock, vessels will be allowed to pass to the army force upon a certificate of a quartermaster that they have nothing aboard but stores for the Army.

F. A. PARKER.

Report of Commander Parker, U. S. Navy, commanding Potomac Flotilla, of receipt of orders.

U. S. S. DON,
Potomac Flotilla, May 1, 1865.

SIR: I have the honor to acknowledge the receipt of your communication of the 28th ultimo in relation to the rebel ram *Stonewall*, and in obedience to the order contained therein have taken every precaution to "guard against surprise," etc.

I am, sir, very respectfully, your obedient servant,

FOXHALL A. PARKER,
Commander, Commanding Potomac Flotilla.

Hon. GIDEON WELLES,
Secretary of the Navy.

[Telegram.]

NAVY DEPARTMENT, *May 1, 1865.*

Let the *Sassacus* report to Acting Rear-Admiral Radford at Hampton Roads.

G. WELLES,
Secretary of the Navy.

Commander F. A. PARKER,
Commanding Potomac Flotilla, Point Lookout, Md.

Instructions of Acting Volunteer Lieutenant-Commander Hooker, U. S. Navy, commanding First Division Potomac Flotilla, to the commanding officer of the U. S. S. Thomas Freeborn, regarding the C. S. ram Stonewall.

U. S. S. COMMODORE READ,
Rappahannock River, Virginia, May 1, 1865.

SIR: You will proceed to Cherrystone and relieve U. S. S. *Periwinkle* on that station. You will be very careful and keep a good lookout for rebel vessels reported to be bound to the Chesapeake Bay, and especially for the rebel ram *Stonewall*. Should you discover the *Stonewall* or other rebel vessels, you will at once telegraph to Commander Parker at St. Inigoes or Point Lookout and such other points as may be deemed proper, and having done so will fall back and report to me for further orders; if during the night, making the established signals, and at all times signalizing the enemy in sight.

You will find me at this place or Point Lookout. The *Stonewall* is said to be brig-rigged.

Very respectfully, your obedient servant,

E. HOOKER,
Actg. Vol. Lieut. Comdr., U. S. N., Comdg. 1st Div. Potomac Flotilla.

COMMANDING OFFICER U. S. S. FREEBORN.

P. S.—Be particular and not permit any persons to pass you to or from the Virginia shore.

Order of Commander Parker, U. S. Navy, commanding Potomac Flotilla, to Acting Volunteer Lieutenant-Commander Hooker, U. S. Navy, commanding First Division, to proceed to Point Lookout, Md.

U. S. S. DON,
Potomac Flotilla, May 1, 1865.

SIR: Upon the arrival of Acting Volunteer Lieutenant W. F. Shankland with the U. S. S. *Banshee*, you will turn over to him the command of the Rappahannock River and your department, posting him well up in reference to his duties, and then you will proceed with the *Read* with all dispatch to Point Lookout, where you will await further orders from me.

Respectfully,

F. A. PARKER,
Commander, Commanding Potomac Flotilla.

Acting Volunteer Lieutenant-Commander E. HOOKER,
Commanding U. S. S. Commodore Read.

Order of Acting Volunteer Lieutenant-Commander Hooker, U. S. Navy, commanding First Division Potomac Flotilla, to the commanding officer of the U. S. S. Little Ada, regarding picket duty.

U. S. S. COMMODORE READ,
Off Point Lookout, Md., May 3, 1865.

SIR: You will proceed to the picket line between Smith's Point and the eastern shore and relieve U. S. S. *Delaware* on that line, remaining on that picket until relieved.

You will communicate with and satisfy yourself in regard to the character of all vessels passing on that line.

You will communicate with the vessel you relieve and obtain from the commanding officer such information as you may need as to the manner in which he has been performing these duties under the order of Commander Parker.

You will show these orders to the officer that you relieve and instruct him by my order to report to me at Point Lookout.

Very respectfully, your obedient servant,

E. HOOKER,
Actg. Vol. Lieut. Comdr., U. S. N., Comdg. 1st Div. Potomac Flotilla.

COMMANDING OFFICER U. S. S. LITTLE ADA.

Order of Acting Volunteer Lieutenant-Commander Hooker, U. S. Navy, commanding First Division Potomac Flotilla, to the commanding officer of the U. S. S. Nansemond, regarding picket duty.

U. S. S. COMMODORE READ,
Off Point Lookout, Md., May 3, 1865.

SIR: You will proceed to the picket line between Smith's Point and the eastern shore and relieve U. S. S. *Adela* on that line, remaining as picket until relieved.

You will communicate with and satisfy yourself in regard to the character of all vessels passing on that line. You will communicate with the vessel you relieve and obtain from the commanding officer such information as you may need as to the manner in which he has been performing these duties under the order of Commander Parker.

You will show these orders to the officer that you relieve, and instruct him by my order to report to me at Point Lookout.

Very respectfully, your obedient servant,

E. HOOKER,
Actg. Vol. Lieut. Comdr., U. S. N., Comdg. 1st Div. Potomac Flotilla.

COMMANDING OFFICER U. S. S. NANSEMOND.

Order of the Secretary of the Navy to Commander Parker, U. S. Navy, commanding Potomac Flotilla, for the reduction of the force under his command.

NAVY DEPARTMENT, *May 3, 1865.*

SIR: Circumstances will admit now of the reduction of your flotilla to one-half of its present number of vessels. You will accordingly select such as may promise to be most useful for service within the limits of your command and send the residue to Washington. Commodore Montgomery has been instructed to put repairs on those only that you may retain. Advise him of your selection and send a list of them to the Department. It is important to exercise economy in every branch of the flotilla, especially in the use of the fuel. The vessels should be under steam only when necessary.

Very respectfully, etc.,

G. WELLES,
Secretary of the Navy.

Commander F. A. PARKER,
Commanding Potomac Flotilla, Washington.

Report of Commander Parker, U. S. Navy, Commanding Potomac Flotilla, designating vessels to be relieved from duty in the Potomac.

U. S. S. DON,
Potomac Flotilla, May 5, 1865.

SIR: In obedience to your order of the 3d instant, I shall send immediately to the U. S. navy yard, Washington, the following vessels, viz: *Anacostia, Cœur de Lion, Casco,* and *Chimo,* ironclads; *Crusader, Cactus, Commodore Barney, Dragon, Freeborn, General Putnam, Jacob Bell, I. N. Seymour, Mystic, Morse, Mercury, Teaser, Resolute, Western World, Yankee, Zeta, Juniper, Adolph Hugel,* and *William Bacon* schooners.

And will retain the following, viz: *Adela, Banshee, Currituck, Commodore Read, Don, Delaware, Ella, Fuchsia, Heliotrope, Little Ada, Moccasin, Nansemond, Primrose, Periwinkle,* picket launch *No. 4,* picket launch *No. 6, Rescue, Stepping Stones, Verbena, Wyandank,* storeship.

I have the honor to be, very respectfully, your obedient servant,

FOXHALL A. PARKER,
Commander, Commanding Potomac Flotilla

Hon. GIDEON WELLES,
Secretary of the Navy, Washington, D. C.

[Endorsement.]

Commander Parker has been notified verbally not to send them up until after we hear of the *Stonewall.*

As fast as they come up, dismantle and sell.

[G. V. FOX,
Assistant Secretary of the Navy.]

Order of the Secretary of the Navy to Commander Parker, U. S. Navy, commanding Potomac Flotilla, regarding limits of command.

NAVY DEPARTMENT, *May 11, 1865.*

SIR: You will withdraw any vessels that you may have on service north of Baltimore, and the northern limits of your command will not extend beyond nor include the Patapsco River.

Very respectfully, etc.,

G. WELLES,
Secretary of the Navy.

Commander FOXHALL A. PARKER,
Commanding Potomac Flotilla, Washington.

[Telegram.]

NAVY DEPARTMENT, *May 12, 1865.*

Give orders to pass all vessels provided with regular custom-house clearances. General Orders, No. 53, sent to you at Washington, will advise you fully on this subject.

G. WELLES,
Secretary of the Navy.

Commander F. A. PARKER,
Commanding Potomac Flotilla, St. Inigoes, Md.

General Orders of the Secretary of the Navy regarding the movement of vessels, transmitting Executive order relative to the raising of the blockade of Southern States.

GENERAL ORDERS, No. 53. } NAVY DEPARTMENT, *May 10, 1865.*

The annexed Executive order is published for the information of officers of the Navy. The entrance of vessels into ports within the designated territory will not be interrupted or interfered with when the same are provided with a regular United States custom-house clearance, and there is no reasonable ground for suspicion that they have contraband of war on board.

GIDEON WELLES,
Secretary of the Navy.

[Enclosure.]

Executive order.

EXECUTIVE CHAMBER,
Washington, April 29, 1865.

Being desirous to relieve all loyal citizens and well-disposed persons residing in insurrectionary States from unnecessary commercial restrictions, and to encourage them to return to peaceful pursuits, it is hereby ordered:

I. That all restrictions upon internal, domestic, and coastwise commercial intercourse be discontinued in such parts of the States of

Tennessee, Virginia, North Carolina, South Carolina, Georgia, Florida, Alabama, Mississippi, and so much of Louisiana as lies east of the Mississippi River as shall be embraced within the lines of national military occupation, excepting only such restrictions as are imposed by acts of Congress and regulations in pursuance thereof prescribed by the Secretary of the Treasury and approved by the President, and excepting also from the effect of this order the following articles contraband of war, to wit: Arms, ammunition, all articles from which ammunition is manufactured, gray uniforms and cloth, locomotives, cars, railroad iron, and machinery for operating railroads, telegraph wires, insulators, and instruments for operating telegraphic lines.

II. All existing military and naval orders in any manner restricting internal, domestic, and coastwise commercial intercourse and trade with or in the localities above named be, and the same are hereby, revoked; and that no military or naval officer, in any manner, interrupt or interfere with the same, or with any boats or other vessels engaged therein, under proper authority, pursuant to the regulations of the Secretary of the Treasury.

ANDREW JOHNSON.

Report of Acting Volunteer Lieutenant-Commander Hooker, U. S. Navy, commanding First Division Potomac Flotilla, of assistance rendered to the ship Old Dominion, of Richmond, and schooner James McGee.

U. S. S. COMMODORE READ,
Rappahannock River, Virginia, May 13, 1865.

SIR: I have to report that on the 12th instant, after leaving Point Lookout for this river, off Smith's Point I fell in with a large ship with her ensign set union down. On communicating with her I found her to be the *Old Dominion*, of Richmond, from Baltimore, outward bound, and that a part of her crew had taken the boat and deserted. The captain asked for men, but finding that she had some passengers on board who, with the remainder of the crew, numbered ten or twelve men, I declined to furnish him men, but advised him to make sail and go to Hampton Roads, to which place he had a fair wind. This he did.

I soon after discovered a schooner in distress, which proved to be the *James McGee*, of Philadelphia, loaded with ordnance stores, leaking very badly, and the crew worn out with pumping. I put Mate A. Kirk and six men on board of her to assist in pumping, and on my arrival at this place sent the *Banshee* to her assistance. The schooner arrived at Point Lookout on Saturday, the 13th instant. My officer and men have been returned to me. The schooner was one of a tow of two schooners and a barge. The tug which had them was at Point Lookout all safe, and stated that after the schooners broke adrift he held on to the barge until she sank off Smith's Point. The other schooner had not been heard from.

Very respectfully, your obedient servant,

E. HOOKER,
Actg. Vol. Lieut. Comdr., U. S. N., Comdg. 1st Div. Potomac Flotilla.

Commander PARKER, U. S. Navy,
Commanding Potomac Flotilla.

[Telegram.]

WASHINGTON, *May 13, 1865.*

Pass all vessels provided with regular custom-house clearances and send this telegram without delay to Acting Volunteer Lieutenant Hooker, off the Rappahannock, for his guidance. Answer.

F. A. PARKER,
Commanding Potomac Flotilla.

SENIOR OFFICER.

Report of Acting Volunteer Lieutenant-Commander Hooker, U. S. Navy, commanding First Division Potomac Flotilla, requesting instructions about vessels leaving the Rappahannock River.

U. S. S. COMMODORE READ,
Rappahannock River, Virginia, May 14, 1865.

SIR: Your telegram respecting passing vessels is received.

I would respectfully ask instructions about vessels leaving these waters. They are all cleared to come out here, but nothing is said about returning. If in ballast this would not amount to much, but the most of them expect to get cargoes of some kind back again—cotton, tobacco, corn, meats, oysters, etc.—and there are no custom-houses or officers in this region to clear them.

Many persons, too, wish to go North in the vessels on business, etc., but none of the people in this region have taken the oath of allegiance yet, nor are there provost guards about here that I can hear of.

Will you oblige me with instructions on these points at as early a date as possible?

Very respectfully, your obedient servant,

E. HOOKER,
Actg. Vol. Lieut. Comdr., U. S. N., Comdg. 1st Div. Potomac Flotilla.

Commander F. A. PARKER, U. S. Navy,
Commanding Potomac Flotilla.

Report of Commander Parker, U. S. Navy, commanding Potomac Flotilla, regarding withdrawal of vessels.

U. S. S. DON.
Potomac Flotilla, May 15, 1865.

SIR: I have the honor to acknowledge the receipt of your communication of the 11th instant, and in accordance therewith have withdrawn all the vessels of this flotilla which were stationed north of the Patapsco River.

Very respectfully, your obedient servant,

FOXHALL A. PARKER,
Commander, Commanding Potomac Flotilla.

Hon. GIDEON WELLES,
Secretary of the Navy.

Order of Commander Parker, U. S. Navy, commanding Potomac Flotilla, to Acting Volunteer Lieutenant-Commander Hooker, U. S. Navy, commanding First Division, restricting movements of vessels to and from foreign ports.

U. S. S. DON,
Potomac Flotilla, May 17, 1865.

SIR: Vessels can pass out with produce upon a pass from the military commandant at the place they clear from if there be no custom-house there, provided they are bound to some port in Maryland having a custom-house. You will then give them a pass, stating that they are subject to such taxes as the Government may impose.

If bound to any port in the United States outside of the capes, they must proceed to Norfolk, and clear at the custom-house there.

No vessel can enter Virginia from a foreign port or clear for a foreign port from Virginia.

Let your passes state fully what conditions vessels are subject to in accordance with the above.

Passengers can not be allowed to enter or leave Virginia without having taken the oath of allegiance and having in their possession a pass from the general commanding or provost-marshal of department they come from.

I am, respectfully, yours,

FOXHALL A. PARKER,
Commander, Commanding Potomac Flotilla.

Acting Volunteer Lieutenant-Commander E. HOOKER,
Commanding U. S. S. Commodore Read.

[Telegram.]

NAVY DEPARTMENT, *May 18, 1865.*

Let the *Mahopac* drop down to Fort Foote, [Md.], and anchor all ready for action; also for going to sea, if necessary.

G. WELLES,
Secretary of the Navy.

Commodore J. B. MONTGOMERY,
Commandant Navy Yard, Washington.

Order of commandant Navy Yard, Washington, to Lieutenant Day, U. S Navy, commanding U. S. S. Saugus.

COMMANDANT'S OFFICE, NAVY YARD,
Washington, May 20, 1865.

SIR: Drop down to Fort Foote with the *Saugus*, under your command, and anchor, all ready for action; also for going to sea, if necessary.

Respectfully, your obedient servant,

J. B. MONTGOMERY,
Commandant.

Lieutenant B. F. DAY,
Commanding U. S. S. Saugus.

Report of Acting Volunteer Lieutenant-Commander Hooker, U. S. Navy, commanding First Division Potomac Flotilla, regarding passes for vessels.

U. S. S. COMMODORE READ,
Rappahannock River, Virginia, May 21, 1865.

SIR: Your instructions of May 17 are received. I have not yet had occasion to pass any vessels out except one or two with small lots of oysters, to which I gave passes, as I did last spring. There are, however, two or three vessels loading wood, staves, etc., which will probably be along in a few days. I believe also that there are some vessels loading small lots of tobacco, etc.

I enclose a copy of a form of pass which I propose (with your approbation) to give them. There are no military commanders that I know of about here except at Yorktown, Richmond, and Fredericksburg, so that probably none of the vessels will have military permission to leave.

So, too, about passengers. If they have any, they will not have taken the oath of allegiance, as there is no one about here to administer it.

If I should be permitted to pass vessels to a port of entry and administer the oath to persons who have not taken it and forward them to some provost-marshal until the arrival of the military authorities (on whom of course the business of oaths, etc., would then devolve) it would, I think, save much trouble and expense to the vessels.

Very respectfully, your obedient servant,

EDW. HOOKER,
Actg. Vol. Lieut. Comdr., U. S. N., Comdg. 1st Div. Potomac Flotilla.

Commander F. A. PARKER, U. S. Navy,
Commanding Potomac Flotilla.

[Telegram.]

NAVY DEPARTMENT, *May 26, 1865.*

Send the *Saugus* and the two torpedo boats to the Washington navy yard.

G. V. FOX,
Acting Secretary of the Navy.

Commander F. A. PARKER,
Commanding Potomac Flotilla, St. Inigoes, Md.

[Telegram.]

WASHINGTON NAVY YARD, *May 27, 1865.*
(Received at Washington 11:45 a. m.)

Telegram received. Will send *Saugus* and torpedo boats to this navy yard without delay.

Respectfully,

F. A. PARKER,
Commander.

G. V. FOX,
Assistant Secretary Navy.

[Telegram.]

NAVY DEPARTMENT, *May 27, 1865.*

Withdraw guard boats at Point Lookout and Alexandria and send them to Washington.

G. V. FOX,
Acting Secretary Navy.

Commander F. A. PARKER,
Commanding Potomac Flotilla, St. Inigoes, Md.

Order of Commander Parker, U. S. Navy, commanding Potomac Flotilla, to commanding officer U. S. S. Commodore Read, regarding that vessel.

U. S. S. DON,
Potomac Flotilla, May 27, 1865.

SIR: Agreeably to an order of the Navy Department, you will repair forthwith with your vessel to the navy yard, Washington, and report to Commodore J. B. Montgomery, commandant U. S. navy yard, Washington, to be put out of commission.

You will return your flotilla steam-signal book to me upon your arrival at Washington.

Respectfully, yours,

FOXHALL A. PARKER,
Commander, Commanding Potomac Flotilla.

COMMANDING OFFICER U. S. S. COMMODORE READ.

Order of the Assistant Secretary of the Navy to Commander Parker, U. S. Navy, commanding Potomac Flotilla, for the further reduction of the force under his command.

NAVY DEPARTMENT, *May 31, 1865.*

SIR: Reduce the Potomac Flotilla to eight vessels, not including the dispatch boat *Ella* and a storeship, and send a list of the eight to the Department. Turn over, after consultation with Commodore Montgomery, two of the best tugboats for service at the yard. The surplus vessels of the flotilla will be sent to the yard to be disposed of as the Department may direct.

Very respectfully, etc.,

G. V. FOX,
Acting Secretary Navy.

Commander F. A. PARKER,
Commanding Potomac Flotilla, Washington.

Report of Commander Parker, U .S. Navy, commanding Potomac Flotilla, designating the vessels retained for duty in the Potomac River.

U. S. S. DON,
Potomac Flotilla, May 31, 1865.

SIR: I have the honor to inform the Department that the vessels which I shall retain are the *Don, Nansemond, Delaware, Currituck,*

Fuchsia, *Adela*, *Moccasin*, *Periwinkle*, storeship *Wyandank*, dispatch boat *Ella*.

The vessels already sent to the yard are the *Anacostia*, *Cœur de Lion*, *Chimo* and *Casco* (ironclads), *Crusader*, *Cactus*, *Commodore Barney*, *Dragon*, *General Putnam*, *Jacob Bell*, *I. N. Seymour*, *Mystic*, *Morse*, *Resolute*, *Teaser*, *Western World*, *Yankee*, *Zeta*, *Juniper*, *Adolph Hugel* (schooner), *Watch*, *Banshee*, *Commodore Read*, *Freeborn*, *Primrose*, *Rescue*.

To which will be added in a few days the *Mercury*, *William Bacon*, *Heliotrope*, *Verbena*, *Stepping Stones*, *Little Ada*.

Commodore Montgomery agrees with me that the *Primrose* and *Rescue* (propeller tugs) will be the best vessels to retain for service at the navy yard.

I am, sir, very respectfully, your obedient servant,

FOXHALL A. PARKER,
Commander, Commanding Potomac Flotilla.

Hon. G. V. FOX,
Assistant Secretary of Navy, Washington, D. C.

[Endorsement.]

Notify commandant that the *Rescue* and *Primrose* will be attached to the yard, one only at a time to be kept running, to be fitted in the plainest and cheapest manner. Such persons as are necessary to run the vessel to be borne on the books of the yard as part of the yard force; none of them will be officers of the Navy. Enquire, and report to the Department the number of persons and the wages which will be required to run the vessel.

Land stores, etc., from all other vessels and sell them.

[G. V. FOX.]

Letter from Commander Parker, U. S. Navy, commanding Potomac Flotilla, to the Secretary of the Navy, commending Acting Volunteer Lieutenant-Commander Hooker, U. S. Navy, for fidelity in service.

U. S. S. DON,
Potomac Flotilla, June 7, 1865.

SIR: Acting Volunteer Lieutenant-Commander Hooker having been detached from this flotilla, it gives me pleasure to state to the Department that during the seventeen months he has served under my command he has performed his duty as a divisional commander off the Rappahannock with zeal and fidelity.

I part with Acting Volunteer Lieutenant-Commander Hooker with regret, and respectfully beg to recommend him to the Department as an officer of merit.

I am, sir, very respectfully, your obedient servant,

FOXHALL A. PARKER,
Commander, Commanding Potomac Flotilla.

Hon. GIDEON WELLES,
Secretary of the Navy.

Order of Commander Parker, U. S. Navy, to Acting Master Street, U. S. Navy, commanding U. S. S. Fuchsia.

U. S. S. DON,
Washington Navy Yard, June 12, 1865.

SIR: You will proceed without delay to St. Inigoes Creek, Maryland, and report to Lieutenant-Commander J. C. Chaplin for duty.

Very respectfully, etc.,

FOXHALL A. PARKER,
Commander, Commanding Potomac Flotilla.

Acting Master W. T. STREET,
Commanding U. S. S. Fuchsia.

Report of Acting Volunteer Lieutenant Eldridge, U. S. Navy, commanding U. S. S. Delaware, of expedition to Potomac Creek in search of buried torpedoes.

U. S. S. DELAWARE,
Potomac Flotilla, July 13, 1865.

SIR: In obedience to your order, I proceeded to Potomac Creek in search of two torpedoes reported to have been buried near a house situated about a mile distant from the river.

After some difficulty I learned where they were concealed and dug them out without accident.

The following is a description of the torpedoes and appurtenances:

The body of the torpedo is made of sheet copper, with a concave head, and pointed at the lower end somewhat in the shape of a nun buoy, about 2 feet 6 inches in length, and sufficiently large to hold 80 pounds of powder. In the head are fixed five tubes, with percussion primers. At the lower end is a socket, by means of which the torpedo is attached to its anchor. The anchor is of the kind usually known as mushroom anchor, globular at the top and flat underneath. It has a hole in its center about 5 inches in diameter, across which is fixed an iron bar having an eyebolt in its center, by which means the torpedo is attached.

The fuse consists of a paper case filled with percussion and powder inserted in a metal tube, and covered by a percussion wafer which projects through the upper end of the tube and covers its head.

This tube is secured in another larger tube (similar to the metal stock used for our navy fuse) by a small screw through the latter, and working in a groove made for the purpose in the former. The percussion wafer and fuse attached are protected from the water by a copper cap, that covers the entire head of the larger tube, of the thickness ordinarily used for percussion caps.

For safety in transporting, a safety cap of composition metal, of sufficient thickness to resist a moderate blow, is placed over the head of the fuse and secured on one side by a small thumbscrew.

I have the honor to be, sir, very respectfully, your obedient servant,

J. H. ELDRIDGE,
Acting Volunteer Lieutenant, Commanding.

Commander F. A. PARKER, U. S. Navy,
Commanding Potomac Flotilla.

[Endorsement.]

U. S. S. DON, *July 14, 1865.*

Respectfully forwarded to the Navy Department, with the remark that the torpedoes have been sent to the ordnance yard at Washington.

The information which led to the discovery of these torpedoes is contained in two communications, enclosed herewith, and marked A and B, recently received from Beverly Kennon, formerly a lieutenant in our Navy.

F. A. PARKER,
Commander, Commanding Potomac Flotilla.

BUREAU OF ORDNANCE, *July 19, 1865.*

Received and contents noted.

[Enclosure A.]

Two torpedoes, holding 80 pounds, sensitive tubes, torpedoes capped, safety tubes on the caps, buried on the roadside; the torpedoes are buried in her yard near her stable. A wicker fence is near at hand (say, 5 yards). Her house is situated on the roadside, about 1 mile from the mouth of Potomac Creek. Unless these torpedoes are removed some innocent body may suffer.

BEVERLY KENNON,
Commander, C. S. Navy.

[Enclosure B.]

On the property is a woman, with five children; her oldest son is a boy, say, 15 years old, who will show you where these things are. They are buried on the roadside, say, 1 mile or less from eastern mouth of Potomac Creek. When you call there, the older boy will plead ignorance. Tell him that I say he must show you, and he will do so.

BEVERLY KENNON,
Late Lieutenant [C. S. Navy].

Order of the Secretary of the Navy to Commander Parker, U. S. Navy, commanding Potomac Flotilla, regarding wharf at St. Inigoes, and the disbanding of the Potomac Flotilla on July 31, 1865.

NAVY DEPARTMENT, *July 18, 1865.*

SIR: Sell the wharf at St. Inigoes for as much as you can, but not less than 33 per cent below its cost. If you can not so dispose of it, remove it to the Washington navy yard.

Send a couple of vessels, with necessary men and officers, to Baltimore, to bring the *Keystone State* and *John L. Lockwood* to Washington.

On the 31st of this month lay up the Potomac Flotilla, with the exception of the *Don*, sending the vessels to the Washington navy yard.

Very respectfully, etc.,

G. WELLES,
Secretary of the Navy.

Commander F. A. PARKER,
Commanding Potomac Flotilla, Washington.

Report of Commander Parker, U. S. Navy, commanding Potomac Flotilla, regarding the disposition of boats seized in Patuxent River.

U. S. S. DON,
Potomac Flotilla, July 31, 1865.

SIR: In reply to your communication of the 28th instant, I have the honor to make to the Department the following statement:

After the assassination of the late lamented President, a number of boats were seized in the Patuxent River, some of which were destroyed and others carried to naval depot at St. Inigoes. For each of these some six claimants appeared, all swearing to their property, but not one willing to take an oath that he had been loyal during the rebellion. Among the number came Mr. Ezekiel Daniels, representing himself as an agent for colored people, who he said had lost their boats. He was told that if colored men came and identified their property, it would be returned to them. No colored men appeared, but Mr. Daniels brought with him to the depot a number of white men not willing to take the prescribed oath, one of whose number claimed as his a boat seized very many months ago in the Potomac River in the act of running the blockade. Under these circumstances I directed that the boats should be distributed among officers, seamen, and pilots who had served faithfully during the rebellion, and to some contrabands who had acted as guides. These were of course given, not sold, and as I did not reserve a single one of them for myself, Mr. Daniels was misinformed in relation to the boat which he saw at the Washington navy yard.

I am, sir, very respectfully, your obedient servant,

FOXHALL A. PARKER,
Commander, Commanding Potomac Flotilla.

Hon. GIDEON WELLES,
Secretary of the Navy.

Report of Commander Parker, U. S. Navy, commanding Potomac Flotilla, regarding the disposition of vessels of the flotilla.

U. S. S. DON,
Potomac Flotilla, July 31, 1865.

SIR: In reply to your communications of the 18th and 19th instant, I have the honor to inform the Department that the *Wyandank* was yesterday sent to Norfolk in tow of the *Moccasin*, carrying with her the patients sent from the naval hospital at Washington. The *Moccasin* is directed to return from Norfolk to Washington to be put out of commission. The other vessels of the flotilla, with the exception of the *Don*, have this day been laid up, as directed, at the Washington yard. The *Keystone State* and *J. L. Lockwood* were towed to Washington on the 27th instant. On the 28th instant I sold the naval property at St. Inigoes to Dr. C. M. Jones for $400, which was the best sale I could make of it. The money was paid to Paymaster J. N. Carpenter.

I am, sir, very respectfully, your obedient servant,

FOXHALL A. PARKER,
Commander, Commanding Potomac Flotilla.

Hon. GIDEON WELLES,
Secretary of the Navy.

Abstracts of log books of United States vessels which served in the Potomac and Rappahannock rivers during the period from December 7, 1861, to July 31, 1865.*

Abstract log of the U. S. S. Anacostia, September 29, 1862, to April 6, 1863.

September 29, 1862.—Lying at the navy yard, Washington, D. C.

December 4.—At 4 p. m. the enemy opened fire, and we immediately weighed anchor and responded to their fire and continued firing until dark. Vessel was not struck, all the shot passing over with one exception, which fell alongside. In coming down the river (Rappahannock) was opened on by the enemy from Pratt's Bluff, but passed uninjured. At 5:30 anchored about 3 miles below Port Royal, Va.

December 10.—At 3 p. m. enemy opened fire on U. S. S. *Currituck*, coming up the river. At 3:15 the enemy opened fire upon the fleet. Responded immediately with 9-inch shell gun and 50-pound rifle. At 4:45 ceased firing, not having been struck.

December 11.—At 6:30 a. m. went a short distance down the river and opened fire on the rebels, the enemy not returning our fire. From 8 a. m. to 12 all hands at quarters during the watch, firing occasionally on the enemy, they not returning our fire.

January 2, 1863.—At 3 p. m. fired several shell at a schooner which the rebels had set on fire.

February 11.—At 9:30 a. m. saw a canoe; chased her. Fired 50-pound rifle three times. Chased her into Carter's Creek, where we came to anchor. At 11 second cutter started in pursuit. Failing to catch her, at 2 p. m. returned.

February 25.—At 9:30 a. m. got underway and steamed up Rappahannock River; fired three rounds with 8-inch shell gun and 50-pound rifle at Grey's Point.

Abstract log of the U. S. S. Cœur de Lion, December 15, 1861, to June 2, 1865.

December 15, 1861.—At 12 m. U. S. S. *Anacostia* proceeded down [Potomac River] under Cockpit Point and opened fire upon a battery just opened, the battery returning the fire, but doing no damage. At 1 p. m. steamer *Anacostia* steamed down abreast of battery. At 2:15 opened fire on battery again at intervals of thirty minutes; after firing 4 shots the battery returned it, the *Anacostia* firing 7 shots, the battery 5. Flagship signaled to cease firing.

December 16.—At 12:15 a. m. the batteries from Shipping Point opened fire upon us. One shell passed directly over us, bursting 10 yards on starboard beam. Two shots burst 20 feet on starboard quarter; six others fell short and in our wake. Fired two shots from quarter gun.

December 17.—At 10:30 a. m. heavy firing above. 11 a. m. firing from Shipping Point battery. At 10:15 p. m. one shot fired from Shipping Point battery.

December 18.—At 6 p. m. firing from Shipping Point battery at passing vessels. At 8 p. m. two shots fired at Shipping Point.

December 19.—At 11:30 p. m. firing from Shipping Point battery.

December 20.—At 12:30 p. m. heavy firing at Shipping Point battery on passing vessels. At 2, one schooner came down; several shots fired at her; no damage.

---

*Where vessels are mentioned in the preceding text and no abstract log appears in this volume, it is either because the log books have not been found, or the incidents mentioned in them are not of sufficient importance to justify their publication.—COMPILERS.

January 8, 1862.—Got underway and steamed down to the mouth of Machodoc Creek, and threw several shells on shore.

December 4.—At 7 a. m. discovered a number of soldiers in a rifle pit opposite where we were anchored. All hands were called to quarters, and we fired three guns at them, and then steamed down the river. At 4:15 p. m. were fired at by a battery a little below the town [of Port Royal, Va.]. Stood toward the battery, all the time answering the fire. The fleet all answered for about an hour, and then steamed down the river and anchored about 5 miles below. We received no damage, not being struck by anything heavier than musket balls.

December 10.—At 3 p. m. the rebels open a battery on the fleet. The fire is returned.

December 11.—At 7:30 a. m. the fleet open fire on the enemy.

December 21.—Saw a large flatboat crossing the [Rappahannock] River; fired a shot across her bows and brought her alongside. Saw another flatboat on the shore. Sent boats and brought her off, she having a wagon loaded with oysters, poultry, salt, and dried apples. Captured goods were all appropriated for ship's use and boats and wagons destroyed.

May 9, 1863.—At navy yard, Washington.

May 22.—Repairs completed. At 4 p. m. proceeded down the Potomac.

May 23.—At 9:40 a. m. made out a schooner on fire. Proved to be the *Caroline Anderson*, Captain Doughty, bound to Alexandria, loaded with hay and oats. We went alongside and endeavored to save her, but could not. Took a great deal of her stores, also the captain and crew, and hauled off; fired 16 shell to scuttle her.

May 27.—At 10 a. m. proceeded up the Yeocomico River in search of some schooners reported as being there. At 12:05 p. m. came to anchor at the mouth of the Yeocomico River; the captain went on shore to obtain information. At 12:45 the captain returned. At 1 the steamer *Eureka* took in tow our gig and cutter, accompanied by Captain Morris, and proceeded up the river. At 7 p. m. they returned, after burning the schooners *Charity*, *Gazelle*, and *Flight*. Got underway and proceeded to Piney Point.

May 28.—At 12:30 p. m. our boats went ashore for grain, and took off about 100 bushels. At 3:30 all hands returned on board, also Mr. Snyder (a Union man). At 5 sent two boats ashore on the Virginia shore. At 8 the boats returned with 30 bags of corn.

June 10.—At 7:30 p. m. got underway and proceeded to Coan River in search of a sloop supposed to have run the blockade. At 9:20 came to anchor in the mouth of Coan River.

June 11.—At 4 a. m. sent two boats armed and manned up the river in search of the vessel supposed to be in it. At 8:15 cutter returned. At 10 gig returned after firing two schooners named *Sarah Margaret* and *Odd Fellow*, both of Yeocomico River.

June 28.—At 11 a. m. made a small sail coming out of Coan River; gave chase, overhauled, and the captain took her in tow and proceeded to Coan River. At 1:30 p. m. anchored at Point Lookout. At 7 p. m. got underway and chased a canoe that came out of Smith's Creek [Maryland]; proved to belong to the hospital at Point Lookout.

August 22.—At 6 a. m. a boat was discovered pulling toward the Virginia shore; fired a shell from 12-pounder rifle, and brought her to and captured two men of Washington attempting to run the blockade to Richmond.

October 10.—At 6:15 p. m. off Pope's Creek; turned down river; sent gig out on guard duty in charge of Acting Ensign Watson. At 10:15 gig returned, having captured a boat and two trunks off Pope's Creek.

October 13.—At 8:30 a. m. got underway and proceeded up the river; fired 3 rounds from 30-pounder and 3 rounds shrapnel shell from 12-pounder howitzer at rebel cavalry. At 10 anchored off Pope's Creek.

April 3, 1864.—Navy yard, Washington, D. C.

May 15.—Proceeded into Potomac Creek and anchored. At 6 p. m. fired 2 rounds of percussion shell at some rebel spies on the opposite side of the creek.

May 27.—At 8:30 a. m. 1 boat from our ship and 1 from the *Teaser* went on an expedition to a house occupied by some rebels on the island opposite the wharf at Aquia Creek. At 12 the steamer *Columbus* came alongside; at same time boats returned from the expedition. At 3 p. m. expended 2 percussion shell from the 30-pounder Parrott at some rebel scouts on the opposite side of the creek. From 4 to 8 p. m. expended 5 shrapnel shell from light 12-pounder howitzer, at a house containing guerrillas below Aquia Creek.

May 31.—From 4 to 6 p. m. Running down the river shelling the banks to clear them of guerrillas. Expended during the afternoon 32 shell from 30-pounder Parrott, 18 shrapnel and 2 canister from 12-pounder light howitzer, 35 shell from 12-pounder rifle, and 200 rounds of rifle ammunition. At 9 came to anchor in the Rappahannock River.

June 2.—At 6:30 p. m. arrived and anchored in St. Clement's Bay, [Maryland]. At 7:40 sent armed boat to cruise in charge of Acting Master's Mate F. Reed. At 8:40 heard firing on shore in the direction of our boat. Acting Ensign Woods took charge of an armed boat and went to the assistance of the boat in charge of Acting Master's Mate Reed, whose boat returned at 10, having been fired into from the shore. One rifle was damaged by a shot in the breech. At 10:45 the boat in charge of Acting Ensign Woods returned.

June 18.—At 10:30 p. m. spoke the *Primrose* off Aquia Creek and found the wharf on fire. At 11 anchored near the wharf and fired 2 shell from 30-pounder Parrott and 3 shell from 12-pounder rifle howitzer; landed 2 armed boats to reconnoiter.

June 21.—At 9:30 a. m. proceeded to Potomac Creek, fired 5 rounds from the 12-pounder Parrott and 4 rounds from the 12-pounder rifle at a house upon the hill supposed to contain guerrillas; returned to the Maryland shore and anchored.

June 22.—At 8:30 a. m. ran over to Aquia Creek and landed a fire party to extinguish the fire on the wharf.

October 27.—Proceeding down the Potomac River. At 8 a. m. got underway and made fast to the stern of the *Freeborn*. At 9:30 went to quarters and shelled the enemy. Expended 6 shell from 30-pounder Parrott, 6 shell and 2 canister from light 12-pounder howitzer, 7 shell from forward heavy 12-pounder howitzer. At 6:20 p. m. anchored off Tole's Point.

December 16.—Cruising up Coan and Yeocomico rivers. At 6:30 a. m. proceeded up Yeocomico River. At 7:15 anchored in Lodge Creek and sent an armed boat ashore. From 8 a. m. to 12, received on board one suit of schooner's sails from William Dawson's house, a notorious blockade runner. At 1:30 p. m. anchored in Coan River. Received reliable information that Colonel Claybrook and 800 reserves of Westmoreland lay along the river banks; at 1:45 opened fire upon them and expended 10 shell from 30-pounder Parrott, 6 shell from 12-pounder rifled howitzer, and 6 shrapnel from 12-pounder light howitzer. Carried away

breeching of 30-pounder rifle during the skirmish. At 4:35 anchored off St. Inigoes.

December 19.—At anchor off Nomini Creek. At 10:15 a. m. the expedition, consisting of the *Eureka* and armed boats of the fleet under Commander Parker, started into Nomini Creek. At 11, *Eureka* grounded and the armed boats proceeded up alone.

December 20.—At 8:30 a. m. expedition returned. Got underway and proceeded to St. Inigoes.

December 26.—At 9:20 a. m. communicated with U. S. S. *Rescue*, sent armed boats on shore to Virginia. At 9:50 boats returned; destroyed one blockade-running boat.

April 6, 1865.—At 7:50 a. m. proceeded to Indian Creek. At 10 ran ashore; the *Commodore Read* towed us off and proceeded up the creek, shelling the woods as we went along. At 2 p. m. left Indian and proceeded up Dimer's Creek. At 3 arrived at the creek in company with the *Commodore Read*, *Freeborn*, and *Heliotrope*, shelling the woods both sides as we went along. At 4:16 ceased firing. Proceeded to the Rappahannock. Expended ammunition: Twenty-one rounds 30-pounder Parrott percussion shell, 34 rounds 12-pounder rifled howitzer percussion shell, 5 rounds 12-pounder Dahlgren howitzer (light) shrapnel, 3 rounds 12-pounder Dahlgren howitzer canister, 80 primers.

April 7.—At 11:30 p. m. arrived off Smith's Point, called all hands to quarters, and shelled the woods, having information that 50 rebels were there. Fired 5 rounds 30-pounder Parrott percussion shell, 3 rounds 12-pounder rifle howitzer percussion shell. At 11:30 [sic] ceased firing, secured batteries, and proceeded to Point Lookout.

Abstract log of the U. S. S. Commodore Read, September 8, 1863, to June 21, 1865.

September 8, 1863.—At 1:25 p. m. received crew on board and put ship in commission, navy yard, New York.

September 12.—At 7:15 a. m. proceded to sea.

September 15.—Anchored at navy yard, Washington.

October 5.—At 12 meridian, Lieutenant-Commander Magaw came on board and took charge.

October 6.—Left the navy yard and proceeded down the river (Potomac).

March 7, 1864.—At 8:10 a. m. got underway and stood up the Piankatank River, the *Jacob Bell* and *Fuchsia* ahead and the *Freeborn* and *Currituck* following, shelling the woods at intervals as we passed. At 10:30 anchored at Piankatank Muds and sent the *Freeborn* and *Jacob Bell* with Captain Parker's barge and our second cutter manned and armed up to Freeport, where they found the *Titan* destroyed by fire. At 2:20 p. m. the boats returned to the ship, with a metallic life boat in tow, captured from the enemy. At 2:30 lost a ladle, shot away from the forward pivot gun. At 2:50 got underway and stood down the river in the same order as we came up. At 3, sent the second cutter manned and armed to Von's Point [sic] and destroyed six boats. At 3:40 second cutter returned and we proceeded down the river. Expended during the engagement the following ammunition: For 100-pounder rifles, 39 charges, 30 percussion shell, 9 5-second shell; for IX-inch guns, 16 5-second shell, 2 shrapnel; for 24-pounder howitzers, 14 charges and shrapnel, 2 charges and shell.

March 8.—At 2 p. m. off Mathias Point [Potomac River]; went to general quarters and commenced shelling the point. At 2:30 ceased

firing and secured the battery and proceeded up the river. In company with the *Dragon* anchored off the Nanjemoy.

April 12.—At 4:20 p. m. met the *Teaser* off Smith's Point standing up river, communicated with her and then stood up river. At 5:30 p. m. went to quarters and loaded the guns. At 6:15 fired 2 100-pounder shells into the woods on Shipping Point; also 3 shells, IX-inch. At 7 turned and stood down river. At 9:30 anchored off Nanjemoy.

April 29.—At 12:15 p. m. anchored off Mathias Point. The *Teaser* and *Primrose* opened fire on the point; ceased firing at 12:30. At 12:40 came to anchor off the point, sent the first cutter with an armed crew on shore in charge of Acting Ensign C. Ainsworth; the captain also went on shore with the gig and an armed crew with one boat from the *Teaser*, and two from the *Primrose*. At 2 called the first division to quarters and opened fire on the point; ceased at 3. Expended 18 100-pounder shell and 5 IX-inch shell.

May 9.—At 5:15 a. m. came to anchor off Nanjemoy Stores. At 5:30 the *Teaser* came alongside; the first cutter and the armed men and officers returned on board. At 1:15 p. m. came to anchor off Aquia Creek, lowered the first and second cutters to pick up some of the Union soldiers that had left the Virginia shore on rafts. At 4:15 sent armed first and second cutters on shore, called the first division to quarters, and trained the guns to protect the boats. At 5:10 the boats returned, bringing Captains Edwards and McAllan, both of General Grant's staff, with dispatches; secured the battery and got underway; proceeded up the river and at 10 came to anchor off Alexandria and landed 5 prisoners, 4 wounded soldiers, and 2 army officers. At 11:30 got underway and stood down river.

May 31.—At 3:20 p. m. got underway, also all the other vessels lying off Port Royal [Va.] and proceeded down the [Rappahannock] River. At 3:35 called all hands to quarters and commenced to shell the woods on both sides of the river. At 5 got aground off Port Tobacco [Va.]; succeeded in getting off at 7 and proceeded down the river; commenced shelling the woods on the way down; at intervals fired with muskets. Expended 49 IX-inch charges. At 8 ceased firing and signalized to anchor.

June 1.—At 4 a. m. proceeded down the river. At 8 came to anchor, shelling the banks with grape and canister on both sides of the river. Ceased firing and came to anchor.

June 12.—Assisting in transporting troops from the transports off Pope's Creek [Potomac River]. At 11:20 p. m. the transport *Favorite* got aground and we rendered her assistance.

June 15.—At 2:10 p. m. first cutter with armed crew composed of 12 men, *Fuchsia's* crew, and 1 officer, Acting Master Street in charge, proceeded into Machonac [Machodoc] Creek to search for the *Eureka*. Fired three blank cartridges at intervals of an hour as a signal to recall the *Eureka*. At 3 the gig with armed crew, with Acting Master Smith and Acting Ensign Dunn, proceeded up the creek. At 5:30 *Eureka*, with gig, first and second cutters, returned; brought one of the *Anacostia's* men, accidentally shot. Charles Davis, soldier, one of the men landed on the south side of the Potomac River and belonging to the *Sophronia*, was found missing on the return of the expedition; also two Spencer rifles belonging to this vessel.

June 18.—At 5:40 all boats returned from shore, cleared ship for action, information having been received that the enemy was advancing toward the river. Union troops returned to Layton's wharf. At 7:30

opened fire on the west shore of the river with No. 2 pivot and broadside guns. Expended by 100 [pounder] pivot, 6 percussion shell, by No. 1 broadside, ——; by No. 2 broadside, 6. At 8:10 ceased firing.

June 20.—First and second cutters employed in embarking troops. At 9:45 a. m. took transport steamer *Favorite* in tow and proceeded down the river. At 11:45 beat to quarters and opened fire on the north side with 100-pounder rifle and port broadside guns. Expended, No. 1 pivot gun, 1 10-second shell; No. 2 broadside, 2 5-second shrapnel; No. 1 broadside, 2 10-second shell, 1 5-second; No. 2 pivot, 2 percussion.

September 15.—At 4 p. m. came to anchor off Stingray Point [Rappahannock River].

September 29.—At 2 p. m. the second cutter, armed, left the ship to fish, under cover of our guns. At 2:20 the boat was attacked by a party of guerrillas, numbering upward of 40; immediately went to quarters and opened fire on them from the vessel. At the first discharge of the forward pivot gun the gun spiked itself. Got underway so as to use our battery more effectively. At 3:20 came to anchor and beat retreat. Number of charges fired, 20 from IX-inch broadside and 7 from the pivots.

October 3.—At 8:15 p. m., off Mill Creek, beat to quarters, and fired 5 shell from No. 2 pivot gun and 2 from No. 1 broadside at a signal light seen in the direction of Mill Creek, which was put out at the first fire. At 9 beat the retreat and stood down the river. Cruising in the mouth of the Rappahannock.

October 18.—At 7:20 a. m. entered the mouth of the Great Wicomico River. At 9:30 went to quarters, and shelled the woods in the vicinity of the Great Wicomico River. Number of shots fired, 50; the forward pivot gun spiked itself at the first discharge. Anchored off Cockle's [Cockrell] Point. At 3 p. m. commenced shelling the woods; fired 6 shots from No. 2 pivot gun. At 5:30 fired 4 shots from No. 2 pivot at pickets ashore.

October 20.—Cruising in the mouth of the Rappahannock. At 9:15 came to off Deep Creek to communicate with the shore. The second cutter, in charge of Ensign Shurtleff, was fired upon while attempting to land with the. boat's crew. Immediately went to quarters and shelled the enemy. Number of shots fired, 26. Came to anchor off Jones Point. At 4:30 p. m., off Jones Point, sent second cutter ashore, in charge of Ensign Shurtleff and an armed boat, to bring off a family under flag of truce. At 5:30 p. m. went to quarters and shelled the shore. Number of shot fired, 19. Proceeded down the river in company with the *Freeborn*. At 6:30 came to and fired 3 shots at the shore. At 6:40 proceeded down the river, fired 2 shots from after pivot gun at Mosquito Point. Came to anchor off Sturgeon Creek.

October 25.—At 9 a. m. came to anchor off the Great Wicomico River, in company with the *Yankee*, *Freeborn*, and *Mercury*. At 10 the *Don* arrived from up the [Chesapeake] Bay. In company with the before-named vessels followed the *Don* into the mouth of the river, and at 10:30 came to anchor off Sandy Point. The *Don* opened fire and the *Mercury* anchored. The different vessels of the squadron opened fire and shelled the woods. A boat was sent from the *Don* to fire some houses. After many discharges from the No. 1 forward pivot 100-pounder Parrott of this vessel, rifled gun, the vent of which had to be drilled after each discharge, it became permanently disabled. At 1:30 beat the retreat. Number of shells fired, 107. At 5:30 p. m., in company with the other vessel, proceeded down the river and anchored at 8 in the mouth of the Rappahannock.

October 26.—At 6 a. m. got underway, in company with the *Don*, *Yankee*, *Freeborn*, and *Cœur de Lion*, and stood up the river. At 9:30 came to off Carter's wharf. The *Don* sent a boat on shore, which was fired upon. Went to quarters without delay and shelled the woods. At 10:15, two boats from this ship and two from the *Don*, in charge of Ensign Shurtleff, landed and captured the following stores: Twenty-eight bags of oats, 12 bags of sweet potatoes, 38 bags of corn. At 11:40 a. m. hoisted on board 2 canoes, at 12 proceeded up the river. At 3:30 p. m. took on board a boat which we had captured.

October 27.—At 8 a. m. anchored off the village of Tappahannock, in company with the *Don*. At 9:10 proceeded up the river. At 10 discovered the *Yankee*, *Freeborn*, and *Cœur de Lion* coming down, shelling the woods; went about and cleared for action. At 10:30 the fleet proceeded down the river and at 11:50 came to anchor.

February 21, 1865.—Arrived off Urbana at 9 a. m. Fired 2 shells from No. 2 pivot at enemy. At 10:20 proceeded down the river.

February 27.—At 8:30 p. m. heard sharp musketry firing on shore near Butler's Hole; went to quarters, and fired 6 shell in the direction of the noise. At 11:30 discovered lights and suspicious noises on shore near the mouth of Mosquito Point; beat to quarters, battery cast loose, and one round fired in three minutes. Whole number of shell fired, 18, nearly all the shell from the rifled guns tumbling.

March 6.—At 12 noon captured a sloop off the cliffs, loaded with salt and hides. Took from her J. Warren and William Deer, and held them prisoners of war. After unloading the sloop we blew her up with a IX-inch shell, and proceeded up the river. Fired 2 shell at the enemy 12 miles below Port Royal [Va]. At 3:50 p. m. the fleet passed Port Royal. At 7:30 came to anchor below the obstructions and communicated with transports. At 11 steamer *Yankee* arrived and anchored. At 8:15 Captain Hooker and Colonel [Joseph] Roberts left the vessel in the gig for Fredericksburg. At 11:30 heard sharp musketry firing on the north shore. Colonel Roberts came on board and made this vessel his quarters. At 10:10 army gunboat *Chamberlain* arrived from up the river. At 10:30 proceeded up river, followed by the *Yankee*, *Chamberlain*, and four transports.

March 8.—At 7 a. m. heard firing up river; turned round and started in the direction of the firing; went to quarters. At 9:30 beat to quarters, and fired 7 shell in the direction of the enemy.

March 13.—At 8 a. m. heard heavy firing down the [Rappahannock] River. At 8:30 spoke the *Morse* and *Mosswood* below Paris, engaging a battery. Came to off Paradise [battery?] and fired upon a battery 92 shots. At 11 the *Delaware* and *Morse* proceeded up the river. At 10 sent second cutter ashore, armed, in charge of Acting Master E. S. Shurtleff, to make a reconnoissance and inspect battery. At 10 ceased firing.

April 6.—At 7:10 a. m. anchored off Broad Creek. At 12:05 p. m. the fleet proceeded up the creek. At 12:20 we anchored, the *Freeborn*, *Heliotrope*, and *Cœur de Lion* continuing up the creek. At 12:40 opened fire and shelled the woods. At 2:20 got underway and followed the *Heliotrope* out of the creek. Whole number of shell fired by us in Indian Creek, 36. At 3 entered Dimer's Creek, preceded by the *Freeborn*, *Cœur de Lion*, and *Heliotrope*. At 3:10 anchored; opened fire and shelled the woods in the vicinity. At 4:30 proceeded out of the creek. Number of shell fired by us in Dimer's Creek, 39.

June 21.—At 2 p. m. the *Commodore Read* was put out of commission, navy yard, Washington, D. C.

Abstract log of the U. S. S. Currituck, November 27, 1862, to January 14, 1865.

November 27, 1862.—Up the Rappahannock River. At 1:30 p. m. saw some of our pickets ashore; learned from them that Fredericksburg had been captured by our Army. At 2:30 signalized the squadron to go at full speed and prepare for action and never surrender. At 5:20 p. m. came to anchor at Port Conway.

November 28.—At 10 a. m. steamed down opposite Port Royal; anchored in line of battle with the squadron. At 10:30 sent the gig on shore with a flag of truce in charge of Lieutenant McCrea, commander of the fleet, to communicate with the rebel officer at Port Royal.

December 4.—From 4 to 7 a. m. saw on the shore six rebel riflemen and one cavalryman. The *Cœur de Lion* blew her whistle (danger). Hove up, and we were heading down the river when the *Cœur de Lion* fired three times. When we got alongside Captain Shankland ordered him to cease firing and to follow us. At 8 we anchored opposite Port Royal. The captain of the *Cœur de Lion* came on board and reported that he saw about fifty men at work throwing up rifle pits in front of him, and that was the reason he fired. At 10:15 went up to where the *Cœur de Lion* fired, and saw several riflemen; returned and came to anchor at our former place. At 4:15 p. m. the enemy opened fire on the fleet from the hill below the town of Port Royal, the first shot striking near the *Cœur de Lion* and the second near to us. We instantly called all hands to quarters, signaled the fleet to prepare for action, hove up anchor, and opened fire on the town, directing a part of the battery on the hill until they ceased firing. We then proceeded down the river about 2 miles and came to anchor (all of the fleet) at 5:45 p. m.

December 4.—(Engagement at Port Royal [Va.] corrected and continued). At 4:15 p. m. at anchor off this place. The enemy opened fire on the flotilla from a battery situated on the top of a high hill covered with trees and bushes, distant about 2 miles S. S. E. of the town, the enemy using solid shot, well directed. Called all hands to quarters and made signal to the flotilla to get underway and commence firing on the town and battery Hove up anchor and steamed down abreast of the town. Continued a constant fire upon the town with broadside guns, using 5-second shell and near-firing charges with apparent good effect, while our fire from the rifle was directed toward the battery, using distant-firing charges and 15-second shell, common. At 4:45 the *Anacostia*, in turning around, slightly touched the bottom and received a light volley of musketry from the town, but not any damage. At 5:15, it being deemed useless longer to continue firing, as no sensible advantage could be gained by so doing, and the bank of the river above being lined with rifle pits, we proceeded in line of battle down the river. At 5:30, in passing a low bank near the residence of a Mr. Pratt, the enemy opened fire with several fieldpieces and slightly damaged the steamers *Jacob Bell* and *Anacostia*. We returned the fire with grape from 32-pounders and silenced the battery. The *Jacob Bell*, *Anacostia*, and *Cœur de Lion*, in passing the house of Mr. Pratt, discharged their batteries and penetrated the house with several shells. Continued on our course and came to anchor at 5:45 on Oakên Brow fishing shore. Sent a boat in charge of Mr. Thomas Nelson, executive officer, with a crew of five men, all armed, to the shore, in search of a picket guard, in order to obtain means of communication with Major Keenan, commanding military force at Port Conway. At 9:45 Major Keenan came on board and brought information that five regiments of rebel troops were encamped in the vicinity of Port Royal, consisting of cavalry,

artillery, and riflemen, intelligence furnished to him by two deserters from the rebel Army, who had just come into his camp.

December 10.—At 2:30 p. m., in passing by the foot of Brandywine Hill through Tobago Bay, the enemy opened fire with six fieldpieces, one of which was a very long-range gun and supposed to be a 20-pounder Parrott rifle. Returned the fire with our rifle gun, fired two shells. At 2:45 came up with the fleet. At 3:15 p. m. the enemy opened fire on the flotilla and struck the coal schooner *Sarah Minge*. The *Yankee*, *Satellite*, *Anacostia*, and *Jacob Bell* opened fire. At 3:30 received orders to open fire, which we did with the rifle gun and 32-pounders, using distant-firing charges and 15-second shells. At 4 a shell from the enemy struck and penetrated our vessel's side forward of amidships about 12 feet. Sent carpenter with two hands to plug up the hole through which rushed a large stream of water. Started the donkey engine and rigged the main pumps, while the remainder of the men continued firing. At 4:15 received orders from senior officer to cease firing and house topmasts. Water in the vessel increasing rapidly, crew trying to stop the leak. While thus engaged another shell struck us on starboard side, which, after passing through the side into the engine room, broke the blower engine, exploded, and wounded two men. Hove up anchor and steamed out of the enemy's range; proceeded up the river about one-fourth mile and anchored.

December 11.—At 2:40 p. m. hove up anchor and proceeded down the river. Discharged our rifle and 32-pounders at the spot where the rebel batteries were planted on Brandywine Hill, fired six shells and proceeded on our course. Anchored off Bristol [Brisco] mines.

December 12.—At 8:15 a. m. hove a line to the *Wyandank* to assist her in towing two schooners down the river. Espied a body of cavalry, rebel, on the bank. At 4 steamer *Colonel C. G. Sawtelle* came alongside in charge of a captain of infantry, bound up the river, with stores for General Burnside, but it being unsafe to proceed on account of the rebel cavalry lining the banks of the river, he returned toward the mouth of the river upon the advice of Captain Linnekin.

December 28.—At 6:40 discovered a schooner inshore; sent the cutter with an armed crew in charge of the executive officer, Thomas Nelson, who brought her within hailing distance. She proved to be the *Exchange*, of East River.

January 2, 1863.—Steaming up the Piankatank. At 2 p. m., off Dudley's Creek, saw a heavy smoke over the trees. Attempted to enter the creek, but got aground. Fired a shot from the rifled gun in the direction of the smoke. The *Ella* towed us off. Sent on shore the cutter in charge of Mr. Nelson to ascertain the cause of the smoke. The boat returned, having ascertained that a schooner had been set on fire. Opened fire into the woods. Expended four 5-second 32-pounder and two 10-second 32-pounder shells.

January 3.—Steaming toward Wicomico Creek. At 9 steamed out into the bay in chase of a sloop. Came up with the sloop and sent the cutter to board her. Proved to be the *Potter*, of Baltimore, bound to Baltimore. Her captain said she was loaded with oysters. On inspection she was found to have in her hold 2 bags of leaf tobacco, a number of raw hides, a large quantity of old rags. Brass and iron were found covered up by the oysters. Took her in tow and steamed toward the Rappahannock River.

January 13.—Dividing Creek [Virginia]. At 2 a. m. saw a sail standing in; sent cutter to board her, Mr. Nelson in charge; took possession of her as a prize. She proved to be the *Hampton*, of Baltimore. At 8

a. m. chased a canoe into Indian Creek. Fired two shots from the rifled gun, but failed to bring her to. Steamed into Indian Creek in pursuit about 1 mile. Sent the gig to take possession of the boat, the men having left her and made for the woods. Found 2 barrels of whisky on her.

January 20.—At 9 a. m. saw a large canoe standing in for Indian Creek; gave chase. Fired three rifled shell, but failed to bring her to. Followed her into the creek and sent the cutter and gig to search after her. Boats returned with 2 canoes and 3 barrels of whisky and other stores.

January 23.—At 10 a. m. came to anchor in Jackson Creek and sent on shore gig and cutter armed. At 12:15 p. m. the boats returned with 2 prisoners and towing a sloop, which had been scuttled. They were fired into by a party of cavalry, only two balls taking effect, one going through the gig and the other a spent one, slightly grazing Mr. Nelson below the knee. As soon as the boats got alongside, dropped the kedge from the stern and swung broadside to and opened fire on the place with shells. At 1:15 ceased firing, having expended 42 rounds.

January 25.—At 7:05 saw two canoes pulling for the shore; steered for them; hove them to by a rifle shot; brought them alongside. They were loaded with sundries and manned by two men. At noon, off Tabb's [Tapp's] Creek. At 2 p. m. boats returned from shore, having captured four canoes loaded with sundries, whisky, dry goods, etc.

January 26.—At 1:05 boats returned to the ship, having captured 2 canoes and 1 sloop, the *Queen of the Fleet*, of Accomac. Five men found asleep on them were taken prisoners.

February 2.—At 10 a. m. the gig and second cutter went and destroyed a schooner lying up Indian Creek.

March 23.—Came to anchor in the Piankatank River. At 10:45 a. m. discovered a canoe bound up the Piankatank River; gave chase and fired he rifle gun, which brought her to and alongside, she having two men in her.

March 30.—At 1 p. m. weighed anchor and steamed over to the Rappahannock River and at 2:40 anchored in the mouth about one-fourth mile offshore. Sent second cutter, in charge of Mr. Hall, to bring the canoes alongside that we left here on the 28th. The canoes were destroyed by order of the captain.

April 1.—At 5 p. m., seeing a body of men having the appearance of rebel soldiers, hove up anchor and steamed up toward the place where the men were lately seen, but on arriving abreast they were gone. Fired a 32-pounder shell in order to bring them from under cover, but saw nothing further, and returned to our anchorage (mouth of Rappahannock River).

April 3.—At 6 a. m. steamed out of the river in company with the *Anacostia*. At 8:30 anchored about 3 miles up Indian Creek. Sent the gig in charge of Mr. Nelson, executive officer, and second cutter in charge of Mr. Hall, master's mate, with twenty men, in company with two boats' crews from the *Anacostia* on shore. At 2 p. m. the boats returned, having on board the following stores taken from the house of Mr. James Hurst: Eighteen small boxes of tobacco, from 20 to 23 pounds each; 4 large boxes tobacco, 104 to 123 pounds each; 4 sacks salt. The four sacks salt were transferred to the *Anacostia* for ship's use. At 6 p. m. steamed up the creek about 100 yards; saw a number of cavalry on shore and fired a 32-pounder shell at them.

May 12.—At 6:30 a. m. let go anchor in Carter's Creek. At 6:40 sent first cutter with an armed crew in charge of Mr. Nelson farther up the creek to reconnoiter. At 10:30 the boats returned, bringing a large quantity of bacon. At 12:45 p. m. steamed up Urbana Creek; sent first and second cutters on shore, and at the house of Mr. Bailey found a quantity of barrels of whisky, bags of flour, bags of coffee, barrels of molasses, which we brought on board, assisted by boats from *Primrose* and *Satellite*. At 5 p. m. boats returned after finishing, having taken 24 barrels whisky, 2 barrels sirup, 26 bags of flour, 1 barrel of New England rum, 2 bags of coffee, 100 shoulders, 1 barrel of white sugar.

May 13.—At Urbana. At 1 p. m. an armed boat's crew from each ship went on board the *Primrose* and steamed down the river about 3 miles and landed. At 9 p. m. the *Primrose* returned with boats, bringing large quantities of goods of various descriptions.

May 14.—At 8:15 a. m. Executive Officer Nelson, with an armed boat from each ship, proceeded up Urbana Creek in pursuit of a schooner. At 10:30 boats returned with schooner, name unknown.

May 18.—At 8:40 a. m. came to anchor in Dividing Creek in company with the *Wyandank* and *Satellite*. Sent boats from all the vessels ashore. At 11:30 they returned, having a scow in tow, loaded with lumber. Put it on board the *Wyandank*. From 12 to 4 p. m. employed transporting lumber from Mr. Yerby's sawmill on board the *Wyandank*.

May 21.—At 4:30 a. m. got underway and steamed up river (Rappahannock) in company with the *Satellite* and *Anacostia*. At 6 a. m. discovered a schooner up the river. We immediately dispatched the *Satellite* on ahead to capture her. At 7:15 the steamer came up with her. She proved to be the *Emily*, of New York, with a general cargo on board, having run the blockade, the men having left her after setting fire to her. At 8:20 a. m. steamed down the river in company with the *Anacostia*, *Satellite*, and prize schooner.

May 30.—At 8:20 a. m. came to anchor, the fleet abreast of the town of Tappahannock. Sent the first cutter on shore in charge of Mr. Nelson. He returned at 9:30, bringing refugees from Richmond. At 10 first cutter went on shore again; also boats from the *Anacostia*, *Primrose*, and *Satellite*. Continued shelling the woods at intervals. At 1 p. m. the boats returned. Expended: Rifle, 5-second, 2; percussion, 1; 6-inch shell, 10-second, 9; 6-inch shell, 5-second, 2. At 1:30 first and second cutters went on shore in company with boats from the other vessels and destroyed a large quantity of wheat by burning the building in which it was stored.

June 1.—At anchor off Urbana. At 12:30 a. m. sent the first cutter with an armed crew up the river to reconnoiter; returned at 4:45, bringing four prisoners.

June 17.—At 2 p. m. Mr. Hall went ashore in first cutter in company with boats from other vessels of the fleet. At 3 p. m. they returned. Saw rebel cavalry ashore; opened fire on them, and fired one round from starboard battery. Expended two 6-inch shell.

June 21.—Off Cockpit Point. At 2:30 p. m. saw some of the enemy on the hill; got underway and opened fire, shelling the woods. At 3:15 ceased firing and returned to our former anchorage. Expended thirteen 10-second 6-inch shell, three percussion shell, three 10-second shrapnel shell.

June 23.—At 1:20 p. m. off Cockpit Point. Fired at some rebels seen on shore. Expended four 10-second shell.

July 20.—At 10 a. m. sent twenty armed men, in charge of Mr. Felix and Mr. Hall, to look for blockade runners. Hove up anchor and steamed over to Dividing Creek. At 11:45 men returned, having captured two canoes, five barrels whisky, and several other articles. Steamed farther up the creek and sent first and second cutters on shore to reconnoiter; they returned with one canoe at 4 p. m.

August 11.—Sent an expedition on shore to capture three men, of whom we had received information that they were cutting down trees on Windmill Point, laid down on the chart as landmark for navigators. At 11 the captain went on shore, and upon examination found that a great many trees had been cut down, and that seven piles of split rails for fences and a large quantity of cord wood were still on the ground. At 3:30 the first cutter returned, having succeeded in their expedition and bringing on board three prisoners suspected of stealing canoes and also doing much mischief about the place. At 7 p. m. sent the first cutter with armed crew, in charge of Acting Ensign [Henry] Walters, of the *Reliance*, to capture two soldiers (rebel) who were reported to be at home. At 9:50 first cutter returned, bringing one prisoner, John Robbins, late of the rebel Army.

August 21.—At 8:25 anchored the steamers off Union wharf. At 8:45 sent the first cutter, in charge of Mr. Havens, to assist in towing off a large scow, which when first seen was loaded with cattle, which, however, succeeded in landing, although hotly chased by the *Satellite*. At 9:20 sent the second cutter to assist in the same work, which was accomplished by 10, when we sent two other boats to get off another scow larger than the first. Finding it hard and fast on the sand and the tide falling, we effectually destroyed it by cutting it in two. Fired two shells from rifle in the surrounding woods. At 2:45 p. m. sent gig, in charge of Paymaster Clarke, on shore to reconnoiter the opposite side of the creek. He learned from a negro that a canoe lay hidden up the creek, which he captured and brought off to the vessel. About the same time the boats returned from up the creek, bringing on board as prisoner Benjamin F. Welles, with two canoes and two boys, his sons. They carried on a trade between that place [Totouskey Creek?] and Fredericksburg. The man and one canoe were detained and the boys permitted to return to their home.

August 26.—At 7:15 p. m. came to anchor in the mouth of Wicomico River. Lieutenant [John W.] White, of the U. S. revenue steamer *Reliance*, came on board and informed us of the capture of two of our steamers on the Rappahannock, viz, the *Satellite* and the *Reliance*. At 8:49 got underway and proceeded toward Point Lookout to report to Lieutenant-Commander Magaw the affair of the steamers said to be captured.

August 27.—At midnight arrived at Point Lookout. Sent the first cutter on board the *Yankee*, which soon returned, when we proceeded to Piney Point, where we dropped anchor at 3 a. m. [The] captain having reported to Lieutenant-Commander Magaw on board the U. S. S. *Dragon*, we proceeded up the river toward Blakistone Island. At 11 p. m. weighed anchor and steamed down the bay in company with the *Dragon*, *Freeborn*, *Jacob Bell*, and *Tulip*, Lieutenant-Commander Magaw being on board the *Dragon*.

August 28.—At 5:30 a. m. (having used all possible caution in entering the river, and having burned several signal lights to ascertain if our vessels were there), we anchored in Butler's Hole, followed by the *Tulip* and *Freeborn*. Sent the first cutter on shore in charge of Ensign Felix

to ascertain the fate of the boats, viz, *Satellite* and *Reliance*. He returned with the information that they had been attacked and captured on the night of the 22d by a party of rebels, who immediately took them up the river; his informant supposed them to be at Port Royal. The *Dragon* arrived at 6 a. m. and anchored. At 6:48 sent the first cutter on shore and brought off Mr. Spillman, a citizen residing on Windmill Point, who gave additional information respecting the capture of the above-named boats. At 7:20 the *Jacob Bell* arrived and anchored. At 2 p. m. captain went on board the *Bell* and returned at 2:30, when we descried the *Commodore Jones* and *Commodore Morris*. The captain went on board the *Morris* and returned with orders to follow him up the river. Hove anchor and steamed after him, followed by the vessels of the Potomac Flotilla. At 7: 30 p. m. anchored off Urbana.

August 29.—At 9:15 a. m., the captain having obtained permission from the senior officer to bring off the wounded officers and men of the steamers *Satellite* and *Reliance*, weighed anchor and steamed in toward the house where they were and anchored off Bailey's farm. At 9:45 sent the doctor in the first cutter under a flag of truce, in charge of Mr. Thomas Nelson, executive officer, to the house of Captain Bailey, where the wounded men were lying, but the surgeon finding that Acting Ensign Walters was too weak to move with safety, returned in the first cutter at 11:45. At 11:55 the captain and doctor went on board the senior officer's ship to report the facts just ascertained. At 12:55 p. m. the first cutter, in charge of Mr. Nelson, accompanied by the doctor, went on shore and returned at 3 p. m., bringing on board Acting Ensign Sommers and John Tye, boatswain's mate, both of the *Satellite*, and severely wounded. At 3:30 weighed anchor and proceeded down the river with the rest of the fleet. At 5:40 anchored in Butler's Hole.

September 1.—At 7:20 a. m. John Tye died from wounds received at the capture of the *Satellite* by the rebels.

October 5.—At anchor in Butler's Hole. At 7:45 p. m. saw a light up the river; steamed for it. Proved to be signal lights on Parrott's Island; fired two shell in toward it, and at 12 midnight heard heavy firing in the direction of Yorktown.

October 24.—At 11 a. m. saw a schooner at the mouth of the river heading for the Piankatank. At 11 the *Fuchsia* came alongside and commenced coaling from this vessel. At 12:30 p. m. *Fuchsia* cast off and steamed in chase of the schooner; returned at 4, having the schooner in tow.

January 1, 1864.—At 1:10 p. m. sent first cutter armed and equipped in charge of Mr. Nelson, with two boats from the *Anacostia*, the whole under the command of Acting Master Provost, on shore to reconnoiter. At 3:30 party returned, bringing with them several head of cattle, one white horse, taken from the farm of Charles Lelan, a prominent secessionist, and a rebel enrolling officer.

February 24.—At 9:15 a. m. steamed up the Wicomico River, followed by the *Jacob Bell*. At 11 anchored near the head of the Wicomico. At 11:30 sent the gig, in charge of Acting Master['s Mate] Hall and Acting Ensign Walker, of the *Jacob Bell*, farther up the river to destroy some schooners; set two on fire, the *Gratitude* and *Charles Henry*. At 12:30 p. m. sent second cutter, in charge of Ensign Felix, on shore for wood; saw some rebel cavalry. At 1:30 the boat returned; fired two shots at some cavalry seen on a hill.

March 7.—At 8:15 got underway in company with the fleet and stood up the Piankatank. At 9:30 commenced shelling the woods, and

expended the following ammunition: Twenty 8-pound charges for 32-pounder, eight 5 second shell, six 10-second shell, four stand canister, two stand grape, eight 2-pound charges 20-pounder Parrott rifle, one 5-second common shell for rifle, three 10-second common shell for rifle, three 15 second common shell 20-pounder rifle, one 10-second shrapnel 20-pounder rifle.

April 21.—Got underway with the fleet and proceeded down the river. At 7 p. m. the *Eureka* steamed in toward the shore and commenced firing; the *Yankee*, *Fuchsia*, *Freeborn*, and *Leslie* commenced also, the last three mentioned vessels being underway. From 8 to midnight the *Freeborn*, lying in under the south bank, fired at intervals of thirty minutes during the watch.

April 22.—From midnight to 4 a. m., the *Freeborn* and *Teaser* shelling the south bank at intervals. At 8:35 the flagship signalized "Get underway." All the fleet complied with the order, the *Yankee* proceeding up the river. The fleet steamed close inshore, and at 9:05 began to shell the woods. At 10:15 fleet ceased firing and anchored. At 11 a. m. the *Yankee* returned and made fast to the *Commodore Read.* Expended five 10-second 32-pounder shells and three 10-second Parrott rifle.

September 17.—Cruising off Coan River. At 2:30 a. m. heard a volley of musketry in the direction of Coan River and soon discovered the signals agreed upon of danger for assistance by the first cutter. Proceeded to the mouth of the river and entered; fired the 20-pounder rifle. Soon after saw the first cutter coming out with a canoe in tow. She came alongside, and Acting Ensign Thomas Nelson came on board and reported 1 man killed, 1 wounded, and 2 prisoners captured in the act of running the blockade in the canoe above mentioned. At 3:20 shelled the woods; at 4 ceased firing.

September 19.—At 6:15 p. m. saw a canoe coming out of the river (Yeocomico); fired six shell at her from the rifle. She succeeded in making the land and got away.

October 24.—At 1:15 p. m. Acting Ensign A. Felix went on shore in charge of the first cutter. At 2:30 he returned, bringing two canoes; also a soldier belonging to Captain Baker's battery, who was taken on shore (at Point Lookout) and delivered to the provost-marshal. The canoe that he was in was cut up by order of the captain, and the other was taken up to St. Inigoes Creek and left there.

Abstract log of the U. S. Schooner Dan Smith, January 1, 1863, to July 28, 1863.

June 23, 1863.—Anchored off Quantico Creek. At 1 p. m. enemy reported in sight; went to quarters, opened fire with the port battery, and discharged 16 rounds.

July 1.—Off Quantico Creek. At 10 a. m. enemy reported in sight; fired 7 charges from port battery.

Abstract log of the U. S. S. Don, May 16, 1864, to July 31, 1865.

May 16, 1864.—Off navy yard, Boston, Mass.

May 20.—Proceeded up the Potomac River and reported to Commander F. A. Parker.

October 26.—At 6 a. m., in company with the *Commodore Read*, *Freborn*, *Yankee*, and *Cœur de Lion*, proceeded up the Rappahannock River. At 9 discovered a large boat near the north shore; sent second and third cutters and dingey, in charge of Acting Ensign J. J. Brice, to take the boat. Upon our boats approaching the shore they were fired upon by a party of the enemy concealed in the bushes; opened fire with our starboard battery, the *Commodore Read* doing the same; recalled our boats alongside; ordered the *Commodore Read* to send a boat and 25 men on shore in charge of Acting Ensign Shurtleff; sent a party with 3 boats on shore to aid; sent a party of 90 men on an expedition on shore.

January 20, 1865.—Navy yard, Washington, D. C. At 10 a. m. made ready for departure. Hon. F. P. Blair came on board and Commander Parker and staff left the ship. At 12 m. proceeded down the river.

January 21.—Anchored off City Point [James River, Virginia], at 3 p. m. and communicated with the shore. At 4 stood up the river.

January 22.—At 7:45 a. m. passed through upper bridge and came to anchor off Aiken's Landing, James River. Hon. F. P. Blair left the ship. From 8:30 to 9 p. m. heard the firing of musketry, with an occasional sound of heavy guns up the river.

January 23.—At 5:30 p. m. stood down the river. At 7 came to anchor off City Point. From 8 to midnight heavy firing up the river.

January 24.—Anchored off the *New Ironsides*, off Norfolk, Va.; communicated with her. Commodores Godon and Radford came on board.

January 25.—At 7 a. m. got underway and followed at very slow speed the *New Ironsides* down the river (from Norfolk). At 8:45 communicated with the *New Ironsides* and stood down at full speed. At 10 anchored astern of the *Minnesota*, and received from her three howitzers, ammunition, and 19 men, to be taken to the *Ironsides*. At 12:30 proceeded up James River. At 7:30 went alongside the *New Ironsides*, and delivered the howitzers, ammunition, and men.

January 26.—Followed the *New Ironsides* up river at slow speed, and at 11:30 a. m. came to anchor off Bermuda Hundred. At 12:30 p. m. rigged torpedo spars on our bows.

January 27.—Vice-Admiral D. G. Farragut and Lieutenant-Commander Prichett came on board for passage (off Bermuda Hundred).

January 28.—At 4:45 p. m. passed Thomas' Point and stood up Severn River [Maryland]. At 5:30 anchored in Annapolis Harbor. Vice-Admiral D. G. Farragut and Lieutenant-Commander Prichett went on shore.

April 12.—At 10 a. m. squadron came to anchor off Port Royal, Va. At 11 got underway and steamed up river. At 1:30 p. m. stopped ten minutes and captured a boat with 4 men bound down river with contraband goods. Took from boat 1 barrel oil, 2 bags meal.

April 17.—At 6:10 stopped off Freestone Point; sent three armed boats in charge of Acting Ensign Hallock, and captured schooner *William H. Price*, anchored near the Virginia shore.

Abstract log of the U. S. S. Dragon, March 22, 1863, to March 27, 1865.

March 22, 1863.—Lying at anchor off Aquia Creek.

June 17.—Off Aquia Creek. At 3 p. m. shelled Aquia Creek. Expended 8 shell from the rifle howitzer. At 5 p. m. condemned 24 rounds of shrapnel and 9 rounds of canister, damaged by water.

June 20.—At anchor off Belle Plain. At 9:30 a. m. went to quarters and shelled the woods. Expended: Rifled gun, 15 shell; howitzer, 9.

From 12 to 8 p. m. off Aquia Creek. At 1 p. m. took a pilot from the *Mahaska*, and proceeded to ——— Creek and shelled the woods.

June 21.—At Mathias Point sent the cutter ashore and destroyed a boat.

June 27.—At 4 p. m. arrived at Nanjemoy; anchored; captured two prisoners of war crossing the river.

June 29.—At 4:50 a. m. came to anchor off Mathias Point; sent the cutter ashore and burned a barn said to contain between $3,000 and $4,000 worth corn. Expended six 10-second shell.

September 16.—Cruising along the Virginia shore, in company with the *Teaser*. At 5 p. m. fired two 15-second and one 10-second 30-pounder rifle shell over the bluffs at Aquia Creek, but received no reply.

September 22.—At 12:30 fired three 10-second 30-pounder rifle shell into the woods at Mathias Point. At 12:40 fired three 10-second 24-pounder shell into the woods just below Mathias Point; received no answer and ceased firing. At 2 p. m. a boat went on shore at Pope's Creek [Maryland] armed, with Captain Hill, having heard news about smuggling goods into Virginia; searched the woods, but found nothing. At 6:30 Acting Master's Mate James W. Robinson was ordered to take a look up shore, and found the canoe in which the goods were taken over with muffled oarlocks.

September 23.—At 3:30 p. m. 50 of the First District Maryland Volunteers came down, with orders for us to cover them while they landed. At 4 the *Teaser*, *Resolute*, and army steamer *Stevens*, with troops, went up river. At 5 Acting Master's Mate James W. Robinson discovered a boat with six men in it and reported it to Captain Hill, who immediately sent him with the gig and five men armed. After reaching the beach he pursued them until the call was blown for him to return. He brought with him the boat and a small anchor. At 9:30 fifty men of the First District Volunteers, under command of Captain [Marvin P.] Fisher, landed, to scout through the country in the vicinity of Mathias Point. Acting Master's Mate James W. Robinson, of this vessel, was sent by Captain Hill as a guide and signal officer in case they were attacked by the enemy, so as to let our vessels see where they were. At 12 returned, finding no traces of the enemy.

September 24.—At anchor off Mathias Point, covering our troops on shore, the *Teaser* and *Resolute* lying close by. At 7:30 Acting Master's Mate Robinson was sent on shore to set fire to the wood on the point; set fire to it in three places and returned to the ship.

October 3.—At 6:15 a. m. got underway and ran down the river. At 7 let go kedge and sent a boat on shore to Dr. Stewart's house with five armed men, in charge of Acting Master's Mate Robinson, to find out if there were any signs of the enemy; the boat returned at 8, bringing three axes that were found in the woods on the point, which had been used in cutting down the trees, with the intention of building a battery; no signs of the enemy to be seen.

October 5.—At 9:25 a. m. fired two 10-second 30-pounder rifle shell on the bluff at Mathias Point. At 9:40 fired another 10-second 30-pounder rifle shell and one 5-second from 24-pounder howitzer in the bluff at Mathias Point.

October 7.—At 4:20 p. m. ran in nearer shore at Mathias Point. At 7, saw signal lights on the Maryland shore opposite Mathias Point answered on the Virginia side back of the point. At 7:10 went to quarters with the *Teaser* and fired eleven 30-pounder 5-second rifle shell and three 24-pounder howitzer shell, 11 shrapnel, 1 canister into the woods.

February 23, 1864.—At 7:05 captured a boat containing 3 men, 4 women, 5 children, and 2 contrabands; took boat in tow and stood up the river.

March 24.—Navy yard, Washington, D. C.

April 17.—Cast off from the wharf and proceeded down the river [Potomac].

April 21.—At 5:40 p. m. anchored off Corrotoman [Rappahannock River] with the fleet. At 6:40 the *Eureka* opened fire on Virginia shore. At 7 the *Commodore Read*, *Yankee*, and *Leslie* opened fire; ceased firing at 7:15. From 8 to 12 midnight occasional firing from our boats.

April 22.—Occasional firing from our fleet off Corrotoman from 12 to 4 a. m. At 8:10 went inshore and anchored. At 8:40 fired four 10-second shell from 30-pounder rifle at a house on shore; sent a boat, armed, on an expedition.

April 23.—At 6:30 p. m. fired one 10-second shell off Mathias Point.

May 30.—Stood down [Rappahannock] River and anchored off Punch Bowl at 9:30 a. m. At 9:40 expended one 10-second shell from 30-pounder and one shrapnel from 24-pounder at a suspicious party on the Virginia shore.

July 11.—From 4 to 8 p. m. shelled the different points from Occoquan to Potomac Creek, expending two 15-second and thirteen 10-second shells from 30-pounder and three shell and two shrapnel from 24-pounder.

November 18.—At 1 p. m. passed into Dividing Creek. At 1:30 opened fire on some cavalry. Expended nine 10-second shell, three 15-second shell, and two percussion shell from 30-pounder Parrott. From 4 to 8 p. m. still shelling the woods at Dividing Creek.

Abstract log of the U. S. S. Ella, August 10, 1862, to August 24, 1863.

August 10, 1862.—The ship was put in commission, New York navy yard.

August 13.—At 5 a. m. proceeded to sea.

January 2, 1863.—At 1:20 p. m. the *Currituck*, *Anacostia*, and *Ella* got underway and proceeded down the [Rappahannock] River. The rebels set fire to a schooner up the creek and the *Anacostia* and *Currituck* commenced throwing shell in the direction of the smoke. Fired three rounds from our forward gun. At 3:45 p. m. ceased firing, proceeded to the mouth of the Rappahannock River.

Abstract log of the U. S. S. Fuchsia, August 8, 1863, to August 5, 1865.

October 24, 1863.—At 12 m. cast off from the *Currituck* and steamed out into the bay [Chesapeake] in chase of a schooner. At 1:20 p. m. arrived in Piankatank River and spoke her. She proved to be the schooner *George and William*, of Scott's Creek. We then anchored. At 2 took her in tow and steamed for the Rappahannock.

October 29.—At 12:15 p. m. anchored in Fleets Bay. At 1 Captain Street and Acting Ensign Mather, with Acting Master's Mate Cline, landed with four armed men, in company with a boat's crew from the *Anacostia*. At 5 boat returned with all that left. At 7 sent our boat on shore with captain, Mr. Walker, and six armed men, in company with a boat from the *Anacostia*. At 10:30 boat returned, having captured 3 sacks of salt, 24 yards of woolen cloth, and medicine from Mr. Lee.

October 30.—At 5:30 a. m. went into the mouth of Diamond [Dimer's] Creek. At 9 the captain left the ship with four armed men. At 1 p. m. boat returned with captain, pilot, and one prisoner, named Thomas Harris, private of Fifty-fifth Virginia Regiment.

November 12.—At 8 p. m. saw a light on shore, supposed to be salt works. Captain went on shore with six armed men. At 10:30 p. m. boat's crew fired upon by the enemy. At 11 p. m. boats returned off and fired with 24-pounder howitzer 1 shell and 2 canister. At 11:30 sent two boats on shore with 12 armed men, captain in command. Fired several rounds with musketry and two grape from howitzer. At 12 midnight, boats returned.

March 6, 1864.—Cruising in the Piankatank River from 6 to 8 p. m. At 9:30 saw signalizing outside. Signalizing from shore, apparently from the enemy, from 9:30 to 12 midnight.

March 7.—At 8:15 a. m. steamed up the Piankatank, landed a Mr. Cole at the place from which we took him, joined the flagship *Commodore Read*, and went in search of the tugboat *Titan*, captured by the rebels. At 9:30 commenced shelling the banks as we went along up. At 10:30 flagship signaled us to anchor. At 10:40 came to anchor about 16½ miles up the river. At 10:45 whole fleet anchored. At 1:30 p. m. got underway and steamed down the river, shelling the woods as we went. Ammunition expended: Thirteen shell, 30-pounder rifle; 26 shell, 24-pounder howitzer; 10 shell, 12-pounder rifle.

March 8.—At 9 a. m. sent three armed boats on shore for the purpose of bringing off the furniture of the pilot, Mr. Walker. Ammunition expended: Three 3-second shell for 24-pounder rifle, and two 3-second shell for 12-pounder howitzer.

March 22.—At 9 a. m. arrived at Piney Point. Dismounted the four 24-pounder howitzers to clean carriages.

April 21.—At 5:45 p. m. came to anchor, by order of Captain Parker, commanding the fleet, off Corrotoman River with rest of the fleet. At 7 the enemy opened fire on the U. S. S. *Eureka*, which was reconnoitering along shore. At 7:05 proceeded to her assistance and opened fire from all our guns. Fired 14 shell in the woods which covered the enemy. At 7:30 ceased firing and came to anchor, by order of Lieutenant-Commander Eastman, fleet captain.

May 17.—At 5 p. m. fired 4 shells from 12-pounder howitzer and 4. from 20-pounder Parrott into Fort Lowry, but met with no resistance At 7 came to anchor off Fort Lowry.

May 18.—At 7:45 a. m. received on board L. G. Fogg to pilot us by torpedoes. At 9:30 steaming up Rappahannock River; fired two shells from 20-pounder rifle into the woods. From 12 m. to 8 p. m. steaming up the river, firing a shot occasionally in the woods. In firing the 24-pounder howitzer the compressor was broken. At 7 ceased firing, having expended 17 shell and 8 shot. At 9 came to anchor for the night on account of torpedoes ahead.

May 22.—At 4:15 p. m. fired three shots from 12-pounder in the woods along the river; also musketry. At 4:45 ceased firing. At 6:45 arrived and came to anchor just below Fredericksburg.

May 31.—At 2:30 p. m. proceeded down the river with the rest of the fleet, firing occasionally in the woods from broadside. Expended 17 shells. At 4:30 ceased firing; came to anchor. At 5 got underway and proceeded down the river, shelling the woods occasionally. At 7:30 came to anchor.

June 1.—At 4:30 a. m. got underway and steamed down the river, shelling the woods. At 7 opened fire from the broadside and pivot

guns. At 7:45 a. m. ceased firing. At 5:15 p. m. came to anchor in the mouth of the Rappahannock. At 6:15 fired one shot from 12-pounder at boat attempting to land. At 7:15 cruising in the mouth of the Piankatank.

June 19.—At 7:30 a. m. came to anchor off Tappahannock. At 8:45 Acting Master's Mate ——— left the ship with the first cutter to assist in landing troops.

July 3.—From 12 to 4 p. m. lying at anchor in Butler's Hole. At 6:15 Acting Master Street and Acting Master's Mate Cobb, with 10 men, left the vessel and went on board the *Freeborn* to make an expedition on shore. Steamed up the bay and at 11:45 came to anchor in Wicomico.

July 4.—Lying at anchor in Great Wicomico. Land forces arrived. At 4:40 a. m. sent a boat on shore to convey our forces on board. At 6:40 boat went again to bring remainder of our forces on board. At 11 Acting Master's Mate Cobb returned in charge of land forces. Reported that two men left the ranks while waiting the arrival of the boats to convey them on board. Upon discovering their absence a party was sent in search of them, two of whom were cut off by the cavalry. Supposed they were taken prisoners. At 12:15 p. m. a flag of truce was seen on shore. Captain Schulze was sent on shore to communicate; was met by Captain Eubank, C. S. Army, who wished to exchange prisoners; not agreed to.

July 11.—Lying moored just below Bush Creek [River] bridge. At 7:45 p. m. saw our pickets running in; immediately after saw the enemy coming with an engine. Beat to quarters and opened fire on them. At 8:30 ceased firing, the enemy having left. Expended: For 24-pounder, 5 canister, 3 shell; 12-pounder, 13 Hotchkiss, 6 Dahlgren shell; 20-pounder, 4 Schenkle and 3 navy time-fuse shell. Captain Street and Acting Second Assistant Engineer J. C. Mockabee went and brought the engine across the bridge and Mr. Mockabee took her to Perryville.

July 13.—Lying in Bush River below the bridge. At 3 received news that the rebels were in this vicinity; beat to quarters and opened fire on where we supposed them to be. Fired from 12-pounder 3 Schenkle and 3 Dahlgren shell. At 9 steam tug *Triumph* arrived from Port Deposit with troops.

July 27.—Lying at Bush River bridge watching for the approach of the enemy. At 10 a. m. came to our moorings at right angle with the bridge; distance 100 yards; battery covering all approaches. At 3:15 called the first division to quarters and expended 5 Schenkle shell from 12-pounder Dahlgren rifle.

August 4.—Lying at Bush Creek [River] bridge.

August 21.—Steamed for Piankatank River. At 7 a. m. came to anchor at Milford Haven. Saw a flag of truce on shore; sent an armed boat on shore. At 7:30 returned with G. B. Winder, deserter from Twenty-sixth Virginia Regiment.

September 14.—At 6:30 p. m. came to anchor in Fishing Bay [Virginia]. At 7 went ashore for information and was fired into. Expended three shell, one from 12-pounder rifle howitzer, two shrapnel from 24-pounder boat howitzer. At 8:15 got underway and steamed for Milford Haven. At 9 arrived and spoke a canoe; received some important news. Steamed down and out into the bay. Steamed into Piankatank River.

September 17.—At 7:50 a. m. came to anchor on Sturgeon Bar. Captain Street went on shore with an armed crew. At 7:15 p. m. came to anchor in Jackson Creek. At 7:30 sent an armed boat ashore to see

what information we could get about some torpedoes that had been laid. At 10 p. m. boats returned from shore; got underway to cruise off the mouth of the river.

September 24.—From 8 to 12 m., lying at anchor in Fishing Bay. At 10:20 saw a suspicious boat in Milford Haven, fired two shots with 12-pounder howitzer; she proved to be a fishing boat with 3 men and 1 boy. At 11 sent first cutter alongside U. S. S. *Mercury;* officers and crew well armed. Captain Street proceeded in his gig on board the *Mercury*, in company with the captain and crew of the *Freeborn*. At 11:30 the *Mercury* weighed anchor and proceeded into Milford Haven through Stutt's Creek on a reconnoitering expedition, under the command of Captain Street, senior officer First Division. At 6:30 p. m. the *Mercury* returned. At 8:40 Captain Street returned.

October 20.—At 8:45 a. m. steamed up the Rappahannock. At 12 m. picked up a canoe found in the river bound up the Rappahannock.

Abstract log of the U. S. S. Heliotrope, April 24, 1864, to June 12, 1865.

March 10, 1865.—Went alongside the wharf at Point Lookout. At 8:12 p. m. lying at anchor at St. Inigoes.

March 16.—At 5:15 a. m. weighed anchor and proceeded into Mattox Creek and landed 50 men in boats. Expedition returned on board. At 11:30 opened battery on woods, shelling at intervals.

March 17.—Sent 10 men on shore with the raiding party.

March 18.—At 5:30 a. m. the landing party was called on board. From 12 to 4 p. m., all hands employed getting the *Stepping Stones* afloat. At 1:30 discovered the enemy on farm about 2 miles off; opened our battery on them.

March 19.—From 8 to meridian. The enemy appeared in small squads; fired upon them with 30-pounder Parrott, expending a few shell.

April 3.—At 2:10 p. m. flagship *Don* received telegraphic message of the capture of Richmond. Fired a salute in honor of the victories.

April 6.—At 12:30 p. m. entered Indian Creek and proceeded up to the head in company with the *Commodore Read*, *Freeborn*, and *Cœur de Lion*, and opened batteries, shelling woods. At 2:30 entered and steamed up Diamond [Dimer's] Creek; found there the *Harriet De Ford*, which we captured and destroyed.

April 14.—Came to anchor in Diamond [Dimer's] Creek at 8:15 a. m., in company with the *Stepping Stones*. Sent boat on shore with thirty men. Got underway and steamed down the river, having taken from the wreck of the steamer *Harriet De Ford* one anchor and 30 fathoms of chain. At 9:30 p. m. entered Corrotoman River. At 10:30 disembarked thirty men in charge of Acting Ensign C. B. Pyne to join others from the *Stepping Stones* and *Commodore Read* on an expedition.

April 21.—At 6:30 a. m. got underway and steamed for Muddy Creek. At 7 came to anchor, landed thirty-seven men in charge of Acting Ensigns Pyne and Dyson and marched 10 miles into the country. At 10:45 landed five men in charge of Mate L. C. Cowan. Party came on board at 3:15 p. m. Raiding party came on board at 5:30 with baggage of J. Sampson. At 6:30 steamed out of the creek and up the Potomac River.

April 23.—Steamed to the mouth of the Wicomico River and came to anchor. At 9 a. m. steamed up river, sent boat on small island, and captured two men lying in the brush and brought them on board.

Abstract log of the U. S. S. Jacob Bell, March 8, 1863, to May 13, 1865.

March 8, 1863.—At navy yard, Washington, D. C.

June 1.—At 4:45 p. m. got underway and stood up the [Rappahannock] River. At 6:30 came to anchor off Carter's wharf to cover the landing of troops. From 8 to midnight employed in transporting troops across the river and landing at Carter's wharf.

June 2.—From 8 a. m. to meridian. Steamer *Ella* arrived and gave us orders to convoy the army steamers down the river. At 1 p. m. got underway and stood down the river, in company with army transports. At 4 came to at mouth of river. Found steamers *Anacostia*, *Cœur de Lion*, and *Satellite* at anchor. Proceeded on, accompanied by *Satellite*, up the bay and came to anchor at Dividing Creek.

July 8.—At 5 p. m. arrived in mouth of the Rappahannock River.

July 12.—At 9 a. m. arrived at Union wharf. Sent 25 men and 1 officer on shore. At 11:30 sent Mr. Schulze on shore to command the expedition. From meridian to 4 p. m. received information from a negro concerning contraband goods. Sent gig's crew in charge of Paymaster Anderson for same goods. At 3:30 p. m. paymaster returned with 13½ barrels soda, 4 barrels whisky, and 4 barrels alcohol. Expedition proved successful. At 7:30 p. m. Mr. Schulze and seven men returned, leaving eighteen men on shore to stand guard on goods.

July 18.—At 1:15 p. m. stood down the river. Spoke the transport *George Peabody* aground off Mathias Point. The rebels had been firing into her. Sent boats ashore to reconnoiter in charge of Acting Ensign Benjamin Walker. From 4 to 8 p. m. Standing in to cover landing of boats. Went aground in 8 feet water. *Resolute* took a line and got us off. Boats returned at 6 p. m. Got underway and took a hawser from *George Peabody*. After trying some time parted our hawser. Came to anchor and lay by her all night.

July 19.—At 6 a. m. got underway and went alongside the *George Peabody*; took a hawser, in company with the *Resolute*, to tow her off. At 7:30 let go and gave it up.

July 21.—U. S. transport *George Peabody* floated at 7 a. m.

July 27.—Arrived at Washington navy yard.

August 23.—At 12:50 p. m. cast off from the *Freeborn*; stood over and anchored off Mathias Point. At 9:25 p. m. a colored man came on board with the information that a schooner had run into Rose [Rosier's?] Creek. At 9:40 got underway, stood down the river, and captured the schooner *Gold Leaf*, of Washington, D. C., Captain Sebastian, and four men, deserters from the rebel Army. Made her fast astern.

August 24.—At 9 a. m. sent two boats' crews, in charge of Mr. Walker, on shore to see if there were any blockade runners up Amttix [Mattox?] Creek. At 12:30 p. m. officers and men returned from expedition up Amttix [Mattox?] Creek, having captured one boat, which was destroyed. At 12:45 stood up the river and came to anchor off Maryland Point. Sent on shore four rebel deserters and turned them over to Provost-Marshal Chase. From 6 to 8 p. m. Sent cutter and four men to bring prize schooner close to this vessel.

January 12, 1864.—At 8 a. m. went alongside the pier [Point Lookout], received 50 soldiers, General Marston and staff; stood across the river and into the Yeocomico. At 11:20 made fast to Kinsale wharf and landed troops, etc.

January 15.—At 8:30 a. m. got aground. At 12:30 p. m. U. S. S. *Yankee* succeeded in hauling us off. Ran alongside schooner and received 100 soldiers on board, General Marston and staff. At 1 stood

up the bay. At 5:15 went alongside the wharf at Point Lookout; landed troops, etc.

January 26.—At 6:30 p. m. arrived off Point Lookout. At 7:40 army tug hailed and reported prisoners escaping in transport steamer. Slipped cable and started for her, army tug ahead of us. Fired four rifled shot at her to try to bring her (transport) to, but it being so dark could not tell how the shot struck.

February 6.—Drifting for blockade runners. At 5 a. m. anchored off mouth of Machodoc Creek. At 8:30 a. m. sent cutter and gig armed to destroy all boats capable of crossing the river. At 10:30 returned, having destroyed one large boat (dangerous to the flotilla), capable of containing 40 persons; captured one large canoe, which had evidently run the blockade lately. Got underway and stood down the river.

February 22.—St. Mary's River. At 6:30 p. m. contrabands came on board and gave information concerning a boat loaded with goods bound for Virginia. Sent gig in charge of an officer in search of her. At 9:30 boat returned, having captured a boat attempting to run the blockade, with one man, G. W. Garnett, the others having made their escape.

February 23.—At 8:20 a. m. sent prisoner, G. W. Garnett, on board the schooner *William Bacon*. Got underway and stood down the river.

March 7.—At 8:20 a. m. fleet got underway and stood up the river. At 9:30 called all hands to quarters and commenced shelling the woods on both sides; arrived near the head of the [Piankatank] River; sent gig in company with other boats to destroy the captured steamer *Titan*. At 2 p. m. boats returned. At 2:15 the fleet got underway and proceeded down the river, firing at intervals. At 4 came to anchor above the mouth of the Piankatank River.

May 12.—At 6:35 p. m. proceeded below Cherry Point; communicated with the *Yankee*, which had arrived from the Rappahannock. We then stood up [Piankatank] River. The *Yankee* grounded on Stove Point. We ran a line to her, but were unable to pull her off. Captain Hooker came on board of us and we proceeded to Fishing Bay with a launch in tow. At 10:20 p. m. received three persons on board and placed them under guard. Launch boat's crew and three officers came on board to quarter for the night.

May 13.—At 6 a. m. *Yankee*, *Currituck*, *Fuchsia*, and transport *Star* arrived and anchored. Boats employed embarking troops. Captain Hooker transferred his flag to the *Yankee*. At 11:30 all the fleet underway; proceeded out the Piankatank and anchored at 11:45. *Anacostia* came in and anchored.

May 14.—At 5:30 a. m. sent all boats to assist in embarking troops. At 2:30 p. m. fleet got underway and proceeded to the Rappahannock. At 4:30 came to anchor in Lawson's Bay, in company with the *Yankee* and *Anacostia*.

May 15.—At 10 a. m. all the fleet proceeded down the river. From 8 p. m. to midnight. Sent a captured boat to the *Dragon;* got underway at 9:30; arrived off Piankatank and cruised the remainder of the watch.

May 16.—At 4:30 a. m. stood over to the Rappahannock; came to anchor in Butler's Hole. At 7:50, in company with the *Currituck* and *Fuchsia*, stood up the river. At 10 arrived off Carter's Creek. Sent boats ashore to search for torpedoes, without success. At 10:45 boats returned from shore, cast off, and stood across the river. At 11:30 again sent boat in search of torpedoes; returned at 12:30. Proceeded up the river. At 5 p. m. came to off Carter's wharf. *Yankee* and *Currituck* sent armed boats ashore.

May 17.—At 2 a. m. the boats returned from shore with a quantity of bacon. At 10:30, first division to quarters, opened fire on a number of rebels on shore; distance about 700 yard. Meridian to 4 p. m. Lying astern of the *Currituck* waiting for high water. The *Fuchsia* and *Yankee* proceeded up the river. We sent two armed boats ashore to get information about torpedoes. At 5 boats returned. At 9:45 proceeded up the river with the *Currituck*. At 10:30 she anchored above Circus Point. Found the *Yankee* and *Fuchsia* lying at anchor.

May 18.—At 5:50 a. m. stood down river; spoke the *Dragon*; stood down river again to the fleet. At 9 sent armed boats ashore above Fort Lowry; returned, and we proceeded up the river. At 7:15 came to below Port Tobacco [Tobago] Bay.

May 19.—At 4:30 a. m. the fleet got underway and stood up the river, except the *Currituck*, which proceeded down. One boat from each vessel was sent ahead to dredge for torpedoes. Dredged to within a short distance of Port Royal; then returned on board. At 4:45 p. m. made fast to the wharf at Fredericksburg.

May 30.—At 5 p. m. came to anchor off Port Royal. At 7:15 proceeded down a short distance; sent a boat ashore and burned a small schooner.

June 12.—At 1:50 p. m. passed Tappahannock. At 2:45 fired a 32-pounder 15-second shell to bring to a small sloop.

June 13.—At 4:30 p. m. discovered our cavalry ashore. Sent a boat and brought off the colonel. At 5 sent a boat into creek to procure a ferryboat. At 6:30 came to anchor off Rappahannock Creek.

June 15.—From 6 to 8 p. m. sent 40 rations on shore for the use of the naval portion of the expedition. At 8:30 sent an armed crew on shore on duty.

June 16.—At 9:40 a. m. passed Carter's wharf. The *Commodore Read* hove in sight with three transports in company. At 11:30 came to anchor off Union wharf.

June 20.—At 9:20 a. m. got underway and proceeded down the river, in company with the fleet. At 11:40 off Union wharf; flagship signalized stop, and then she commenced firing. Standing down the Rappahannock. At 12:40 p. m. the *Commodore Read* opened fire on Union wharf. At 3:20 went alongside steamer *State of Georgia* and sent the horses and troops on board.

June 22.—At 10 p. m. came to anchor off Sturgeon Creek; sent boat expedition on shore. At 11:45 boats returned. Stood over to the *Commodore Read;* received a mail; stood over to the Piankatank River; came to anchor off Jackson Creek.

June 23.—Off Jackson Creek, watching for signals from shore. From 4 to 8 a. m. embarking men from shore. Brought off six prisoners. Got underway at 6:30; proceeded out of the river; went alongside of the *Commodore Read;* delivered one horse and six prisoners.

July 13.—At 2:20 p. m. made fast to the guard ship at St. Inigoes; took on board a 30-pounder Parrott gun.

July 14.—At 2:30 p. m. arrived off the mouth of the Patapsco River, boarded a schooner, and took the captain, Edward Wheatley. Also took a small schooner in tow and brought the captain, J. A. Jones, on board for pilot. At 4:50 ran aground; made every effort to get off without success.

July 15.—At 1:10 a. m. floated off. At 9:30 came to anchor below Gunpowder [River] bridge.

October 6.—At anchor in the Piankatank River. At 5 a. m. got underway and drifted outside the river; captured boat containing two

men. At 7 got underway; proceeded to the Rappahannock; came to anchor off Sturgeon Bar. Put the two men captured in close confinement, they not being able to give a satisfactory account of themselves.

October 7.—At 4:30 p. m. came to anchor off Point Lookout; delivered two prisoners and two refugees.

November 15.—At 1:45 p. m. sent a flag of truce ashore; brought off a female refugee named Mrs. Sterrett.

November 18.—At 3 p. m. went to Boyd's Hole; sent a boat ashore to search for a hidden canoe. At 5:15 boat returned from shore with a small scow.

November 27.—At 2:30 p. m. came to anchor above Carter's wharf, sent two armed boats' crews ashore. At 4:30 boats returned and we proceeded down the river. Expended one charge of powder and one shell for 30-pounder rifle. At 8 arrived at Corrotoman Bay; sent armed boat's crew ashore. At 9 p. m. sent first and second cutters and dingey ashore with armed crews; brought off 15 contraband refugees. Stood down the creek.

November 28.—At 1:35 a. m. two shots were fired at us from the shore. Called all hands to quarters and discharged 30-pounder rifle. Arrived in Butler's Hole. At 9 came to anchor; sent refugees on board the *Anacostia*, except two men.

November 30.—Ship lying at anchor off Union wharf, Rappahannock River. At 9 p. m. rebels burning signals, white and red, on southern side of river.

December 1.—At 6:30 a. m. stood over to the south side of the river. Sent two armed boats' crews ashore. Lying off Union wharf, Rappahannock River. Brought off from shore ten flat-bottom boats.

April 6, 1865.—Cruising off Broad Creek. At 5 picked up two colored men in a canoe, they having made their escape from the captured steamer *Harriet De Ford.*

April 15.—At 10:50 a. m. communicated with the *Ella* and received the mail, also news of the death of the President of the United States. At 4:30 p. m. got underway and stood down the river. Off Nanjemoy we met the tug *Neptune* with dispatches for us. From 8 to midnight, cruising between Maryland and Sandy points.

April 16.—Boarded and searched several schooners; found all correct. Cruising up and down the river. At 7 p. m. sent a boat with six armed men, in charge of Acting Ensign A. Lewis, to cruise along the shore. At 11 returned with two prisoners.

April 17.—At 6 a. m. communicated with the *Don*, and transferred the prisoners to her. At 7:30 sent the first cutter on shore with an armed crew in charge of Acting Ensign Lewis and took a woman prisoner by the name of Mrs. F. B. Dade, by order of commander. At 11:45 a. m. put the captured lady on board the *Ella* for passage to Washington.

May 13.—Ship put out of commission, navy yard, Washington, D. C.

Abstract log of the U. S. S. Juniper, July 11, 1864, to May 26, 1865.

July 11, 1864.—Ship went in commission.

July 17.—At 1 a. m. hauled alongside the wharf (navy yard, Washington).

August 2.—At 4:45 a. m. hove up anchor and accompanied two Government transports to Virginia side to guard them while removing some Government bridges. At 6 a. m. anchored off Aquia Creek.

September 2.—At 7 p. m. communicated with the *Sophronia* and cruised off Yeocomico. At 9 captured a small boat with four refugees trying to make their escape into Maryland.

October 16.—At 2 p. m. anchored off Nanjemoy. At 7 saw a rocket from Virginia side and fired two shots in that direction, one from 20-pounder Parrott and one from 12-pounder boat howitzer.

October 18.—At 6:30 p. m. sent a boat in search of blockade runners. At 8 boat returned with prize getting ready to run the blockade, containing three men and no goods.

October 23.—At 11 a. m. captured two refugees.

October 24.—From 12 to 4 p. m. Received on board two men as prisoners for running the blockade.

March 8, 1865.—From 4 to 8 a. m. cruising off Wicomico River. At 9 fired one 10-second and three 5-second shell from 20-pounder Parrott and three Schenkle shells from 12-pounder; shelling the woods on Virginia shore at Mathias Point.

March 13.—At 9:30 a. m. came to anchor off Ludlow's Ferry [Md.]. The *Teaser* came alongside. At 10 sent two boats ashore to search for blockade runners. Destroyed a large scow which we found in Pope's Creek, which [it] was impossible to bring to the beach.

Abstract log of the U. S. S. Morse, December 21, 1864, to June 10, 1865.

March 13, 1865.—At 12:45 a. m. passed Fort Lowry. At 1:40 abreast of Tappahannock; turned and stood down the river. At 5:40 about 2 miles below Fort Lowry a battery of two guns, one a Whitworth, opened on this vessel from the south side of the river. Immediately beat to quarters and returned the fire, the army tug *Mosswood* also firing her battery. At 7 the battery on shore ceased firing. This ship continued shelling the woods all around in the vicinity of the battery. At 8:20 the *Commodore Read* came down the river and communicated. At 9:15 commenced shelling the woods in the vicinity of the battery. At 10:35 went above Fort Lowry to meet the *Delaware*. Ammunition expended: 100-pounder Parrott percussion shell, 16; 100-pounder Parrott 5-second 3, 10-second 4=7 shell; IX-inch Dahlgren 5-second shell 4, IX-inch Dahlgren 10-second 7, 15-second 7, concentric 10=28; IX-inch Dahlgren shrapnel, 3; howitzer shrapnel, 2; canister, 1. At 2:20 p. m. the *Delaware* went down the river, we lying off Tappahannock. At 3:20 we came down the river as far as Fort Lowry, met the *Delaware* coming up; were ordered to follow her. At 4:30 commenced shelling the woods below Tappahannock in company with the *Delaware*. At 5:15 ceased firing and stood down the river. At 6:30 grounded on Bowlers Rocks. Sent up two rockets, fired 24-pounder howitzer. At 7 p. m. got afloat, communicated with the *Delaware*. At 7:15 anchored off Union Bluff. Ammunition expended: 100-pounder Parrott percussion shell, 13; 100-pounder Parrott 5-second shell, 1; 100-pounder Parrott 10-second shrapnel, 1; IX-inch Dahlgren 5-second shell, 2; IX-inch Dahlgren 10-second, 12; IX-inch Dahlgren 15-second shell, 4; concentric 10-second shell, 3; grape, 1; howitzer shrapnel, 1.

March 15.—At 11 a. m. sent an armed boat with three officers on shore. The schooner *E. J. Petty* came in and anchored. The officers received information on shore that 150 marines of the Confederate Navy were in Mitchell's [Meacham's] Creek with three large boats, intending to destroy the oyster schooners; also two of their men had been dressed in the United States uniform, were acting as scouts.

Abstract log of the U. S. S. Primrose, February 26, 1863, to April 19, 1865.

February 26, 1863.—Vessel put in commission, navy yard, Washington.

March 8.—Left the navy yard to join the Potomac Flotilla.

March 15.—At 8:30 a. m. stood down the river in chase of a boat crossing the river. Fired 30-pounder rifle and brought her alongside. She proved to contain two refugees, a man and his wife, with a few articles of furniture, escaping from Machodoc to Lower Cedar Point. Took them on board and stood up the river to Passpahanza [Passpatansy] Creek [Virginia], and came to anchor. At 10:50 got underway and stood up the river, with an army captain and four soldiers on board, taking them from Ludlow's Ferry to Pope's Creek to search the place for a suspicious party there. Finding nothing against the two refugees, took them down as far as our station and let them go.

March 17.—At 10:20 a. m. stood down the river to White Point to land Mr. Watson, by order of Lieutenant-Commander Magaw. At Mathias Point delayed forty minutes to send the cutter ashore to overhaul boat on the beach. Found her old; would not float; destroyed her, then proceeded down the Virginia shore to the above point. Arrived and anchored off White Point at 1:15 p. m. Landed Mr. Watson under the escort of two armed boats' crews, as rebel cavalry were seen around. Fired two shots from 30-pounder rifle to cover landing and keep the rebels back. Left there at 3, with Mr. Watson on board, for Nanjemoy Stores.

March 23.—Left Wicomico River at 1:05 p. m. and proceeded over to Pope's Creek, Virginia, where we anchored at 2:15. Armed boats landed on an expedition into Virginia. At 4:50 boats returned, having expended 56 rounds of Spencer rifle cartridges.

March 24.—Came to anchor off Pope's Creek with the *Teaser* at 8:10 a. m. and sent armed boats ashore on an expedition. At 2:55 p. m. came to anchor off Nomini Cliffs, in company with the *Teaser*, and sent armed boats ashore, having seen boats on the beach. Armed boats returned at 4:10, having captured three boats at Nomini Cliffs.

March 27.—Came to anchor off Bluff Point, Va., in company with the *Teaser*, at 12:30 p. m. Sent two armed boats ashore. Boats returned at 5:30, having expended 75 Spencer rifle cartridges. Stood down the river. Anchored off Cobb's Point.

March 28.—Cruising slowly down the Virginia shore. Sent armed boats ashore at Bluff Point and at White Point.

March 29.—At 2:45 a. m. armed boats returned, having gained important information relative to the smuggling of goods into Virginia, and names of the parties engaged in the traffic. At 8:10 p. m. arrived off the mouth of Maddox [Mattox] Creek.

March 30.—At 7 p. m. cruised along shore and returned and anchored at White Point. At 7:55 went ashore again on account of information received while on shore first time.

March 31.—From 12 to 4 a. m. boats returned, having arrested Mr. Curley, of Monroe's Creek, Virginia, for aiding in running the blockade. Placed him on board the *Teaser*. At 9:30 stood up toward Mr. James Sutton's and anchored. At 10:10 sent armed boat's crew on shore and arrested Mr. Sutton, bringing him on board.

April 14.—Overhauled a small boat with refugees from Richmond, Va. Found them all right and let them go over to Maryland. At 8:50 a. m. proceeded over to Coan River, and at 10:40 sent armed boats ashore under flag of truce, in charge of Acting Master Street, by order of Lieutenant-Commander E. P. McCrea, for the purpose of visiting Dr. Smith.

[NOTE.—From April 16 to May 1, 1863, the *Primrose* was serving in the North Atlantic Blockading Squadron.—COMPILERS.]

May 2.—In company with the *Yankee* arrived off the mouth of the Rappahannock at 2 p. m.

May 4.—At 2 p. m. gave chase to a schooner-rigged boat that was running along the shore on the south side of the river. She ran up a creek and escaped; we could not keep up steam. At 5:05 came to anchor off Windmill Point.

May 8.—Up anchor at 4 a. m. and cruised along the south shore of the Rappahannock River; stood over to Carter's Creek and examined all its branches. From 12 to 4 p. m., left for Corrotoman River, took a negro for pilot, and from him learned that a schooner had passed up the river the day before. We went up as far as we could and then sent boats up. When our boats came in sight of the schooner her crew left in a boat. On boarding her we found her empty, but found some packages of gold lace. The name of the schooner was scratched out. Brought her alongside and stood for Windmill Point. Anchored at 8:40 p. m.

May 12.—At 7 a. m. sent armed boats up Carter's Creek to find contraband goods. From 8 a. m. to 12 meridian: Armed boats returned, capturing a small quantity of bacon, which was for the rebel Government. From 12 to 4 p. m.: Arrived at Urbana and sent armed boats ashore from the *Primrose*, *Currituck*, and *Satellite*. Captured a lot of goods (whisky, coffee, molasses, etc.).

May 13.—At 9:30 a. m. sent an armed boat up the creek in charge of Acting Master Street, in company with boats from the *Satellite*, *Currituck*, and *Anacostia*, capturing a quantity of bacon, etc. At 1:30 p. m. took the boats in tow and stood down the river about 2 miles, where we came to anchor and sent boat ashore. From 6 to 8 p. m. boat brought on board a lot of whisky.

May 14.—From 8 a. m. to 12 m.: Boats from the *Currituck*, *Anacostia*, and *Satellite* brought down a schooner that they had captured at Urbana Creek.

May 29.—Left the Rappahannock for Tabb's [Tapp's] Creek at 9 a. m. Came to anchor at 11. Sent boat ashore in charge of Captain Street. From 12 to 4 p. m. boats returned, having seen the sloop *Flying Cloud*, of Baltimore, lying sunk up the creek, having been sunk about two weeks after landing her cargo of contraband goods. Sent a boat and got her sails and rigging.

May 30.—At 3:15 a. m. up anchor for Tappahannock in company with the *Currituck*, *Anacostia*, and *Satellite*. Chased a sloop and fired 4 shots at her from 30-pounder rifle. At 9 came to anchor off Tappahannock. Boats went ashore in charge of Captain Street, also boats from the other vessels. Were attacked on landing by cavalry, who retired to the woods. Found some grain, etc., belonging to the rebel Government. Fired 3 shots from the 30-pounder rifle and 4 from 24-pounder howitzer to clear the woods of rebels. From 12 to 4 p. m.: Boats from the fleet went ashore and destroyed 20,000 bushels of grain belonging to the rebel Government. Boats returned at 3 and we proceeded down the river at 3:15.

June 1.—At 12 a. m. sent a boat ashore, also one from the *Currituck* in company, for the purpose of arresting contraband goods traders. From 4 to 8 a. m.: Boats returned, having captured four contraband goods traders; also a lot of goods and two rebel flags sewed up in beds; also a large sum of money. The fleet stood up river for Urbana, where a number of our cavalry were waiting for transportation over

to the north side of the Rappahannock. From 8 a. m. to 4 p. m.: Transports arrived and began to take troops on board to take them to the other side. From 8 to 12 midnight: Cast off from the *Currituck* with armed boats from the *Anacostia* and *Freeborn*, and proceeded about 1 mile below Urbana and landed boats to get some contraband goods.

June 2.—From 12 to 4 a. m.: Armed boats returned, having found one crate of crockery ware, one dozen hayforks and spades.

June 3.—Stood for Piankatank River and anchored. At 7 p. m. sent armed boat ashore. Boat returned, having received information that there were four rebel officers ashore. Up anchor and proceeded to the *Crusader* and came to anchor. They sent an armed boat ashore, and one went from us.

June 4.—From 12 to 4 a. m.: Armed boats returned at 12:30 a. m., the rebel officers having escaped. From 8 to 12 m.: Sent armed boat up the creek in company with boats from the *Anacostia* to raise the sloop *Flying Cloud*. From 4 to 6 p. m.: Armed boats returned, having the sloop in tow; found four auger holes in the bottom.

June 10.—Off Blakistone Island. At 10:45 p. m. was hailed from the island. Sent the boat ashore in charge of Acting Master Street and captured seven men crossing from Virginia; found them to be principally refugees; only one held as a prisoner of war.

June 17.—Came to anchor off Stafford Mills at 12:30 p. m.; sent an armed boat ashore on an expedition into Virginia. Boat returned at 5:50, bringing two prisoners captured for running the blockade.

June 18.—Sent armed boat ashore at Stafford Mills, Va., and released one of the men taken as prisoner June 17.

June 20.—From 12 to 4 p. m.: Boarded the sloop *Richard Vaux*, she not having a pass for the Potomac River, and her papers not correct, was seized as a prize.

July 11.—At 10:30 a. m. sent armed boat's crew of eight men ashore in charge of Acting Master's Mate Stewart, and through information gained while on shore of a gang of blockade runners pursued and took one named Captain Harris, alias Payne, and returned to the vessel at 11:30. At 12:30 p. m. sent an armed boat's crew of nine men on shore, having obtained information that two others of the blockade runners were there. Obtained more valuable information and returned at 3:30.

July 17.—From 8 p. m. to 12 midnight: Sent armed boat ashore in company with the *Cœur de Lion*. At 11:50 boats returned with a lot of contraband goods captured in Cockle Creek [Cuckold Creek?].

July 20.—At 9:30 p. m. stood out to the guard ship and proceeded up the river as convoy to the transport steamer *Detroit*, she having deserters on board in a state of mutiny.

July 21.—Left the *Detroit* off Aquia Creek and returned down the river.

July 23.—At 10:30 a. m. sent armed boat ashore. Proceeded up the river. Armed boats returned at 12:30 p. m., having obtained information that some goods had been landed at Nomini Cliffs. Sent an armed boat with ten men on shore. At 6:10 armed boats returned, bringing a rebel picket's horse, captured 6 miles from the Rappahannock River; the rebel made his escape. Also visited Mr. Washington Baine's house, having been informed that he had crossed from Maryland last night with goods for Richmond. Took on board a lady refugee and children and landed them at Blakistone Island.

July 27.—At 4:30 p. m. proceeded up the Wicomico River, where we arrived and anchored at 5 p. m. At 7:15 two armed boats went ashore.

July 28.—Armed boats returned at 2:50 a. m., bringing on board the following prisoners: Zacariah Posey, Perry Davis, and Washington Goodrich, who were captured by our boats, in company with the detective force from Washington.

August 2.—At 8:40 p. m. armed boat went ashore.

August 3.—Lying at anchor off Nomini Creek. Boats returned at 4:25 a. m.; captured two boats with some salt.

September 4.—At 8:30 a. m. arrived off Mathias Point; discovered a flag of truce on shore. Sent a boat ashore and brought off two deserters from the rebel Navy, who took the oath of allegiance.

April 29, 1864.—At 12:30 p. m. the *Commodore Read* signalized to open fire, which we did, expending one 30-pounder percussion shell, one solid shot, and three 24-pounder shrapnel. At 12:45 ceased firing and came to anchor off Mathias Point. At 1:15 the *Commodore Read* signalized to send armed boats on board. At 1:25 boat with ten men and an officer left the ship for her. At 6, boat returned, and at 6:30 got underway and steamed down the river.

May 2.—At 4:20 p. m. proceeded, in company with the *Teaser*, down river. At 5, in obedience to orders, opened fire on Mathias Point. At 6 received orders to cease firing. Expended fifteen 30-pounder percussion shell, fifteen 3¼-pound charges for same, and 22 shrapnel and 2 shell for 24-pounder Dahlgren howitzer.

May 6.—At 1 p. m. communicated with the guard ship off Alexandria and received from her 6 boxes of ammunition. At 7:15 picked up a boat containing one man who gave his name as Frank Arthur, a midshipman of the C. S. Navy. Found nothing upon him but official papers from the rebel Navy Department.

May 18.—At 11 a. m. proceeded to Maryland Point. Spoke two sloops, the *T. Berry* and *Anna Maria*, and learned from them that they were driven from Nanjemoy Creek by a party of armed citizens.

May 26.—At 8:30 a. m. got underway and drove off four schooners from near the telegraph cable. Came to anchor at Boyd's Hole. At 4:30 p. m. the steamer *Arago* came within hail and asked assistance to land troops; sent gig and cutter and four men for that duty; boats returned at 6:20.

June 1.—At 4:30 p. m. chased a boat containing three men, coming from the Virginia shore. Sent gig ashore with three armed men, who caught them after a chase through the woods. They gave their names and stated that they were deserters from the rebel Army. Searched them; found nothing suspicious.

June 6.—At 9:15, off Aquia Creek, picked up five Union soldiers (escaped prisoners) and two rebel soldiers (deserters) on a raft trying to cross the river.

June 18.—At 9:30 p. m. saw a fire in the direction of Aquia Creek; got underway and steamed up the river. At 9:45 opened fire on the hills and woods back of Aquia Creek, but with what effect could not be ascertained. At 11:15 ceased firing and steamed down the river.

June 19.—At 12:30 a. m. ran in under the land and opened fire on the Virginia shore in the direction of the telegraph station. At 1 ceased firing and steamed up to Maryland Point and came to anchor at 1:15. Ammunition expended during the shelling of the past thirty-six hours: Parrott 30-pounder rifle, 28 percussion shell; Parrott 30-pounder rifle, twenty-eight 3¼-pound charges; 24-pounder howitzer, 9 shell, 4 canister, 15 shrapnel, fixed ammunition.

July 11.—Steamed across the river into Boyd's Hole. At 6:30 p. m. proceeded up the river. At 7:30 beat to quarters for action, firing

occasionally into the woods on the Virginia shore in the neighborhood of the rebel batteries. Ceased firing, having fired nine shell, four 24-pounder, and five 30-pounder. At 12 arrived and came to anchor off the navy yard, Washington.

September 2.—At 5:20 p. m. spoke the guard ship off St. George's Island. Stood up the river. At 11:30 p. m. captured a boat attempting to run across to the Virginia shore with goods and four men.

September 28.—At 7:40 p. m. fired two shrapnel from the forward gun into the Virginia shore at a light ashore.

October 18.—Captured a boat containing three colored men bound from Maryland to Virginia.

December 14.—At 9:30 p. m. captured a boat containing two blockade runners. Set the boat adrift and ran her down.

February 21, 1865.—At 7:30 a. m. discovered two boats on the Virginia shore. Fired one 15-second shrapnel and two percussion shell from 20-pounder rifle at them. Sent cutter with armed crew in pursuit. At 8:15 the cutter returned with both boats containing 18 refugees, 10 black and 8 white, and 1 blockade runner.

February 22.—At 10 a. m. a small boat came alongside from the Virginia shore containing three deserters from the rebel Army, who gave themselves up.

February 23.—Cruising. At 7:30 a. m. captured a small bateau containining four colored refugees while attempting to cross the Potomac from Virginia.

Abstract log of the U. S. S. Satellite, December 16, 1861, to September 15, 1862.

December 16, 1861.—At 3:15 p. m. weighed anchor and proceeded down nearly opposite Maryland Point with the U. S. S. *Freeborn*, and fired two shells on shore and returned to anchor at Liverpool Point.

December 22.—At 12:30 p. m. saw firing from the rebels at Boyd's Hole; weighed anchor and proceeded down the Maryland shore; saw a schooner off the point disabled by the rebels; proceeded to render aid, when the rebels opened fired upon us, hitting the wheelhouse twice; then returned the fire, firing seven shells.

January 7, 1862.—At 12:30 p. m. steamer *Island Belle* came with an order for us to weigh anchor and follow her, which was done immediately, and went to Fox's place on the Virginia shore, where we found the steamer *Freeborn*, and commenced firing, and fired three shells from each gun.

January 8.—At 5 a. m. proceeded down to the Virginia side opposite Smith's Point, and commenced throwing shell on shore, throwing 13 from the forward gun and 16 from the after gun, without any answer from shore.

January 11.—At 4:30 p. m. proceeded across the river from Liverpool Point, and threw three shells from each gun on shore.

February 15.—This day the U. S. S. *Harriet Lane* came down past the batteries, accompanied by the *Jacob Bell* and *Baltimore*. The rebels opened a hot fire, one shell passing through the *Harriet Lane's* port paddle box, disabling her. At 10:30 a. m. went to her assistance.

March 4.—At 10:30 a. m. proceeded across the river and fired one shell from the Parrott gun. At 2 p. m. proceeded across the river with the steamer *Island Belle*, and fired three shells from the Parrott gun and one from the 8-inch gun.

March 5.—At 1 a. m. proceeded across to Aquia Creek; fired two shells from the Parrott gun; proceeded up the river, and came to off Wade's Bay. At 3 a. m. proceeded across the river and fired fourteen 10-second shells from the IX-inch gun, and six sand-filled shells from the Parrott gun, then proceeded to Wade's Bay and came to anchor. At 10 a. m. proceeded across to Aquia Creek with the U. S. S. *Island Belle*, and fired two sand-filled shells from the Parrott gun, the rebels returning the fire, but doing no damage.

March 8.—At 5 p. m. ran across to Boyd's Hole, and fired four shots from the Parrott gun and two shots from the 8-inch gun.

March 9.—Saw the woods and buildings on fire on the rebel batteries.

March 10.—From meridian until 6 p. m. employed in getting off shot and shell from the rebel battery at Cockpit Point.

March 13.—At 10 a. m. ran across to Potomac Creek, and fired three 15-second and one 10-second shell from the 8-inch gun and one 7-second and four shots from the Parrott gun into a rebel camp, they returning one shot. At 10 p. m. anchored below Taylor's Landing.

March 14.—At 5:30 a. m. saw some pickets around an old barn; then fired seven 5-second shell from the 8-inch gun and three shots from the Parrott gun. At 1 p. m. the U. S. steamers *Yankee* and *Anacostia* passed down and shelled the upland battery at Aquia Creek, they returning the fire, but doing no damage.

March 20.—At 1 a. m. took a launch load of soldiers on board, weighed anchor, and proceeded to Taylor's Landing. The soldiers then proceeded to shore, accompanied by the captain and one master's mate and boat's crew. At 6, the launch and boat coming off, weighed anchor to pick them up. At 7 took them on board, and seeing some pickets on shore, fired three 5-second shell from the 8-inch gun and two shot from the Parrott gun.

March 24.—At 11 p. m. took on board 200 soldiers with a launch in tow and proceeded down the river.

March 25.—At 2:30 a. m. came to anchor near Boyd's Hole and landed the troops. At 6 the troops returned and commenced embarking; at 7, all on board, started up the river, when the rebels fired a volley of musketry at us, not reaching us. We then fired eleven 5-second and one 15-second shell from the 8-inch gun and from the Parrott gun.

April 13.—At 3:30 p. m., the *Jacob Bell* coming down, all commanding officers went on board. At 4:30 formed a line and proceeded down the bay. At 11:10 the fleet came to anchor near the town of Urbana, in the Rappahannock River.

April 14.—At 6 a. m. the *Jacob Bell* sent a boat inshore, but being fired upon by the citizens, did not land, but returned without damage. The fleet then weighed anchor. The *Jacob Bell* opened fire. At 7:20 we fired one 15-second shell from the after gun without any response. At 7:40 proceeded up the river. At 11:15 came to an encampment and opened fire upon it, and fired 3 shots from the forward gun and one 15-second shell from the after gun, and found it evacuated. Then sent boats on shore to destroy the works, and proceeded up the river. At 1:30 p. m. the fleet came to anchor off the town of Tappahannock, they setting a flag of truce. The commodore went on shore, hoisting the Stars and Stripes. At 4:30 proceeded down to ——— with the *Island Belle*. The captains went on shore with two boats each and an officer, and destroyed the remainder of the encampment and searched some houses. At 7:30 all on board, weighed anchor, and proceeded to Tappahannock, where the rest of the fleet was lying.

April 15.—At 6:30 a. m. saw a sloop coming down the river; the *Island Belle* went over to her; the crew anchored her and left her; the *Island Belle* took her as a prize, she being loaded with fish. At 8:30 weighed anchor with the fleet and proceeded down the river. At 11 came to anchor off a creek; the *Island Belle* went up and brought two schooners off. At 1:30 p. m. the fleet weighed anchor and proceeded down the river. At 2:20 came to anchor at a wharf. Commanding officers went on shore, and took away one horse and two soldiers belonging to the rebel Army.

April 16.—At 5:15 a. m. proceeded out of the Rappahannock River, the other vessels following.

April 19.—At 10 a. m. stopped off the town of Tappahannock. At 11 the fleet proceeded up the river. At 3 p. m. took the schooner *Sarah Ann*, of New Berne.

April 20.—At 5 a. m. took the rebel schooners *Sarah Ann* and *Sabine*, of Tappahannock, in tow, and proceeded to Port Royal [Va.]. At 1 p. m. the master of the *Anacostia* came out of a creek below Port Royal with the rebel steamer *Eureka*, of Georgetown, as a prize and the crew as prisoners. At 2, Mr. Hovey, master's mate, came out of the creek with a rebel steamer. The *Eureka* had a small schooner in tow, loaded with whisky and stores.

May 5.—At 8:30 a. m., the *Robert Leslie* came down and towed us to the [Washington] navy yard.

June 9.—Received orders to proceed down to Fortress Monroe. At 6:45 p. m. proceeded down the river.

Abstract log of the U. S. S. Thomas Freeborn, March 22, 1863, to June 17, 1865.

March 22, 1863.—Lying off Nanjemoy Stores, Potomac River.

September 23.—At 5:30 a. m. came to anchor in Butler's Hole. At 6:20 discovered a schooner on fire in the mouth of Old Haven Creek. [Milford Haven Creek]. Got underway and proceeded down the bay; spoke the U. S. bark *Young Rover* and enquired concerning the vessel; they replied that they knew nothing of her. On account of heavy sea were unable to send a boat; could we have done so could not have saved her, as she burned to the water's edge. There were a number of boats near her, apparently taking goods from her. Thinking her a blockade runner, we fired upon them and drove them off. Proceeded up the bay. Expended two 5-second shells; one 10-second shell.

March 6, 1864.—At 12:30 p. m. army steamer *General Brewster* came in; steamed out to meet her. At 3:30 the *Fuchsia* arrived, and reported the capture of two steamers, *G. B. McClellan* and *Titan*, by the rebels.

March 7.—At 8:30 a. m. got underway and proceeded up the [Piankatank] River in company with the *Fuchsia*, *Jacob Bell*, *Currituck*, and *Commodore Read*. After going up about 5 miles, commenced shelling the woods on both sides; received no response from the enemy. At 11:30 discovered the captured steamer *Titan* lying above Haley's farms, on the opposite side, burned to the water's edge. Anchored and sent three boats up to examine her. Ammunition expended: For 68-pounder, eight 15-second, three 10-second, four 5-second; for 32-pounder, two 5-second, one 5-second; shrapnel howitzer, ten Schenkle.

March 14.—At 8:15, while cruising up the river (Piankatank), discovered lights on the northern shore, and found people making salt in pits, which were destroyed.

April 20.—At 11 a. m. proceeded down the [Rappahannock] River, being sent down to Urbana to see if the enemy occupied the place. At 12:30 p. m. arrived off Urbana. At 2 proceeded up the river and anchored off Farnham Creek, in company with the fleet. At 5:30 fleet proceeded down the river.

April 21.—At 9 a. m. got underway with an armed boat from the *Commodore Read* in tow, and proceeded across the river to Parrott's Creek and anchored. *Read's* boat went on shore. Ammunition expended, two 8-inch shell, 10-seconds; one 5-second shell for 32-pounder; one 5-second for howitzer; one Schenkle shell. At 11:15 boats returned from shore. At 5:45 came to anchor off Corrotoman River in company with the fleet. At 6:45 got underway and opened fire on the sharpshooters on the shore. Ammunition expended: One 10-second and three 5-second shell for 68-pounder; one 10-second, three 5-second for 32-pounder; five Schenkle shell for howitzer. From 8 to midnight: Cruising off Hog House Bay, firing a shot every hour.

April 22.—From midnight to 4 a. m.: Still cruising. Ammunition expended from 68-pounder, four stand grape; 32-pounder, four 5-second shell; one Schenkle shell from howitzer. From 8 to meridian: Expended one Schenkle shell from 12-pounder howitzer.

May 31.—At 6 a. m. came to anchor off Port Royal, Va., in company with the fleet. At 3:20 p. m. proceeded down the river in company with the fleet and a number of transports loaded with troops. Ammunition expended: Twelve grape canister, two shell, 5-second, from 68-pounder; ten percussion shell from 30-pounder Parrott; five Schenkle shell; one grape from 12-pounder howitzer. At 9:45 anchored off Carter's wharf.

June 6.—At 4:30 a. m. steamed down the bay. Captured a canoe off Windmill Point with five refugees. Came to anchor off Butler's Hole.

June 18.—At 6 a. m. came to anchor off Layton's wharf. From 8 to meridian: Sent on shore one howitzer, equipments, and ammunition. At 7 p. m. howitzer brought back and put on board. At 8:30 went alongside the wharf and took on board a number of cavalry horses, cavalrymen, etc.; cast off and anchored. Two transports arrived.

June 19.—At 3 a. m. steamed down the river, followed by the *Commodore Read* and four transports. Came to anchor off Tappahannock at 6 a. m. From 8 to midnight assisting Colonel Draper to get his troops off.

June 20.—At anchor off Butler's Hole. At 9:30 p. m. the transport *Georgiana* came alongside and took the troops and horses.

June 30.—At 2:45 p. m. sent two armed boats ashore; destroyed salt works, grain, agricultural implements, etc.

July 3.—At 9 p. m. came to anchor in Dividing Creek. Sent 10 men and 1 officer on an expedition with the *Read's* and *Fuchsia's* men in charge of Acting Master W. T. Street.

July 4.—At 10 p. m. men returned from expedition.

September 21.—At 5:45 a. m. came to anchor off Stingray Point. Sent ashore to remove the family of Mr. James, they having taken the oath of allegiance.

October 20.—At 11 a. m. came to anchor. Sent cutter up the river to drag for torpedoes. At 2 fired two 20-pounder shell from howitzer and stood up the river to Lowry's Point; then went about and stood down river. At 4:30 took off two families from Manaski [Monaskon?] wharf. At 5:20 commenced shelling the country around and then stood down river. At 8:30 came to anchor off Stingray Point.

October 21.—At 9 p. m. fired a 5-second shell from 64-pounder at a light on shore. At 9:30 came to anchor in Jackson Creek [Piankatank River].

October 26.—At 1:45 p. m. fired three 30-pounder shell at some men on shore. At 9 came to anchor off Saunders' wharf and landed 60 men to go on an expedition.

October 27.—From 8 to meridian: Fired one 10-second shell from 64-pounder, two 5-second shell from 30-pounder, and three 5-second from howitzer. Standing down the river.

December 4.—At 10:50 a. m. came to anchor off Mathias Point. Sent a boat ashore under a flag of truce. At 11:10 boat returned with a rebel captain, J. M. Carter, Company I, Forty-fifth Georgia. At 11:15 stood up the river and came to anchor off Nanjemoy Stores. At 7:30 p. m. sent an armed boat on picket duty in Pope's Creek. Saw signals made from Pope's Creek to Mathias Point. At 8 came to anchor. At 9 picket boat returned.

March 3, 1865.—At 9:10 p. m. came to anchor off Cherry Point. At 10:30 Acting Master W. T. Street went on shore with an armed boat's crew to capture some rebel soldiers.

March 4.—At 2:30 a. m. the boat returned; had captured two rebel soldiers. At 6 got underway, picked up a sailboat containing one man, supposed to be a blockade runner. Dressed the ship with flags. At 12 the *Commodore Read* signaled to fire a national salute.

March 6.—At 6:10 a. m. stood into Butler's Hole; came to anchor and received on board two rebel prisoners.

March 7.—At 9:30 a. m. sent a boat ashore and brought off four rebel soldiers.

March 8.—At 6 a. m. stood over to Cherry Point; a boat came alongside containing four rebel deserters, took them on board and stood over to Rappahannock and came to anchor in Butler's Hole.

March 29.—At 12:25 p. m. stood up Yeocomico River. At 2:20 sent a boat ashore to get information. Coming down the river espied a number of rebels on shore and fired two shells at them.

April 6.—At 10 a. m. spoke the *Yankee;* stood into Indian Creek; communicated with the *Commodore Read.* At 11:30 proceeded up the creek in company with the *Cœur de Lion* and *Heliotrope;* commenced shelling the woods. At 12:25 p. m. steamed down Dimer's Creek, shelling the woods on both sides. At 2:30 discovered the steamer *Harriet De Ford* with large force of the enemy engaged in wrecking her. We opened fire on them and landed with three armed boats, hotly engaging the enemy. The enemy having almost destroyed her, we, finding that she could not be gotten off, destroyed her, then returned down the river with the steamers *Commodore Read*, *Cœur de Lion*, and *Heliotrope.* Ammunition expended: Seventeen 8-inch shell, twelve 30-pounder shell, three 12-pounder shell, 173 pounds powder. Lost three saber bayonets and one cutlass on the expedition.

May 30.—At 8:35 a. m. went alongside the wharf, navy yard, Washington.

ATLANTIC BLOCKADING SQUADRON.

FROM APRIL 4 TO JULY 15, 1861.

UNITED STATES STEAMER MINNESOTA.

ATLANTIC BLOCKADING SQUADRON.

FROM APRIL 4 TO JULY 15, 1861.

Order of the Secretary of the Navy to Commodore Stringham, U. S. Navy, to hoist his flag on board the U. S. S. Minnesota.

NAVY DEPARTMENT, *April 4, 1861.*

SIR: You are relieved from duty as a member of the naval general court-martial now convened in this city, and also from special duty at Washington connected with the discipline of the service.

You will proceed to Boston, Mass., and when the U. S. steam frigate *Minnesota* shall be put in commission you will hoist your flag on board that vessel and await the further instructions of the Department.

I am, respectfully,

GIDEON WELLES.

S. H. STRINGHAM, U. S. Navy,
Washington.

Report of Flag-Officer Stringham, U. S. Navy, regarding the condition of the flagship Minnesota.

NAVY YARD, BOSTON, *April 11, 1861.*

SIR: I have to report my arrival at this place in obedience to your order of the 4th instant. I find the ship in a rapid state of forwardness. Captain Hudson is driving as fast as possible, with every probability of having her ready for her officers and crew in about fifteen days.

I shall leave again for Brooklyn this afternoon to complete my necessary arrangements for sea, but shall return in a week to remain until the ship sails.

I am, respectfully, your obedient servant,

S. H. STRINGHAM,
Flag-Officer, U. S. Navy.

Hon. GIDEON WELLES,
Secretary of the Navy, Washington, D. C.

Order of the Secretary of the Navy to Flag-Officer Stringham, U. S. Navy, to proceed to Hampton Roads, Va.

Confidential.] NAVY DEPARTMENT, *April 22, 1861.*

SIR: The exigency of the times and recent developments render it necessary that there should be a change from the arrangement as understood in regard to your service at the time you left Washington. It

will therefore be necessary that you proceed immediately to the mouth of Hampton Roads with the *Minnesota*, to protect our commerce, suppress piratical or illegal demonstrations, and guard the public interests in that quarter.

As the mails and telegraph are interrupted, I send you these brief and general instructions by special messenger, who will deposit this letter in the New York post-office, or some other office beyond the point of interruption. I shall endeavor to send you more full instructions before your departure, but I would not have you delay sailing one moment after you can get underway for further orders. Details and special instructions can be communicated to you after your arrival at Hampton Roads, where your presence and that of your ship are required with all possible dispatch.

You will have seen the two proclamations of the President, one of the [15th]* and the other of the [19th]† instant, and are generally advised of the unhappy condition of affairs. Since these proclamations were issued, there have been hostile and insurrectionary movements in and near the waters of the Chesapeake of a threatening character. It is reported that persons without authority have armed vessels under their command, with which they are harassing our commerce and committing other outrages, which you will take measures to prevent, capturing these violators of the public peace, and otherwise proceeding to vindicate the authority of the Government and the flag.

I am, sir, respectfully, etc.,

GIDEON WELLES,
Secretary Navy.

Commodore S. H. STRINGHAM,
Steamer Minnesota, Boston.

Report of Flag-Officer Stringham, U. S. Navy, regarding the condition of the U. S. S. Minnesota.

BOSTON, *April 24, 1861.*

SIR: I have the honor to inform you that I have this day, by publication, directed the officers of the *Minnesota* to report forthwith.

The ship, I think, will not be able to sail in less than twelve days.

Respectfully, your obedient servant,

S. H. STRINGHAM,
Flag-Officer.

Hon. GIDEON WELLES.

Report of Flag-Officer Stringham, U. S. Navy, acknowledging receipt of instructions.

BOSTON, *April 26, 1861.*

SIR: Your letter of instructions, bearing date April 22, is received. I shall have the ship ready as soon as possible, and carry out your instructions of that date fully.

Respectfully, your obedient servant,

S. H. STRINGHAM,
Flag-Officer.

Hon. GIDEON WELLES, *Secretary of Navy.*

---

* Declaring insurrection to exist.

† Declaring blockade of the ports of the seven States in insurrection.

Report of Flag-Officer Stringham, U. S. Navy, regarding preparation of vessels at Boston.

BOSTON, *April 30, 1861.*

SIR: I have no doubt the Department is very anxious about the speedy departure of the *Minnesota* and other vessels here. I can assure the Department everything is being done that can be to hasten the departure of all the vessels. Men are working day and night and no cessation on Sunday. The *Minnesota* is in rapid state of progress. This ship will be ready for her crew by Thursday. If possible we shall sail on Saturday, [I] think by Monday at furthest. May I ask the Department to furnish me with a list of the vessels that will be ordered to report to me as attached to my command?

Respectfully, your obedient servant,

S. H. STRINGHAM,
Flag-Officer.

Hon. GIDEON WELLES,
Secretary of Navy.

Instructions of the Secretary of the Navy to Flag-Officer Stringham, U. S. Navy, appointed to command the bockading squadron, in regard to the institution of the blockade of Southern ports.

NAVY DEPARTMENT, *May 1, 1861.*

SIR: You have been previously instructed to proceed to Boston, and when the U. S. steam frigate *Minnesota* should be put in commission to hoist your flag on board that vessel.

The President has found it necessary to issue proclamations closing the ports of those States which are resisting the laws of the Federal Government, and you have been selected to take command of the squadron that will carry into effect the proclamations at all the ports from the capes of the Chesapeake to the southern extremity of Florida and Key West, including the ports, rivers, and inlets of Chesapeake Bay.

Copies of the proclamation of the President issued on the 19th of April are herewith transmitted, together with instructions from the Department in relation to the blockade. A subsequent proclamation extends the blockade to the ports of Virginia and North Carolina.

The moment the *Minnesota* is ready for sea, you will proceed with her with all dispatch to Hampton Roads, at which point other steamers and vessels will be directed to rendezvous as they shall be fitted and equipped for service, for the purpose of receiving your specific instructions to establish and carry into effect the blockade, which must be strict and absolute.

The more immediate and effectual the blockade is instituted, the more speedy and advantageous will be its results. There is already a considerable naval force at Hampton Roads, waiting your orders as to their destination and service.

Instructions more full and more in detail will be forwarded to you on your arrival in the Chesapeake, and your proximity to the seat of Government will make communication with you easy.

Periodical supplies of coal and provisions will be forwarded to you and to the force before the different ports.

Before sailing from Boston you will have transmitted to the Department a complete muster roll of the crew of the *Minnesota* and a separate list of her officers.

I am, very respectfully, your obedient servant,

GIDEON WELLES.

Flag-Officer S. H. STRINGHAM,
Appointed to Command Blockading Squadron, Boston, Mass.

[Enclosures.]

By the President of the United States of America.—Proclamations.

Whereas an insurrection against the Government of the United States has broken out in the States of South Carolina, Georgia, Alabama, Florida, Mississippi, Louisiana, and Texas, and the laws of the United States for the collection of the revenue can not be effectually executed therein, conformably to that provision of the Constitution which requires duties to be uniform throughout the United States; and

Whereas a combination of persons engaged in such insurrection has threatened to grant pretended letters of marque to authorize the bearers thereof to commit assaults on the lives, vessels, and property of good citizens of the country lawfully engaged in commerce on the high seas and in waters of the United States; and

Whereas an Executive proclamation has been already issued requiring the persons engaged in these disorderly proceedings to desist therefrom, calling out a militia force for the purpose of repressing the same, and convening Congress in extraordinary session to deliberate and determine thereon;

Now, therefore, I, Abraham Lincoln, President of the United States, with a view to the same purposes before mentioned, and to the protection of the public peace and the lives and property of quiet and orderly citizens pursuing their lawful occupations until Congress shall have assembled and deliberated on the said unlawful proceedings, or until the same shall have ceased, have further deemed it advisable to set on foot a blockade of the ports within the States aforesaid, in pursuance of the laws of the United States and of the law of nations in such case provided. For this purpose a competent force will be posted so as to prevent entrance and exit of vessels from the ports aforesaid. If, therefore, with a view to violate such blockade a vessel shall approach or shall attempt to leave either of the said ports, she will be duly warned by the commander of one of the blockading vessels, who will endorse on her register the fact and date of such warning, and if the same vessel shall again attempt to enter or leave the blockaded port she will be captured and sent to the nearest convenient port for such proceedings against her and her cargo as prize as may be deemed advisable.

And I hereby proclaim and declare that if any person, under the pretended authority of the said States, or under any other pretense, shall molest a vessel of the United States, or the persons or cargo on board of her, such person shall be held amenable to the laws of the United States for the prevention and punishment of piracy.

In witness whereof I have hereunto set my hand and caused the seal of the United States to be affixed.

Done at the city of Washington this 19th day of April, A. D. 1861, and of the Independence of the United States the eighty-fifth.

[L. S.] ABRAHAM LINCOLN.

By the President:

WILLIAM H. SEWARD, *Secretary of State.*

Whereas, for reasons assigned in my proclamation of the 19th instant, a blockade of the ports of the States of South Carolina, Georgia, Florida, Alabama, Louisiana, Mississippi, and Texas was ordered to be established; and, whereas, since that date public property of the United States has been seized, the collection of the revenue obstructed, and duly commissioned officers of the United States, while engaged in executing the orders of their superiors, have been arrested and held in custody as prisoners, or have been impeded in the discharge of their official duties without due legal process by persons claiming to act under authority of the States of Virginia and North Carolina, an efficient blockade of the ports of those States will therefore also be established.

In witness whereof I have hereunto set my hand and caused the seal of the United States to be affixed.

Done at the city of Washington this 27th day of April, A. D. 1861, and of the Independence of the United States the eighty-fifth.

[L. S.] ABRAHAM LINCOLN.

By the President:

WILLIAM H. SEWARD, *Secretary of State.*

Order of the Secretary of the Navy to Flag-Officer Stringham, U. S. Navy, appointed to command the blockading squadron, to hoist his flag at the fore-masthead.

NAVY DEPARTMENT, *May 1, 1861.*

SIR: Having been over fifty years in the service, and nearly twenty as a captain, you will hoist your flag at the fore instead of at the mizzen of the *Minnesota.*

The Department in this instance suspends its general order of May 18, 1858, on the ground of your having seen nearly the requisite service as a captain in the Navy, and as an honor to the commander of the Coast Blockading Squadron.

I am, respectfully, etc.,

GIDEON WELLES.

Flag-Officer S. H. STRINGHAM, U. S. Navy,
Boston.

Instructions of the Secretary of the Navy to Flag-Officer Stringham, U. S. Navy, appointed to command the Coast Blockading Squadron, regarding the blockade of Southern ports.

Confidential.] NAVY DEPARTMENT, *May 1, 1861.*

SIR: The President, by proclamation of 19th April, 1861, ordered a blockade of the ports within the States of South Carolina, Georgia, Alabama, Florida, Mississippi, Louisiana, and Texas; and by a supplemental proclamation of the 27th April, 1861, he extends the blockade so as to include the ports of Virginia and North Carolina. In pursuance of the laws of the United States and of the law of nations, in such cases provided, it becomes necessary that a competent force be posted so as to prevent the entrance and exit of vessels from the ports aforesaid.

With this view you will establish and enforce a blockade at each and all of the ports in the States enumerated east of Key West, and a sufficient disposable force will be placed under the command of yourself that you may carry these orders into effect. On you will devolve the duty of blockading all the ports east of Key West.

You will duly notify neutrals of the declaration of blockade, and give to it all the publicity in your power. The blockade must be strict and absolute, and only public armed vessels of foreign powers should be permitted to enter the ports which are placed in a state of blockade. To neutral or foreign vessels that are already in the ports, you will allow a reasonable number of days to leave them. The country relies upon your command, with the squadron of the Gulf, to make this blockade effectual, so as to close all the ports of the States above named, protect our commerce from the depredations of privateers, and contribute by your activity and vigilance to the speedy suppression of the insurrectionary movements and the adjustment of the present unhappy difficulties.

It will not be improper to state to you that a lawful maritime blockade requires the actual presence of an adequate force stationed at the entrance of the port sufficiently near to prevent communication. The only exception to this rule which requires the actual presence of an adequate force to constitute a lawful blockade arises out of the circumstance of the occasional temporary absence of the blockading squadron, produced by accident, as in the case of a storm, which does not suspend the legal operation of a blockade. The law considers an attempt to take advantage of such an accidental removal a fraudulent attempt to break the blockade.

You will permit no neutral or foreign vessel proceeding toward the entrance of a blockaded port to be captured or detained if she shall not have previously received from one of the blockading squadron a special notification of the existence of the blockade. This notification must be inserted in writing on the muster roll of the neutral vessel by the cruiser which meets her; and it should contain the announcement, together with statements of the day and the latitude in which it was made.

The United States have at all times maintained these principles on the subject of blockade, and you will take care not to attempt the application of penalties for a breach of blockade except in cases where your right is justified by these rules.

I am, sir, very respectfully, your obedient servant,

G. WELLES,
Secretary Navy.

Flag-Officer S. H. STRINGHAM,
Commanding Coast Blockading Squadron.

Letter from Flag-Officer Stringham, U. S. Navy, appointed to command the Coast Blockading Squadron, to the Secretary of the Navy, requesting instructions regarding persons seeking protection of the United States flag.

BOSTON, *May 3, 1861.*

SIR: I have the honor to address you, to ask if the Department has any further instructions to give me in reference to the important interests and duties which will devolve upon me to protect and perform, and I venture most respectfully to call the attention of the Department to one particular subject which I think must and will arise, and upon

which I shall no doubt early in my official position be called upon to decide and act. I refer to appeals which may be made to me by persons in the revolted States, perhaps elsewhere, for that protection and shelter which the American flag and those having it in charge always have afforded (as I trust it always will) to all claiming its shelter and protection. I respectfully call the attention of the Department to this important subject.

Respectfully, your obedient servant,

S. H. STRINGHAM,
Flag-Officer.

Hon. GIDEON WELLES,
Secretary of Navy.

Further instructions of the Secretary of the Navy to Flag-Officer Stringham, U. S. Navy, appointed to command the Coast Blockading Squadron, regarding the institution of blockade.

Confidential.] NAVY DEPARTMENT, *May 4, 1861.*

SIR: You received general instructions from the Department, under date of the 1st of May, for carrying into effect the blockade which the President has ordered, and which is the immediate and special object of your command. It was stated in those instructions that you would allow to neutral vessels in port a reasonable number of days to depart after the blockade should be established. The Department would in every instance allow at least fifteen days for vessels to depart, with or without cargo, after the blockade is set with a sufficient force. Notice should be given by such extended publicity as you can command at each and every port as soon as the blockade is established.

Commodore Pendergrast will inform you of the condition of affairs and orders received. He will also assist with the *Cumberland* in enforcing the blockade for the present.

I need not enjoin vigilance and promptness to prevent privateering and depredations; but I send herewith copies and extracts of letters received at the Department touching the movements on foot at Savannah.

It was the intention of the Department to have had the *Niagara* stationed at Savannah, but the intelligence received this morning induces a necessity that she should go into the Gulf, to intercept the vessels carrying arms to New Orleans and Mobile.

There are several vessels in the waters of the Chesapeake to aid you, and others which are being equipped will soon arrive out and report. The names, officers, crews, and armaments of these vessels are not yet reported in full to the Department, in consequence of the haste and activity necessary to get them afloat at the earliest moment.

Some of the vessels can, it is believed, aid in blockading the Mississippi and Mobile. But much must be committed to your judgment and discretion.

Commodore Mervine will shortly proceed to the Gulf with the *Mississippi*, and other vessels will be speedily dispatched to reenforce the blockading squadron and close Galveston and other ports.

I am, sir, respectfully, your obedient servant,

GIDEON WELLES,
Secretary Navy.

Flag-Officer S. H. STRINGHAM,
Commanding Blockading Squadron.

Report of Flag-Officer Stringham, U. S. Navy, commanding Coast Blockading Squadron, of the hoisting of his flag on the U. S. S. Minnesota.

BOSTON, MASS., *May 4, 1861.*

SIR: I have the honor to inform the Department that I have this day hoisted my flag on board the U. S. steam frigate *Minnesota*. I shall proceed to sea the moment Captain Van Brunt reports the ship as ready. I most respectfully inform the Department that the paymaster is entirely without funds to make any advances. The officers have contracted some necessary debts for stores, etc., and to go to sea without being able to liquidate these debts will be most embarrassing. I respectfully suggest that the Department by telegraph authorize the navy agent here to supply the ship with funds.

Respectfully, your obedient servant,

S. H. STRINGHAM,
Flag-Officer.

Hon. GIDEON WELLES,
Secretary of Navy.

Report of Flag-Officer Stringham, U. S. Navy, commanding Coast Blockading Squadron, acknowledging the honor conferred by the Department.

U. S. STEAM FRIGATE MINNESOTA,
Boston, May 6, 1861.

SIR: I respectfully acknowledge the receipt of your esteemed favor, under date Navy Department, May 1, 1861, in which you inform me the Department has been pleased in my case "to suspend its general order of May 18, 1858."

The flattering terms contained in your communication ordering me to hoist my flag at the fore instead of at the mizzen of the *Minnesota*, where I had placed it, can only be returned by the assurance that I will endeavor to merit the high honor conferred, both by this mark of the confidence of the Department and the much greater one in being appointed at this important time and in our country's hour of trial as "commander of the Coast Blockading Squadron."

Respectfully, your obedient servant,

S. H. STRINGHAM,
Flag-Officer.

Hon. GIDEON WELLES,
Secretary of Navy.

Instructions of the Secretary of the Navy to Flag-Officer Stringham, U. S. Navy, commanding Coast Blockading Squadron, regarding the protection of American interests and citizens.

Confidential.] NAVY DEPARTMENT, *May 6, 1861.*

SIR: Yours of the 3d instant is received. Further instructions in relation to the blockade were sent to Old Point on the 4th instant, which you will have received on your arrival. Commodore Pendergrast will advise you of the steps he has taken. There will for a time be some irregularity in regard to the vessels composing the blockading

squadron, from the hasty manner in which the vessels and officers have been collected and equipped. This you will soon regulate after they shall have reported to you.

In addition to the instructions enjoining a vigilant guardianship of American interests, you will not fail, when invoked, to interpose the authority with which you are invested for the protection of those who claim shelter under the American flag. Let the emblem of our nationality, which you and our tars have supported with honor in every land, afford security to American citizens wherever they ask for its aid or seek its protection.

I am, sir, respectfully, your obedient servant,

GIDEON WELLES,
Secretary Navy.

Flag-Officer S. H. STRINGHAM,
Commanding Blockading Squadron.

P. S.—On the 2d instant the *Niagara* was ordered to proceed to Charleston and institute a rigid blockade. The day on which she sailed information was communicated to the Department of a large shipment of arms from England and Belgium to New Orleans, rendering it necessary that the *Niagara* should be detached from the Charleston blockade and proceed at once to the Gulf. You will find it necessary, therefore, to place a force before Charleston at the earliest possible moment to enforce the blockade.

Report of Flag-Officer Stringham, U. S. Navy, commanding Coast Blockading Squadron, acknowledging Department's instructions.

U. S. STEAM FRIGATE MINNESOTA,
Boston, May 7, 1861.

SIR: I have the honor to acknowledge the receipt of orders dated Navy Department, May 1, 1861; also instructions in regard to blockading, bearing same date; also five copies of a proclamation by the President of the United States of America, dated Washington, April 19, 1861, declaring blockade of the States of South Carolina, Georgia, Alabama, Florida, Mississippi, Louisiana, and Texas.

Respectfully, your obedient servant,

S. H. STRINGHAM,
Flag-Officer.

Hon. GIDEON WELLES,
Secretary of the Navy.

Report of Flag-Officer Stringham, U. S. Navy, commanding Coast Blockading Squadron, of the departure from Boston navy yard of the U. S. S. Minnesota.

U. S. STEAM FRIGATE MINNESOTA,
Boston Harbor, May 8, 1861.

SIR: I have the honor to inform the Department that we left the wharf at the navy yard at about half past 8 o'clockt his morning and are now leaving the harbor. I shall proceed to obey your instructions.

I am sorry to inform the Department that the ship sailed short of officers, in the absence of the captain of the marine guard, detached by your orders, received only the day before sailing, and that we are further short of a passed assistant surgeon, whom we need very much, because the fleet surgeon has always been sick at sea for the past ten years, and I fear it may be [the] case now. The assistant surgeon has never been to sea before. I hope these important officers may be provided at the earliest convenience.

Respectfully, your obedient servant,

S. H. STRINGHAM,
Flag-Officer.

Hon. GIDEON WELLES,
Secretary of the Navy.

Instructions from the Secretary of the Navy to Flag-Officer Stringham, U. S. Navy, commanding Coast Blockading Squadron, regarding the blockade of Charleston, S. C.

Confidential.] NAVY DEPARTMENT, *May 8, 1861.*

SIR: You were informed by letter on the 6th instant that Captain McKean with the *Niagara* had been ordered to proceed to the Gulf, and, in consequence of this, the port of Charleston would be relieved of the rigid blockade which it is a primary object to carry into full effect. The *Harriet Lane* being no longer necessary on the upper waters of the Chesapeake has been ordered to Hampton Roads to report to you for orders. You can, if you choose, direct that she perform blockade services before Charleston, or order her on other duty, as she has been placed by the Secretary of the Treasury at the disposal of the Navy Department.

It is the wish of the Department that the vessels composing the blockading squadron under your command should be stationed to duty at the different ports by yourself, and that you report to the Department in regard to them respectively, and from time to time, as you have facts or information concerning each.

It has been already stated that reasonable time should be allowed neutral vessels to leave ports after blockade commences, at least fifteen days, and you will notify the blockading squadron in every instance to this effect. There are rumors of privateers abroad, and fitting out. Whatever truth there may be in these rumors, it is essential there should be promptness and vigilance, not only in rigidly enforcing the blockade, but in capturing every piratical vessel or privateer on our coast. The vessels of the Navy, and those chartered and purchased for the emergency, destined for the coast blockade, will be sent to you from time to time as they are equipped and manned.

Should you order the *Harriet Lane* to Charleston, please forward any dispatches you may have, or that are on board the *Cumberland*, to Captain McKean, of the *Niagara*, who it is supposed is still before Charleston.

I am, sir, respectfully, etc.,

GIDEON WELLES,
Secretary Navy.

Flag-Officer S. H. STRINGHAM,
Commanding Blockading Squadron.

Order of the Secretary of the Navy to commandant navy yard, New York, regarding U. S. vessels Perry and Dawn.

NAVY DEPARTMENT, *May 9, 1861.*

SIR: The moment the brig *Perry* or the steamer *Dawn* are ready for sea, you will direct them to proceed to Hampton Roads, Virginia, and report to Flag-Officer Stringham, or the senior commanding officer present, for service in the blockading squadron.

Before sailing you will have muster rolls of these vessels transmitted to the Department.

I am, respectfully, your obedient servant,

GIDEON WELLES.

Commodore S. L. BREESE,
Commandant Navy Yard, New York.

Order of the Secretary of the Navy to Captain Faunce, U. S. Revenue Marine, regarding U. S. S. Harriet Lane.

Confidential.] NAVY DEPARTMENT, *May 10, 1861.*

SIR: You will proceed to Hampton Roads, and report to Flag-Officer Stringham, of the Coast Blockading Squadron, who is or will soon be there, and report for such duty as he may order.

I am, sir, respectfully, etc.,

GIDEON WELLES,
Secretary of the Navy.

Captain JNO. FAUNCE,
Commanding Steamer Harriet Lane.

Order of the Secretary of the Navy to Flag-Officer Stringham, U. S. Navy, commanding Coast Blockading Squadron, regarding families of refugees.

NAVY DEPARTMENT, *May 11, 1861.*

SIR: I send herewith a copy of the petition of sundry refugees from Norfolk to the President, asking a safe conveyance of their families to New York. It is the wish of the President that you extend such aid, in furtherance of their request, to their unfortunate families, as in your judgment the circumstances require.

I am, very respectfully, your obedient servant,

GIDEON WELLES,
Secretary Navy.

Flag-Officer S. H. STRINGHAM,
Commanding Blockading Squadron.

[Enclosure.]

BROOKLYN NAVY YARD, *May 7, 1861.*

SIR: We, the undersigned citizens of the United States of America, having been compelled to flee the State of Virginia because of our loyalty to our flag and our country, are under the necessity of applying to you for protection for our families (who being still in Virginia are exposed to the power of our enemies) and assistance in bringing them

Letter from Flag-Officer Pendergrast, U. S. Navy, commanding Home Squadron, to Flag-Officer Stringham, U. S. Navy, commanding Coast Blockading Squadron, informing him of the names of the vessels composing the blockading force.

U. S. FLAGSHIP CUMBERLAND,
Off Fortress Monroe, Va., May 13, 1861.

SIR: I have the honor to inform you that the following vessels compose the blockading squadron in these waters: *Cumberland*, steamer *Star* [*Monticello*], *Quaker City*, steam tug *Yankee*, and steamer *Harriet Lane*, and steam tug *Young America*, used as a tender to this ship.

I beg also to inform you that the commandant of Fortress Monroe and myself have agreed upon the following night signals: In case of an alarm, a blue light will be burned; in case of an attack, a rocket will be sent up.

The fortress fires a gun in case of an attack.

Very respectfully, your obedient servant,

G. J. PENDERGRAST,
Flag-Officer, Commanding Home Squadron.

Flag-Officer SILAS H. STRINGHAM,
Commanding U. S. Blockading Squadron, Hampton Roads.

Report of Flag-Officer Stringham, U. S. Navy, commanding Coast Blockading Squadron, regarding proposed disposition of vessels.

U. S. STEAM FRIGATE MINNESOTA,
Hampton Roads, May 14, 1861.

SIR: I have the honor to acknowledge receipt of your further instructions in reference to blockading, bearing dates May 4, 6, and 8, 1861; also your favor of May 10, enclosing tide tables of points on the Chesapeake Bay and of the Potomac River.

I shall employ the steamer *Dawn*, commanded by Commander William Chandler, to aid in blockading in these waters, and send the *Harriet Lane* immediately to Charleston to relieve the *Niagara*, and when the *Massachusetts* and *South Carolina*, now fitting out at Charlestown [Boston] navy yard, shall arrive here, I shall employ them south, and think they will prove very serviceable vessels.

The wharf at Old Point is in a very bad state. I wish arrangements could be made with the Army to have it put in better condition.

Respectfully, your obedient servant,

S. H. STRINGHAM,
Senior Flag-Officer Blockading Squadron.

Hon. GIDEON WELLES,
Secretary of Navy.

Report of Flag-Officer Stringham, U. S. Navy, commanding Coast Blockading Squadron, of the capture of schooners Mary Willis, Delaware Farmer, Emily Ann, and ship Argo.

U. S. S. MINNESOTA,
Hampton Roads, May 14, 1861.

SIR: I have the honor to inform the Department that I have this day captured three schooners (loaded with tobacco, from Richmond, Va., bound to Baltimore), under and by virtue of the proclamation of the

President of the United States, establishing a blockade of the States in rebellion against the Government. Their names are *Mary Willis*, *Delaware Farmer*, and *Emily Ann*. I have also captured the ship *Argo*, bound from the same place to Bremen. Some part of her cargo is said to be on foreign account, but she being an American vessel, I have not thought this sufficient to excuse her. As I shall have to send officers from time to time with prizes, I should be pleased if you can supply me with some passed midshipmen or midshipmen. The first three vessels have been sent by me under charge of Lieutenant N. C. Bryant, U. S. Navy, to Philadelphia, and the *Argo* under charge of Midshipman R. S. McCook to New York.

Respectfully, your obedient servant,

S. H. STRINGHAM,
Senior Flag-Officer Blockading Squadron.

Hon. GIDEON WELLES,
Secretary of Navy.

Letter from Flag-Officer Pendergrast, U. S. Navy, commanding Home Squadron, to Flag-Officer Stringham, U. S. Navy, commanding Coast Blockading Squadron, naming the commanders of the blockading vessels.

U. S. FLAGSHIP CUMBERLAND,
Off Fortress Monroe, Va., May 14, 1861.

SIR: I herewith give you a list of the commanders of the vessels comprising the blockading squadron: Sloop *Cumberland*, Captain John Marston; steamer *Star* [*Monticello*], Captain Henry Eagle; *Harriet Lane*, Captain John Faunce; steamer *Quaker City*, Acting Master Mather; steamer *Yankee*, Acting Master Germain.

Notification of a blockade was issued by me on the 30th of April.

Very respectfully, your obedient servant,

G. J. PENDERGRAST,
Commanding Home Squadron.

Flag-Officer SILAS H. STRINGHAM,
Commanding U. S. Blockading Squadron.

Report of commandant navy yard, New York, regarding U. S. brig Perry.

NAVY YARD, NEW YORK, *May 14, 1861.*

SIR: I have to report the sailing of the U. S. brig *Perry*, Lieutenant E. G. Parrott, for the Chesapeake Bay.

Very respectfully, your obedient servant,

SAML. L. BREESE,
Commandant.

Hon. GIDEON WELLES,
Secretary of the Navy, Washington.

Report of Flag-Officer Stringham, U. S. Navy, commanding Coast Blockading Squadron, regarding the services of steamer Quaker City.

U. S. S. MINNESOTA,
Hampton Roads, May 15, 1861.

SIR: I have the honor to inform the Department that the steamer *Quaker City* has been doing great service up to this time gratuitously, and will thus continue to serve up to the 25th of May. As she is o

great service in her position at Cape Henry, please inform me on what terms I may keep her employed. I should think from $500 to $600 per day would be a liberal allowance. The steam tug you notified Flag-Officer Pendergrast was to be sent has not arrived. I shall be gratified to have her.

Respectfully, your obedient servant,

S. H. STRINGHAM,
Senior Flag-Officer Blockading Squadron.

Hon. GIDEON WELLES,
Secretary of Navy.

Report of Flag-Officer Stringham, U. S. Navy, commanding Coast Blockading Squadron, of aid afforded to captain and crew of American bark D. C. Pearce.

U. S. S. MINNESOTA,
Hampton Roads, May 15, 1861.

SIR: I have the honor to inform the Department that yesterday I received on board this ship the following persons, captain and crew of the American bark *D. C. Pearce;* also the daughter of the captain, viz, C. Gale, captain; Amelia Gale; Thomas Quayle, L. Crowell, Charles Daly, Charles Smith, Dennis Barkous, L. Euroth, and Thomas Godfrey, crew.

Captain Gale put in here in distress with his vessel a short time since. His vessel, valued at $20,000, was taken from him and sunk in the channel at Norfolk.

These persons come properly under the instructions of the Department for protection by the American flag. They are yet on board this ship. I shall take advantage of the departure for Boston of the *Pembroke*, a Massachusetts steamer, to forward these persons immediately North, writing a letter to Governor Andrew, explaining all the circumstances of the case. I send copies of the original passes given these persons by Brigadier-General Gwynn and W. W. Lamb, mayor.

HDQRS. BRIGADIER-GENERAL COMMANDING FORCES IN NORFOLK HARBOR,
Norfolk, Va., May 13, 1861.

Permission is hereby granted C. Gale, captain of the bark *D. C. Pearce*, his daughter Amelia Gale, Thomas Quayle, L. Crowell, Charles Daly, Charles Smith, Dennis Barkous, L. Euroth, and Thomas Godfrey, crew of said bark, to leave this harbor, by the river or otherwise, for the State of Ohio. For this purpose they will pass the batteries.

By order of Walter Gwynn, brigadier-general commanding forces in Norfolk harbor:

SAM. WATTS,
Aid-de-Camp.

MAYOR'S OFFICE, *Norfolk, May 13, 1861.*

C. Gale, captain of the bark *D. C. Pearce*, recently taken and sunk as an obstruction to prevent ingress into this harbor, and his daughter Amelia Gale, and Thomas Quayle, L. Crowell, Charles Daly, Charles Smith, Dennis Barkous, L. Euroth, and Thomas Godfrey, crew of said bark, wish to return to Ohio, and in my opinion there is no cause to object to their doing so.

W. W. LAMB,
Mayor.

Trusting I have not exceeded instructions, and hoping this will meet the approbation of the Department,

I am, respectfully, your obedient servant,

S. H. STRINGHAM,
Senior Flag-Officer Blockading Squadron.

Hon. GIDEON WELLES,
Secretary Navy.

Letter from the Secretary of the Navy to Flag-Officer Pendergrast, U. S. Navy, commanding Home Squadron, acknowledging receipt of communication regarding batteries on York River.

NAVY DEPARTMENT, *May 15, 1861.*

SIR: Your dispatch* of the 10th instant, relative to the batteries on York River, has been received, and will receive attention.

Two vessels have been purchased for the purpose of being used at Hampton Roads as receiving ships for coal.

The Department will thank you to make any suggestions relative to fresh water for the squadron.

The steam frigate *Roanoke* is preparing for sea at New York, as your flagship, and will be sent to Hampton Roads.

I am, respectfully, your obedient servant,

GIDEON WELLES.

Flag-Officer G. J. PENDERGRAST,
Commanding Home Squadron, off Fortress Monroe, Va.

Letter from the Secretary of the Navy to Flag-Officer Stringham, U. S. Navy, commanding Coast Blockading Squadron, transmitting copy of instructions regarding renewal of oath of allegiance and making acting appointments.

NAVY DEPARTMENT, *May 16, 1861.*

SIR: I herewith enclose for your information and guidance, in cases where they are applicable, a copy of instructions in relation to administering anew the oath of allegiance, making acting appointments, etc., issued by the Department on the 13th instant, to the commandants of certain navy yards.

I am, respectfully, your obedient servant,

GIDEON WELLES.

Flag-Officer S. H. STRINGHAM,
Comdg. Coast Blockading Squadron, Hampton Roads, Virginia.

[Enclosure.]

NAVY DEPARTMENT, *May 13, 1861.*

SIR: The following instructions are issued for your guidance:

You will administer the oath anew to all the officers and heads of the departments individually, and to all the employés of the Government collectively, as convenient.

Chartered vessels having guns are to be commanded by officers of the Navy. The first lieutenant will also be an officer of the Navy, if possible, or one who has served as such. The exigencies of the service may require that other appointments shall be taken from civil life.

Acting masters for watch officers, assistant surgeons, and first, second, and third assistant engineers will be allowed as required, with corresponding pay to those ranks in the Navy; also master's mates at $40 per month and one ration a day. Coast pilots may be employed when necessary at from $50 to $60 per month and a ration.

The officer of the Navy in command of such vessel may appoint a suitable person to perform the duties of clerk and acting paymaster, who shall enter into bonds for $5,000, with two sureties approved by the U. S. district attorney. The compensation of said clerk and acting paymaster shall be $1,200 per annum and one ration.

---

*See vol. 4, p. 381.

All these acting appointments, excepting those who have held commissions in the Navy, are to be subjected to such examination as the commandant of the station can conveniently arrange, so that persons not fully competent in every respect may be at once rejected.

Persons serving on board of the vessels when chartered will be appointed to the above-mentioned places, if qualified, upon being nominated to the Department.

All communications should be addressed to the Secretary of the Navy.

I am, respectfully, your obedient servant,

GIDEON WELLES.

Order of the Secretary of the Navy to Lieutenant Trenchard, U. S. Navy, commanding steamer Keystone State, to proceed to New York for the examination of that vessel as to availability for naval use.

NAVY DEPARTMENT, *May 16, 1861.*

SIR: After receiving on board the steamer *Keystone State* the munitions, etc., to be shipped to New York, you will proceed with her to that port.

The Department has directed Commodore Breese to have the *Keystone State* examined as to her availability for naval purposes. When the examination is completed, you will return with her to the navy yard, Washington, bringing such provisions, etc., as are ready to be shipped to this point.

You will take charge of any mail or other matter now at the Washington yard intended for the squadron in Hampton Roads and deliver it.

Flag-Officer Stringham has been directed to aid, as far as in his power, sundry refugees from Norfolk in obtaining a conveyance to New York. You will communicate with him on the subject at Hampton Roads and afford a passage to New York to any of the refugees that he may direct.

I am, respectfully, your obedient servant,

GIDEON WELLES.

Lieutenant S. D. TRENCHARD,
Commanding Steamer Keystone State, Washington, D. C.

Letter from the Secretary of the Navy to Flag-Officer Stringham, U. S. Navy, commanding Coast Blockading Squadron, transmitting list of steamers employed about Charleston, S. C.

NAVY DEPARTMENT, *May 16, 1861.*

SIR: I herewith enclose a statement of the number and character of vessels said to be employed about Charleston; also additional tidal data of the Chesapeake Bay.

I am, respectfully, your obedient servant,

GIDEON WELLES.

Flag-Officer S. H. STRINGHAM,
Comdg. Blockading Squadron, Hampton Roads, Virginia.

[Enclosure.]

BOSTON, *May 11, 1861.*

SIR: I was at Charleston, S. C., a few weeks since and ascertained the number and kind of steamers owned and employed there, and

thinking it might possibly be of service to the Department to know (I have since my return been informed by a reliable party) that the following vessels are now in that port:

Steamer *Nashville*, about 1,500 tons, side-wheel.
Steamer *Isabel*, about 1,000 tons, side-wheel, strong boat.
Steamer *Cahaba*, about 700 tons, side-wheel.
Steamer *Magordon*, about 700 tons, side-wheel.
Steamer *Carolina*, about 700 tons, side-wheel.
Steamer *William Seabrook*, about 700 tons, side-wheel.
Steamer *Emma*, about 350 tons, side-wheel, new boat.
Steamer *Cecil*, about 500 tons, side-wheel.
Steamer *General Clinch*, about 250 tons, side-wheel.
Steamer *Nino*, about 200 tons, tugboat.
Steamer *Lady Davis*, about 250 tons, tugboat.

Hoping the above may be of service to you, I remain, your obedient servant,

HARRISON LORING.

Hon. GIDEON WELLES,
Secretary U. S. Navy, Washington, D. C.

Letter from Flag-Officer Pendergrast, U. S. Navy, commanding Home Squadron, to Lieutenant-Colonel De Russy, U. S. Army, regarding use of tug.

U. S. FLAGSHIP CUMBERLAND,
Off Fortress Monroe, Va., May 16, 1861.

SIR: Your communication * of this date has been received. You can have the tug for the purposes you wish.

I will make your wish known to Flag-Officer Stringham.

Very respectfully, your obedient servant,

G. J. PENDERGRAST,
Flag-Officer, Commanding Home Squadron.

Lieutenant-Colonel DE RUSSY,
Corps of Engineers, U. S. Army.

Order of the Secretary of the Navy to Flag-Officer Stringham, U. S. Navy, changing the name of his squadron to Atlantic Blockading Squadron, and designating the vessels of his command.

Confidential.] NAVY DEPARTMENT, *May 17, 1861.*

SIR: The name of your squadron will be the Atlantic Blockading Squadron, and will be composed of the following-named vessels, viz: *Minnesota*, *Cumberland*, *Perry*, *Harriet Lane*, *Dawn*, *Monticello*, *Union*, *Reliance*, *Resolute*, *Daylight*, *Mount Vernon* (to return from the Gulf), *Penguin*, *Albatross*, *Wabash*, and Commander Ward's flotilla.

I am, very respectfully, etc.,

GIDEON WELLES,
Secretary Navy.

Flag-Officer S. H. STRINGHAM,
Hampton Roads.

---

* Not found.

Order of the Secretary of the Navy to Flag-Officer Pendergrast, U. S. Navy, changing the name of his squadron to West India Squadron, and designating vessels of his command.

Confidential.] NAVY DEPARTMENT, *May 17, 1861.*

SIR: The name of your squadron will be the West India Squadron, and will be composed of the following-named vessels, viz:

Roanoke, Macedonian, Bainbridge, Vandalia.

I am, very respectfully, your obedient servant,

GIDEON WELLES.

Flag-Officer G. J. PENDERGRAST,
Hampton Roads.

Report of Flag-Officer Pendergrast, U. S. Navy, commanding West India Squadron, regarding flagship Roanoke.

U. S. FLAGSHIP CUMBERLAND,
Off Fortress Monroe, Va., May 17, 1861.

SIR: I have the honor to acknowledge the receipt of the Department's letter, under date of May 15, informing me that the steam frigate *Roanoke* was fitting out at New York as my flagship, and desire to express to the Department the great satisfaction the receipt of that letter gave me.

I would also state that if the *Cumberland* sustained any injury to her copper in forcing her way over the obstructions in Hampton Roads, it is very desirable that she should be docked next month, as the worms commence their depredations in the first part of June.

I have the honor to be, sir, very respectfully, your obedient servant,

G. J. PENDERGRAST,
Flag-Officer, Commanding Home [West India] Squadron.

Hon. GIDEON WELLES,
Secretary of the Navy, Washington, D. C.

Report of Flag-Officer Pendergrast, U. S. Navy, commanding West India Squadron, regarding fresh-water supply.

U. S. FLAGSHIP CUMBERLAND,
Off Fortress Monroe, Va., May 17, 1861.

SIR: I have the honor to inform the Department that I have made enquiries in relation to fresh water, and find outside of the fortress about 130,000 gallons in cisterns and about 40,000 gallons on the Rip Raps, and within the fort about 125,000 gallons; in addition to this, wells could be sunk in the fort, from which a considerable supply could be had.

I would also state that in the direction of Hampton and within range of the guns of the fort an unlimited supply of good water can be had for the use of the squadron and fortress from wells.

Mr. Edward Clayton, of No. 134 Lee street, Baltimore, has offered to the commandant of the fort to supply good water at the rate of 1,000 to 50,000 gallons per day if tanks or casks were furnished him for that purpose, if the Department so desires it.

I would also state that the land in and around the fort being of sand is such that wells could be sunk anywhere and good water procured.

If the Department should make enquiries and find Mr. Clayton (who is connected with the Baltimore waterworks) to be a reliable man, and tanks were furnished him, with the assistance of a steamer, this place could be supplied with an abundance of good water at all times.

I have not seen Mr. Clayton, and therefore can not state his terms.

I have the honor to be, very respectfully, sir, your obedient servant,

G. J. PENDERGRAST,
Flag-Officer, Commanding Home [West India] Squadron.

Hon. GIDEON WELLES,
Secretary of the Navy, Washington, D. C.

[Endorsement.]

I have been here so short a time that I am unable to give any opinion on the above subject.

Respectfully forwarded.

S. H. STRINGHAM,
Senior Flag-Officer.

Report of Flag-Officer Stringham, U. S. Navy, commanding Atlantic Blockading Squadron, giving the names of captured vessels.

U. S. S. MINNESOTA,
Hampton Roads, May 17, 1861.

SIR: I have the honor to inform the Department that since my arrival here I have captured the following vessels, some of which are now here, others dispatched under charge of officers:

Ship *Argo*, from Richmond, with tobacco; sent to New York in charge of Midshipman McCook.

Schooner *Almira Ann*, from Chickahominy River, with ship timber, which, being very much needed at Fortress Monroe for building platforms, etc., I have ordered to be discharged for the use of this fort.

Schooner *Emily Ann*, from Richmond, with tobacco.

Schooner *Mary Willis*, from Richmond, with tobacco.

Schooner *Delaware Farmer*, from Richmond, with tobacco.

The three schooners last above named I have sent to Philadelphia, in charge of Lieutenant N. C. Bryant, to be delivered over by him to the U. S. district judge, with further orders to report his arrival to the Department.

Ship *North Carolina*, from Havre, in ballast, bound to Norfolk, Va., and there owned, I have placed in charge of Lieutenant J. G. Mitchell, with orders to proceed to New York.

Schooner *J. H. Etheridge*, from Petersburg, Va.; cargo, tobacco.

Schooner *Mary*, from Richmond, Va.; cargo, tobacco.

Schooner *William and John*, from Petersburg, Va.; cargo, tobacco.

Schooner *Industry*, from Richmond, Va.; cargo, hay and steam boiler.

Schooner *William Henry*, from Richmond, Va.; cargo, tobacco.

Schooner *Belle Conway*, from Richmond, Va.; cargo, tobacco.

The last six named schooners will be sent to Philadelphia as soon as possible, to be delivered into custody of the proper judicial authority, with the exception of the schooner *Industry*, whose cargo I have ordered to be discharged for the use of Fortress Monroe, after which, from the

very insignificant value of the schooner herself from age and general decay, I shall allow the captain to depart with her.

All the above vessels have been captured by me for attempting to violate the blockade, which has been fully established here and of which notice has been given.

Respectfully, your obedient servant,

S. H. STRINGHAM,
Senior Flag-Officer Blockading Squadron.

Hon. GIDEON WELLES,
Secretary of Navy.

Report of Flag-Officer Stringham, U. S. Navy, commanding Atlantic Blockading Squadron, acknowledging Department's communications.

U. S. S. MINNESOTA,
Hampton Roads, May 17, 1861.

SIR: I have the honor to acknowledge the receipt of yours dated Navy Department, May 11, 1861, with the enclosed copy of petition of sundry refugees from Norfolk, to the President. I will endeavor fully to carry out the wishes of the President as expressed in your letter of the 11th.

I also acknowledge receipt of yours of May 14, enclosing copy of letter from Commodore Breese of May 11.

Respectfully, your obedient servant,

S. H. STRINGHAM,
Senior Flag-Officer Blockading Squadron.

Hon. GIDEON WELLES,
Secretary of Navy.

Report of Flag-Officer Stringham, U. S. Navy, commanding Atlantic Blockading Squadron, requesting instructions regarding disposition of small captured vessels.

U. S. S. MINNESOTA,
Hampton Roads, May 17, 1861.

SIR: I should be pleased to receive instructions from you in regard to vessels which are disposed to violate the blockade, yet are too small and worthless to go to the expense of sending as prizes, yet which may be used to convey troops and munitions from point to point in these waters.

With your authority I will act according to my best judgment and under surveys as to their being worthy to be sent forward as prizes or destroyed. Or shall I send them to the nearest point, Baltimore?

Respectfully, your obedient servant,

S. H. STRINGHAM,
Senior Flag-Officer Blockading Squadron.

Hon. GIDEON WELLES,
Secretary of Navy.

Report of Flag-Officer Stringham, U. S. Navy, commanding Atlantic Blockading Squadron, of the capture of bark Star.

U. S. S. MINNESOTA,
Hampton Roads, May 17, 1861.

SIR: I have the honor to inform the Department that I have just seized the American bark *Star*, from Richmond, bound to Bremen, tobacco loaded.

I shall send her forward to New York as a prize.

Respectfully, your obedient servant,

S. H. STRINGHAM,
Senior Flag-Officer Blockading Squadron.

Hon. GIDEON WELLES,
Secretary of Navy.

Order of the Secretary of the Navy to Captain Mercer, U. S. Navy, commanding U. S. S. Wabash, to report for duty in Hampton Roads.

NAVY DEPARTMENT, *May 17, 1861.*

SIR: The U. S. steam frigate *Wabash*, under your command, is to form a part of the Coast Blockading Squadron, of which Captain S. H. Stringham is the flag-officer.

As soon, therefore, as she is prepared for this service, and in all respects ready for sea, you will proceed with her to Hampton Roads, Virginia, and report to Flag Officer Stringham for further instructions.

Before your departure from New York, transmit to the Department a muster roll of the *Wabash*, and a separate list of her officers.

I am, respectfully, your obedient servant,

GIDEON WELLES.

Captain SAMUEL MERCER,
Commanding U. S. Steam Frigate Wabash, New York.

Report of Flag-Officer Stringham, U. S. Navy, commanding Atlantic Blockading Squadron, of the arrival at Hampton Roads of U. S. vessels Perry and Keystone State.

U. S. S. MINNESOTA,
Hampton Roads, May 18, 1861.

SIR: I have the honor to inform the Department (through the medium of the steamer *George Peabody*, which only touches here for a very short [time] on her way to Washington) that the brig *Perry* and steamer *Keystone State* have arrived but this moment.

Respectfully, your obedient servant,

S. H. STRINGHAM,
Senior Flag-Officer Blockading Squadron.

Hon. GIDEON WELLES,
Secretary Navy.

Report of Flag-Officer Pendergrast, U. S. Navy, commanding West India Squadron, making suggestions in view of change of flagship.

U. S. FLAGSHIP CUMBERLAND,
Off Fortress Monroe, Va., May 18, 1861.

SIR: As the steam frigate *Roanoke* has been ordered as my flagship I respectfully suggest to the Department that I be authorized to send this ship to New York under Captain Marston for the double purpose of having her bottom examined, and that the officers and crew of this ship may be transferred to the *Roanoke*. I would also state to the Department that in case Flag-Officer Stringham should leave here, I can transfer my flag to any one of the vessels composing the blockading squadron, or take up my residence at Fortress Monroe, and superintend the blockade of the ports of Virginia under general instructions from Flag-Officer Stringham. I would also avail myself of this opportunity to state that no paymaster has yet arrived here, and it is indispensable for the comfort of the officers and crew that one should be sent here with as little delay as possible, and before this ship sails for New York. I would also respectfully request that Commander J. B. Marchand be ordered to the Home Squadron as captain of the fleet and inspector of ordnance.

I have the honor to be, very respectfully, sir, your obedient servant,

G. J. PENDERGRAST,
Flag-Officer, Commanding Home [West India] Squadron.

Hon. GIDEON WELLES,
Secretary of the Navy, Washington, D. C.

Instructions of Flag-Officer Stringham, U. S. Navy, commanding Atlantic Blockading Squadron, to Lieutenant Parrott, U. S. Navy, commanding U. S. brig Perry, to blockade the harbor of Fernandina, Fla.

U. S. S. MINNESOTA,
Hampton Roads, May 18, 1861.

SIR: Herewith find enclosed copies of the proclamations of the President of the United States in reference to blockading.

You will proceed off the harbor of Fernandina, Fla., and the mouth of St. Mary's River.

I wish to impress upon you the importance of maintaining a strict blockade, preventing the ingress and egress of all vessels, excepting under the following exception:

NAVY DEPARTMENT, *May 4, 1861.*

The Department would in every instance allow at least fifteen days for neutral vessels to depart, with or without cargo, after the blockade is set with sufficient force.

You will not capture or detain any foreign vessel proceeding toward the entrance of a blockaded port if she shall not previously have received from one of the blockading squadron a special notification of the existence of the blockade, provided she has not contraband goods on board.

This notification must be inserted in writing on the muster roll of the neutral vessel by the cruiser which meets her, and it should contain the announcement, together with statements of the day and the latitude and longitude in which it was made.

Wishing you a pleasant voyage, I am, respectfully, your obedient servant,

S. H. STRINGHAM,
Senior Flag-Officer Blockading Squadron.

Lieutenant Commanding ENOCH G. PARROTT,
U. S. Brig Perry.

Order of Flag-Officer Stringham, U. S. Navy, commanding Atlantic Blockading Squadron, to Lieutenant Parrott, U. S. Navy, commanding U. S. brig Perry, regarding provisions and water for his vessel.

U. S. S. MINNESOTA,
Hampton Roads, May 18, 1861.

SIR: After cruising off the harbor of Fernandina until you get nearly out of provisions and water and you find no opportunity to supply yourself there, you can return to this place to obtain supplies or to Key West. I desire you to remain as long as possible on your cruising ground, and if there is any way of obtaining supplies of wood and water there, you will do so.

You will take all means in your power to make known the establishment of the blockade. If you have opportunity to communicate with me from time to time, please do so.

Respectfully, your obedient servant,

S. H. STRINGHAM,
Senior Flag-Officer Blockading Squadron.

Lieutenant Commanding ENOCH G. PARROTT,
U. S. Brig Perry.

Instructions from the Secretary of the Navy to Flag-Officer Stringham U. S. Navy, commanding Atlantic Blockading Squadron, regarding matters pertaining to his command.

NAVY DEPARTMENT, *May 18, 1861.*

SIR: Your letters of the 15th and 17th instant have been received.

Protection to certain citizens in the insurgent States has been from time to time enjoined by the President. In relation to the disposition of the persons whom you may capture, much must from the necessity of the case be submitted to your own good judgment, in which the Department has full confidence.

Perhaps Baltimore, although the nearest port, may not be the best to which to send the vessels that fall into your hands.

There will doubtless be many cases involving new questions that you may find it difficult to decide, but the courts of admiralty must dispose of them, having the facts submitted. It is desirable that a rigid and efficient blockade should be enforced at every point committed to your jurisdiction at the earliest possible moment. The Department has decided to purchase the steam tug *Yankee*, now employed in and about Hampton Roads. The officers, crew, and engineers now serving on board are to continue and will be paid by her present owners up to the 25th of this month, inclusive, when you will make such temporary

appointments for the *Yankee* as she may require. The conditions stated in the copy of instructions sent to you on the 16th instant refer rather to the large purchased and chartered vessels. Such as the *Yankee* will not require so many officers, and it is left to your discretion to arrange them.

It is proposed by the owners of certain bay steamers to run their boats between Baltimore and Fortress Monroe, carrying the mail and affording fresh supplies, provided, in your opinion, the strict requirements of the blockade are not interfered with. You may permit this arrangement, giving the necessary orders to the various commanders not to interfere with the vessels. All the boats and steamers armed in the Chesapeake are under your command, and are to be disposed of so as best to accomplish the objects intended.

Major-General Butler, with a large force, will be ordered to Hampton Roads, and you will communicate and cooperate with him.

I am, respectfully, your obedient servant,

GIDEON WELLES.

Flag-Officer S. H. STRINGHAM,
Comdg. Atlantic Blockading Squadron, Hampton Roads, Virginia.

Order of the Secretary of the Navy to Flag-Officer Stringham, U. S. Navy, commanding Atlantic Blockading Squadron, regarding cargo of schooner H. N. Farnham.

NAVY DEPARTMENT, *May 18, 1861.*

SIR: Herewith you will receive a copy of a letter which was transmitted to the Secretary of the Treasury and forwarded by him to the Secretary of State, who has communicated the same to this Department with a recommendation that "in view of the facts and circumstances as represented in the documents, the commander of the blockading squadron in that quarter be instructed to allow the property to leave Norfolk on its way to its original destination."

In pursuance of this recommendation you will permit Mr. Albert Adams, the authorized agent of the parties, to pass the property specified.

I am, respectfully, your obedient servant,

[GIDEON WELLES.]

Flag-Officer S. H. STRINGHAM,
Commanding Atlantic Blockading Squadron, Hampton Roads.

[Enclosure No. 1.]

CUSTOM-HOUSE, COLLECTOR'S OFFICE,
Boston, May 14, 1861.

SIR: Albert Adams, esq., the bearer of this letter, is on his way to Norfolk, Va., for the purpose of obtaining and sending forward a part of the cargo of schooner *H. N. Farnham*, heretofore unlawfully detained at that port, but which is now ready to be given up. He desires permission to export it thence to this or some other Northern port, and such permission I trust you will give him.

Mr. Adams will present to you a statement of this case drawn up by John S. Tyler, esq., of this city, which I have examined and which I I am satisfied is perfectly correct. The parties to whom the property

is consigned are well-known merchants of this city, and the nature of most of the property is such that unless it comes forward very soon the result will be nearly or quite a total loss.

Mr. Adams himself is a loyal man and entirely reliable.

Very respectfully, your obedient servant,

J. Z. GOODRICH,
Collector.

Hon. S. P. CHASE,
Secretary of the Treasury, Washington.

[Enclosure No. 2.]

BOSTON, *May 14, 1861.*

SIR: I have the honor to represent to you, in behalf of the owners and master of the schooner *H. N. Farham*, that said vessel [sailed] from Wilmington, in the State of North Carolina, on or about the 29th of March, 1861, with a cargo of cotton, pitch, spirits turpentine, lumber, and peanuts, bound for this port; that on the 2d of April following she sustained damages in gales of wind, which caused her to leak and made it necessary to put into port for repairs; that she did put into the port of Norfolk, and there discharge her whole cargo and undergo repairs; that after the repairs were made part of the cargo was taken in, but before the lading was completed the vessel was forcibly seized by persons claiming to act under the authority of the State of Virginia, and holes bored in her bottom for the purpose of sinking her in the channel way; that this intention was abandoned and the vessel restored to the master, who immediately left Norfolk with that part of the cargo then on board, and arrived at this port the 28th of April ultimo.

On discharging the cargo and comparing the quantity delivered with the quantity shipped, it appears that the following-described merchandise was left at Norfolk, viz:

One hundred and eighty-eight barrels of spirits turpentine, consigned to Frederic Kidder & Co.; 50 barrels of spirits turpentine, consigned to Thomas Simmons & Co.; 3 barrels of spirits turpentine, consigned to Stimson, Valentine & Co.; 59 barrels spirits turpentine, consigned to Charles Smith; 77 barrels spirits turpentine and 49 bales cotton, consigned to H. C. Thacker; 53 bags peanuts, consigned to P. G. Munro; 35,059 feet lumber consigned to Edward D. Peters & Co.

All of which said property is now at Norfolk, and the parties concerned therein propose to send Albert Adams, esq., to Norfolk, with instructions to obtain said property and reship the same.

Now, the parties concerned, in view of the disturbed condition of affairs, deem it important to obtain from the Government of the United States special instructions to the officers at and near Norfolk that said cargo be permitted to pass over to Fort Monroe and by water to some Northern port or place, and to this end they beg that you will furnish Mr. Adams a letter of introduction to the Secretary of the Treasury, that he may procure such instructions as may be deemed needful and expedient.

Respectfully, your obedient servant,

JOHN S. TYLER.

Hon. J. Z. GOODRICH,
Collector of Boston.

Engagements of the U. S. steamers Monticello and Thomas Freeborn with the Confederate battery at Sewell's Point, Va., May 18 and 19, 1861.

Report of Flag-Officer Stringham, U. S. Navy, commanding Atlantic Blockading Squadron.

U. S. S. MINNESOTA,
Hampton Roads, May 19, 1861.

SIR: I have the honor to report to the Department that Captain J. H. Ward arrived here yesterday in company with two small schooners and a very small steam tug, in addition to the one commanded by himself. About the time of his arrival I heard and saw firing from Captain Eagle's vessel, the *Star* [*Monticello*], now actively blockading the mouths of James and Elizabeth rivers. I immediately ordered Captain Ward to go up to him. He found a battery being erected by the rebels from Norfolk, which, with the aid of the *Star* [*Monticello*], was partially destroyed.

Captain Eagle is very vigilant in the performance of his duty on that station.

I yesterday had the honor of a visit from Senators Wade, Chandler, and Morrill, with some gentlemen traveling in their company. They desiring to return direct to Washington, I ordered Captain Ward to convey them in his steamer, with further orders to look in at the mouths of the Virginia rivers on his way up and down, and to return to this place as soon as possible. I hope this will meet your approval.

This afternoon (Sunday), about 5:30 p. m., Captain Eagle, in the *Star* [*Monticello*], again opened fire upon the battery referred to above with a heavy gun and a small one (he only carries two), and fired with promptness and spirit until he exhausted his ammunition, when he returned to this ship.

I shall supply him with ammunition, and in the morning he will proceed to his original blockading station.

I have the honor to enclose to the Department a copy of the report of Captain Henry Eagle, commanding U. S. S. *Star* [*Monticello*].

Respectfully, your obedient servant,

S. H. STRINGHAM,
Senior Flag-Officer Blockading Squadron.

Hon. GIDEON WELLES,
Secretary of Navy.

[Enclosure.]

U. S. S. STAR [MONTICELLO], *May 19, 1861.*

SIR: From the time I reported to you yesterday I kept a strict watch on the movements of the enemy in and about the Sewell's Point battery. Several noises were heard during the night, but not distinct enough for me to trace them. At 5:30 p. m. I heard distinct blows, as if from an ax, securing timber platforms for gun carriages inside of the embrasures, and immediately I ordered a shot to be fired over them. The rebels immediately hoisted a white flag, with some design on it, and fired a shot that cut the fore-spencer vangs near the gaff. I immediately went to quarters and returned their fire, which was continued by them. I expended 15 stand of grape, 12 10-inch shot, 32 10-inch shell, 10 shell for 32-pounders, and 45 32-pound shot, making a total of 114 shots, which I think did some execution among the rebels. I only desisted for want of ammunition, having only 5 8-pound charges remaining for the pivot gun. I regret that want of ammunition compelled me to retire, as I am satisfied I could have silenced the battery

in a short time. I can not too highly praise the courage and patriotism of the officers and men under my command. They acted nobly and with great coolness, as the repeated firings, as above, will show. The action continued from 5:30 p. m. to 6:45 p. m., a duration of one hour and fifteen minutes. The battery is masked, thirteen embrasures having been erected behind a sand bank. The rebels had three rifled cannon and fired several volleys of minie balls, which struck the ship. The ship was struck five times by rifled cannon shot in the hull and upper works. The damage can be repaired by ourselves. I herewith enclose the report of the medical officer of this ship, by which you will perceive that two men were slightly wounded during the action.

I can not close this communication without calling the attention of the flag-officer to the valuable services of Lieutenant Daniel L. Braine, who had charge of our pivot, and who, during the whole action, displayed great coolness and skill in its management.

Very respectfully, your obedient servant,

HENRY EAGLE,
Captain, and Commanding U. S. S. Star [*Monticello*].

Flag-Officer S. H. STRINGHAM,
Commanding Home Squadron, Frigate Minnesota.

Report of Lieutenant Braine, U. S. Navy, U. S. S. Monticello, regarding duty performed by him on board the U. S. S. Thomas Freeborn.

U. S. S. MONTICELLO,
Hampton Roads, May 22, 1861.

SIR: In compliance with your request that I render you a statement in writing of the part which the steamer *Thomas Freeborn* took in firing into an unfinished battery above Sewell's Point, I have to state that after we had fired a number of times from the U. S. S. *Monticello*, the steamer *Thomas Freeborn* came along and Commander Ward came on board. I went with him in his boat to the *Thomas Freeborn*, and took the vessel at his request in as close to the earthworks as I thought necessary. Commander Ward then fired a number of shot from his forward gun, a heavy 32-pounder, which did some slight injury to the embrasures. There were some twelve or fourteen shots fired in all, and the *Thomas Freeborn* then withdrew from her position and returned to Hampton Roads. While on board the *Freeborn*, I did not see any armed men in the battery nor any pieces of ordnance.

I am, respectfully, your obedient servant,

D. L. BRAINE,
Lieutenant, Commanding.

Captain HENRY EAGLE, U. S. Navy.

Report of commandant navy yard, Washington, giving results of examination of fragments of shell extracted from the U. S. S. Monticello.

COMMANDANT'S OFFICE, NAVY YARD,
Washington, May 30, 1861.

SIR: I have just examined the fragments of a shell from the rifled gun at Sewell's Point that lodged in the *Monticello*, late *Star*, from which I find the following:

First. The gun has the bore of a 3-pounder and the shell weighed probably 5 to 7 pounds.

Second. The shell is made of the kind patented by Dr. Reed, of Alabama, and now owned principally by Mr. Parrott, of Cold Spring.

Third. I have tried this kind to some extent, and know that they are not very accurate, though useful in some particular cases.

Fourth. The sand bank in front of these guns alone prevented the 10-inch shells of the *Monticello* (distant half a mile) from entirely destroying the battery.

Fifth. The *Monticello* was in no material danger from shells so small, as regards her hull, but they would have been serious to her boilers.

I have the honor to be, very respectfully, your obedient servant,

JNO. A. DAHLGREN,
Commandant.

Hon. GIDEON WELLES,
Secretary of the Navy.

Reports of Brigadier-General Walter Gwynn, C. S. Army, commanding at Norfolk.

NORFOLK, VA., *May 20, 1861.*

The enemy fired on the unfinished battery at Sewell's Point on the 18th, but did no damage. There were at that time no guns mounted or nearer than Norfolk. I sent forward three guns immediately and two of the rifled cannon. Got them in position at 5 p. m. on the 19th. Soon after the enemy opened fire, which was returned and kept up one and a half hours, when the vessel from which the guns were fired withdrew. A fuller report will be made to-morrow. Just returned from Sewell's Point. Reports in from the pickets at all points.

No immediate attack apprehended. Troops thrown forward and in position. Confident of making defense good. I am strengthening to some extent my position. Want 600 laborers, and am reenforcing the batteries, which takes off so many men that additional troops are required.

WALTER GWYNN.

R. S. GARNETT,
Adjutant-General Virginia Forces.

HEADQUARTERS FORCES OF VIRGINIA AROUND NORFOLK,
May 20, 1861.

SIR: I have the honor to inform you that late in the evening of the 18th instant I received intelligence of an attack made by the enemy's steamer *Monticello* on the unfinished works at Sewell's Point. This battery was not sufficiently advanced at the time to receive its armament and garrison. The *Monticello* carried three guns, one of which was a heavy 10-inch Dahlgren. With these she kept up a constant fire with solid shot and shell for more than an hour, when a steam tug from Old Point carrying one gun came to her aid, and the two vessels continued the cannonade until the close of the day without any serious injury to the works. The tug then returned to Old Point, and the *Monticello* moored, with broadside on, with the intention, apparently, of continuing the attack, in order to demolish the works or prevent their progress. Early on the morning of the 19th I hurried on the guns and equipment, and repaired to Sewell's Point, to expedite the works for their reception, and by 5 p. m. succeeded in getting three 32-pounders and two small rifled guns into position, while detachments of

infantry and artillery, ordered from neighboring posts, occupied the battery and contiguous points. During all this time the *Monticello*, apparently not suspecting the operations going forward, was engaged in preparing for another effort, by calculating the range and distance and adjusting her guns to suit. With instructions to Captain Colquitt, of Georgia, to whom I gave command of all the forces and guns at the post, to continue the preparations, reserving his fire until the enemy renewed the cannonade, I returned to Norfolk. At 5:30 o'clock the *Monticello* again opened fire from all her guns, and with much greater precision than on the preceding day. It was instantly returned and with such effect that she was driven off and returned to Old Point. The engagement continued for an hour and a half without intermission on either side, and, though the enemy's fire was well directed, one shell bursting within an embrasure and several others directly over the battery, while solid shot repeatedly passed through the embrasures and struck the crest and sides of the merlons, hurling masses of earth from the outside among the gunners, I am happy to inform you that no casualty of moment occurred to the troops, nor was material injury done to the battery. What damage or loss was sustained by the enemy I was not able to discover, but his retreat indicated that our fire had become too warm for further endurance. As early as I received information of the second attack and repulse, I ordered forward more troops and hastened during the night to Sewell's Point to make such other dispositions as might be necessary to defend the post against any further and more formidable assaults which the enemy's large naval and military forces at Old Point would enable him to make.

I can not close this brief account of the engagement without expressing my admiration of the enthusiasm and bravery manifested by the troops. Where officers and men displayed so much merit it would be invidious to discriminate, and I therefore refer you to the accompanying report of Captain Colquitt for further particulars. His position, as commanding officer of the post, gave him an opportunity of displaying the qualities which adorn the soldier, and the general appreciation of his gallantry and merit by those under his command enable me to commend him most warmly to your consideration.

In conclusion, I would state that, in consequence of the want of a Virginia or Confederate flag for the occasion, the flag of Georgia, belonging to Captain Colquitt's company, was planted on the ramparts during the engagement, and, while the hottest fire was prevailing, two members of his company, whose names I will forward you when reported to me as deserving particular notice, fearlessly passed to the outside of the battery and deliberately removed the sand and other obstructions to the range of one of the guns while shot and shell were striking all about them.

I am, general, very respectfully, your obedient servant,

WALTER GWYNN.

Major-General LEE,
Commanding Forces of Virginia, Richmond, Va.

Report of Captain Peyton H. Colquitt, C. S. Army, commanding at Sewell's Point.

SEWELL'S POINT, VA., *May 19, 1861.*

SIR: I have the honor to report to you an engagement this evening between the Confederate troops, consisting of the City Light Guards,

Columbus, Ga.; Woodis Rifles, Captain Lamb; detachment of the Norfolk Juniors, under Lieutenant Holmes; detachment of Light Artillery Blues, under Lieutenant Nash, all under my command, and the steamer *Monticello* and Federal steam tug, which lasted for one hour and a half, in which nobody was hurt on our side. The enemy fired with great accuracy, several balls passing through the embrasures of the fort, one striking a 32-pounder within the battery, and one shell bursting in the fort. From three to five shots from our battery took effect, we think; others struck around the steamer. The troops acted with great bravery, and I had to restrain them in their enthusiasm. The flag of Georgia was hoisted over the fort in the absence of the Confederate flag. Our firing was less frequent than that of the enemy, as our ammunition was scarce; only two rounds left after the engagement. Your aids, Major William E. Taylor, R. R. Collier, and Colonel Thomas Newton, were present and aided in the struggle.

I have the honor to be, your obedient servant,

PEYTON H. COLQUITT.

Major-General GWYNN.
Commanding Forces, Norfolk Harbor.

P. S.—Two members of the City Light Guards (Georgia) dug away the sand in front of one of the portholes during the hottest of the fire.

Report of Flag-Officer Stringham, U. S. Navy, commanding Atlantic Blockading Squadron, suggesting service for U. S. sloop Cumberland.

U. S. S. MINNESOTA,
Hampton Roads, May 19, 1861.

SIR: In forwarding Flag-Officer Pendergrast's communication* of May 18, 1861, to the Department, I take the liberty of making a single suggestion in reference to the disposition of the *Cumberland*, growing out of the fact of the certain presence of large steamers at Charleston, as per communication containing list of vessels as furnished by Mr. H. Loring, of Boston, to the Department.

I respectfully suggest, if the Department sees fit to comply with Commodore Pendergrast's suggestions of taking up his quarters at Fortress Monroe (to which I see no objection), that the *Cumberland*, instead of going immediately to New York, be first sent off Charleston (where only the small steamer *Harriet Lane* now is) to cruise until she can be relieved by one of the large vessels daily expected to report here for service, after which the *Cumberland* might proceed to New York.

I inferred from your communication of May 4, 1861, that I might employ the *Cumberland* on blockading duty, but only at this port, and therefore my suggestion.

Very respectfully, your obedient servant,

S. H. STRINGHAM,
Senior Flag-Officer Blockading Squadron.

Hon. GIDEON WELLES,
Secretary of Navy.

---

* See p. 640.

Report of Flag-Officer Stringham, U. S. Navy, commanding Atlantic Blockading Squadron, suggesting immediate occupation of Cape Henry, Virginia, by troops.

U. S. S. MINNESOTA,
Hampton Roads, May 19, 1861.

SIR: I take the liberty of suggesting to the Department the very great importance of keeping perfectly free and clear the navigation of the Chesapeake, and of taking means immediately to prevent any occupation of Cape Henry by the rebels of Virginia.

If they choose to occupy the cape with guns, they can prevent the ingress of vessels of large size or at least do great damage.

I would respectfully suggest the immediate occupation of that point by a force of at least a thousand men and some heavy guns. With boards the soldiers could easily erect quarters ample and comfortable for the present, and that point once occupied could be readily defended, and if necessary supported by the fleet.

Respectfully, your obedient servant,

S. H. STRINGHAM,
Senior Flag-Officer Blockading Squadron.

Hon. GIDEON WELLES,
Secretary of Navy.

Capture of the ship A. B. Thompson, by the C. S. S. Lady Davis, off the coast of South Carolina, May 19, 1861.

Letter from the Secretary of the Navy to Flag-Officer Stringham, U. S. Navy, commanding Atlantic Blockading Squadron, transmitting request of the owner of ship A. B. Thompson.

NAVY DEPARTMENT, *June 27, 1861.*

SIR: I herewith enclose a copy of a letter that has been referred to the Department by the Honorable William [P.] Fessenden, in relation to the ship *A. B. Thompson*, of Brunswick, Me., which was captured near Savannah by the rebel steamer *Lady Davis* and taken to Beaufort, S. C., on the 21st ultimo.

I am, respectfully, your obedient servant,

GIDEON WELLES.

Flag-Officer S. H. STRINGHAM,
Comdg. Atlantic Blockading Squadron, Hampton Roads, Virginia.

[Enclosure.]

PORTLAND, *June 22, 1861.*

DEAR SIR: On the 21st ultimo, my ship *A. B. Thompson*, of Brunswick, Me., of 980 tons, was taken, after leaving Savannah on the day previous, off Portugal Bay, by steamer *Lady Davis*, Captain Pelot, and taken to Beaufort, S. C., as we learn from our correspondent at Savannah, Ga. I have not received any information from the captain since she left Savannah.

She is rather a fast sailer; she will make the rebels a good sloop of war. She can be converted into a steamer and would make a formidable privateer. Please represent this to our Government at Washington. She is worth about $30,000 to me, or us. They will confer a great favor on us if they will send a steamer, take her out, and tow her to sea. We presume her whole crew are on board.

I have the honor to be, most respectfully, your obedient servant,

DANIEL HOOD.

Hon. WILLIAM [P.] FESSENDEN.

Letter from R. C. Gilchrist, C. S. prize commissioner, to the judge of the C. S. district court, transmitting papers in the case of prize ship A. B. Thompson.

CONFEDERATE STATES OF AMERICA,
South Carolina District:

I would respectfully report to your honor that Lieutenant Pelot, of the C. S. S. *Lady Davis*, appeared before me on the 22d day of May, 1861, and delivered to me all the papers of the ship *A. B. Thompson*, taken as prize by the said steamer *Lady Davis*.

The said papers and an inventory of the same are herewith filed. On the 24th of May I went to Beaufort, where the said ship was moored, to take possession of her as prize commissioner. I found her safely anchored under the guns of the *Lady Davis* and guarded every night by a detachment of nine soldiers from the fort. I immediately proceeded to examine the officers and crew on the standing interrogatories propounded by the court, and I herewith file the full and explicit replies given by the captain, the first and second mates, and two of the most intelligent of the crew, the largest proportion of whom were foreigners, unable to speak our language.

I made a thorough examination of the whole vessel. There was no cargo on board. Hereto annexed is an inventory of all I could find. I placed a seal on Marryat's signal flags, but told the captain of the prize ship that he and his crew could use the ship's stores so long as they remained by the vessel.

For the purpose of securing the ship I had all the sails unbent and stowed away in the hold; the running tackle was likewise taken down, so that the vessel is completely dismantled. The officers of the *Lady Davis* still remain in charge of the ship and should the steamer be ordered off before the ship is more completely in the custody of the court, a guard will be detailed from the fort.

The officers and crew of the prize ship still remain on board.

All of which is respectfully reported.

R. C. GILCHRIST,
C. S. Prize Commissioner.

Hon. A. G. MAGRATH,
Judge, Confederate States Court.

[Enclosures.]

Examination in preparatorio of officers and crew of prize ship A. B. Thompson, taken by the C. S. S. Lady Davis.

CONFEDERATE STATES OF AMERICA,
South Carolina District:

I would respectfully report the following testimony taken upon the standing interrogatories.

R. C. GILCHRIST,
Prize Commissioner, C. S. A.

Hon. A. G. MAGRATH,
Judge of the Confederate States Court for South Carolina District.

Examination of Captain HUSSEY:

To the first interrogatory: I was born in the town of Greene, in the State of Maine. I live at West Woodstock, Conn.; have lived there five years. I am a citizen of the State of Connecticut.

Second interrogatory: I was present at the time of the taking of the ship *A. B. Thompson*, and was in command of her.

Third interrogatory: The ship was about 10 miles east of Savannah bar, as nearly as I can judge, at the time she was taken. She was taken last Sunday, the 19th of May, 1861, about 11 o'clock a. m. She was carried into Beaufort Harbor. The reason given me, was that I did not have a proper clearance from Savannah, and on that account she was seized. The ship sailed under the American or United States colors. I had no other national colors on board, but had some Marryat's signal colors and a flag with the ship's name on it. I had those signal flags to communicate with other vessels or with the shore in case anything was wanted. No resistance was made to the seizure. We were taken by the steamer *Lady Davis*.

Fourth interrogatory: F. A. Hussey is the name of the commander of this ship. I am the commander. The owners appointed me. Captain James M. Small, my predecessor, delivered to me the possession of the ship. I took possession of her at Antwerp, Belgium, on the 18th day of March, 1861. I live, as I have before stated, at West Woodstock, Conn.; was born in the town of Greene, Me., and am a citizen of the United States.

Fifth interrogatory: The tonnage of my ship is 980 tons, or thereabouts. There were twenty-three, counting mariners and officers, on board. The mariners were principally foreigners—some Irish, some English, and some Dutch. There was one American. I can't say positively whether there were any more. They were shipped in Antwerp, by two shipping masters whom I employed for that purpose, somewhere between the 20th and 25th of March, 1861.

Sixth interrogatory: Neither I nor any of the officers or mariners had or have any part, share, or interest in either the vessel or cargo. She had no cargo, only ballast. I belonged to the vessel at the time of her seizure, was master of her; I have only known this ship from the 18th of March last; I never saw her before I took command of her.

Seventh interrogatory: The ship's name is *A. B. Thompson;* she has been called by this name since she was first registered, some eight years ago. She has never had any other name, so far as I know. I left Antwerp on the 27th day of March and sailed directly for Savannah, Ga. I arrived in Savannah last Friday, the 17th of May. My voyage was to commence at Antwerp and then sail to Savannah, where I was to receive further orders. I expected to receive my orders from the pilot. The pilot told me that he was not allowed to deliver letters to ships outside. I therefore left my ship off Tybee light and went up to Savannah, where I received orders from the owners of the ship to take her to Hampton Roads; but hearing that harbor was blockaded, I concluded to take the ship to New York. I left Savannah with the ship about 9 o'clock Sunday morning, and had just got sail on my ship when I was taken. The ship was in ballast about 400 tons, sand and stone; she had no cargo, and had none from the time of leaving Antwerp.

Eighth interrogatory: The owners are Daniel Hood, of Portland; A. D. Thompson and George Mustard and others, of Brunswick [Me.]. The names of the owners are found on the register. I know it from the fact of their engaging me to take charge of the ship and from seeing their names on the register. They are citizens of the State of Maine.

Ninth and tenth interrogatories: There was no lading on board the vessel; nothing but ballast, which belongs to the ship.

Eleventh interrogatory: There was no charter party signed for the voyage.

Twelfth interrogatory: The only papers on board the vessel were the register, crew lists, manifest, clearance, and log book; these were all

delivered to the commander of the steamer *Lady Davis*. There are some old papers now on board relating to former voyages.

Thirteenth interrogatory: There were no passengers on board the ship.

Fourteenth interrogatory: The ship was steering for New York at the time she was pursued and taken. Her course was not altered.

Fifteenth interrogatory: The ship did not have any guns mounted.

Sixteenth interrogatory: I have already fully answered to the best of my knowledge and belief.

F. A. HUSSEY.

Sworn to this 24th May, 1861.

R. C. GILCHRIST,
C. S. Commissioner.

—

CONFEDERATE STATES OF AMERICA,
South Carolina District, Port of Beaufort:

Before me personally appeared Benjamin R. Bythewood, collector of the port of Beaufort, who upon oath says, that under the notification made to him of the prize ship *A. B. Thompson*, now in the said port, by R. C. Gilchrist, commissioner, and the order of his honor Judge Magrath, of the Confederate court, he has delivered all persons found on board the ship *A. B. Thompson* into the custody of the military officer of the Confederate States in command at this port; and further does certify that he has this day posted a copy of the monition, dated the 3d day of June, A. D. 1861, upon the mainmast of the prize ship *A. B. Thompson*, now lying in this port.

[SEAL.] BENJ. R. BYTHEWOOD,
Collector.

Sworn before me this 8th day of June, A. D. 1861.

WM. J. DE TREVILLE,
Magistrate.

—

OFFICE ASSISTANT TREASURER OF CONFEDERATE STATES,
Charleston, November 6, 1861.

SIR: Mr. H. Y. Gray, district clerk, has deposited with me to the credit of the treasurer, the proceeds of the prize ship *A. B. Thompson*, amounting to $14,350.41.

Very respectfully, your obedient servant,

B. C. PRESSLEY,
Assistant Treasurer.

Hon. C. G. MEMMINGER,
Secretary of the Treasury, Richmond, Va.

Petition of Stephen Elliott et al., stating the grounds of their claim to share in the prize ship A. B. Thompson.

[JUNE 24, 1861.]

THE CONFEDERATE STATES OF AMERICA,
District of South Carolina:

The petition of Stephen Elliott, jr., B. W. Slowman, R. M. Fuller, H. C. Morgan, J. W. Bold, H. E. [C. M.?] Bold, R. M. Fuller, sr., H. M. Fuller, H. [M.] Zealy, [Philip] P. Murray, S. E. Blount, S. E. Barnwell, M. W.

Fripp, J. S. Gibbes, William Thompson, Thomas B. Catherwood, C[harles H.] Willcox, and J. E. Chaplin showeth unto your honor that a libel has been exhibited and filed in your honorable court against the ship *A. B. Thompson*, captured on the high seas by the Confederate steamer *Lady Davis*, Lieutenant Pelot commanding, and a monition has been issued citing all who have or pretend to have any right, title, claim, interest, property, or demand whatsoever in, to, or out of the said ship, to be and appear before your honorable court on Monday, the 24th day of June, anno Domini 1861.

And the petition further showeth that the said Stephen Elliott, jr., being a captain, the said B. W. Slowman and R. M. Fuller, jr., being sergeants, and the rest of your petitioners being privates in the Beaufort Artillery, a company in the military service of the State of South Carolina, and stationed in garrison at Fort Littleton, a military post near Beaufort in the said State, do claim an interest in the said captured ship *A. B. Thompson*, as joint captors thereof, under the following circumstances, to wit: That on the morning of the 18th of May, A. D. 1861, Lieutenant Pelot, commanding the *Lady Davis*, called upon the said Captain Elliott and requested him to bring on board of the *Lady Davis* a detachment of his men and accompany him outside of the bar, to which request Captain Elliott assented, but that the weather proving unfavorable the expedition was abandoned and Captain Elliott and his detachment landed at the fort with the understanding that their services would be required the following day. That on the following day, the 19th of May, A. D. 1861, Lieutenant Pelot called upon Captain Elliott and took him, two sergeants, and sixteen privates, being your petitioners, completely armed, and also took Captain Elliott's boat in tow and proceeded across Port Royal bar. About 8 miles beyond the bar, the *Lady Davis* hailed the ship *A. B. Thompson*, and at the suggestion of Captain Elliott, Lieutenant Pelot ordered her to be boarded. Lieutenant Stockton, of the *Lady Davis*, then boarded the ship from Captain Elliott's boat, accompanied by Captain Elliott and one of the detachment from Fort Littleton, who was stationed at the signal halyards to cut them in case of foul play. After some conversation with the captain the boarding party returned to the *Lady Davis* and Lieutenant Stockton went on board, soon after which Lieutenant Pelot, coming to the side of his vessel, asked Captain Elliott whether he would take the *Thompson* to Charleston, to which Captain Elliott replied that he deemed such an attempt injudicious in view of the blockade then existing at that port. Lieutenant Pelot then asked whether Captain Elliott would take the *Thompson* to Port Royal, to which he consented. Lieutenant Stockton and Captain Elliott then returned to the ship *A. B. Thompson*, taking with them Privates R. M. Fuller, J. E. Chaplin, and M. W. Fripp, who guarded the hatchway, while the master of the ship was sent to the *Lady Davis* and the boat then returned bringing Sergeant B. W. Slowman, Privates H. E. [C. M.?] Bold, J. W. Bold, H. C. Morgan, H. M. Fuller, H. [M.] Zealy, C. [H.] Willcox, and three or four of the crew of the *Lady Davis*. Lieutenant Stockton then placed the vessel under the command of Captain Elliott, who gave the courses to the helmsman and the necessary orders. After passing the shoals at the mouth of the harbor, the *Lady Davis* hailed the ship and directed it to follow in her wake, but finding that this direction brought the ship into shallow water, where she struck and ran great danger of finally stranding, Captain Elliott changed her course and brought her to Beaufort.

Wherefore your petitioners pray that your honor will appoint a day when they may intervene in behalf of their interests and exhibit to your honor the proofs thereof.

WM. HENRY TRESCOT,
Proctor for Petitioners.

Hon. A. G. MAGRATH,
Judge of the District Court.

Testimony of Lieutenant Edward C. Stockton.

CONFEDERATE STATES OF AMERICA,
South Carolina District, in admiralty:

CONFEDERATE STATES OF AMERICA
v.
SHIP A. B. THOMPSON.

Lieutenant EDWARD C. STOCKTON, a witness produced and examined in behalf of the claimants, Stephen Elliott, jr., and others, being duly sworn deposes:

That he is now a lieutenant in the Marine Corps of the Confederate States, but that he held a commission as lieutenant in the Navy only from the State of South Carolina at the time of the capture of the *Thompson;* that deponent was in command of the steamer *Lady Davis* while she was owned by the State of South Carolina, and under the orders of the governor of South Carolina as part of the coast police of the State, until about a week before the capture, when Lieutenant Thomas P. Pelot, of the C. S. Navy, took command of her, by the direction of the governor. Deponent came to Charleston on Friday, the 17th of May, and had an interview with Commodore Tattnall, C. S. Navy, in which he learned that the *Lady Davis* was under the orders of Commodore Tattnall as a part of the C. S. Navy, and that Lieutenant Pelot had been ordered by the Secretary of the Navy to the *Lady Davis*, and that he, deponent, then had an interview with the governor, who informed deponent that he had nothing to do with the *Lady Davis*, as she had been turned over to the Confederate States, but that, as orders had been sent to Lieutenant Pelot to come to Charleston, he desired deponent to keep command of the *Lady Davis* until Pelot could return to her. Deponent returned to Beaufort on Saturday night and found Lieutenant Pelot in command of the *Lady Davis*. The next day, Sunday, 19th May, the *Lady Davis* went out in search of the U. S. brig *Perry*, and while cruising about fell in with and captured the *A. B. Thompson*. Deponent has read carefully the petition and claim of Captain Stephen Elliott, jr., and admits that the facts stated by him which are within deponent's knowledge are truly and accurately set forth, except that when they went on board the *Thompson*, Captain Elliott did not take command of her. Deponent was in command, and gave the necessary orders for sailing the ship, but Captain Elliott acted as pilot and directed the courses of the vessel, and by his familiarity with the bar was of most essential service in bringing the ship in safely; in fact, but for Captain Elliott's knowledge the ship would probably have gone ashore, as there was no one else on board who knew the bar. The names stated in the petition are not known to deponent, but deponent requested Captain Elliott to furnish him with a list of his men, as deponent considered that they would be entitled to share in the prize money, and deponent has no doubt that the list is correct.

Deponent also thinks that the statement in the petition with regard to the conversation between Lieutenant Pelot and Captain Elliott on the Saturday preceding the capture is correct, from what he has heard from Lieutenant Pelot.

Deponent further states that there were on board of the *Lady Davis* at the time of the capture of the *Thompson*, the following officers: Lieutenant Thomas P. Pelot, C. S. Navy, commanding; deponent, lieutenant in South Carolina Navy, second in command; James Pelot, assistant surgeon, of State of South Carolina; Midshipmen Thomas and Walker, also of the State service; also two engineers, Geddes and Yates, appointed by the State; one ship's steward, three quartermasters, and no extra petty officers, and, as well as deponent remembers, twenty seamen, firemen, and coal heavers; but this will appear by the log book of the *Lady Davis*.

Deponent further says that the *Lady Davis* is about 250 tons burden, and the *Thompson* is about 980 tons, and the number of the crew on the *Thompson* was about twenty-three.

Deponent further states that in his opinion the soldiers under the command of Captain Elliott did duty on this occasion as marines.

E. C. STOCKTON,
Lieutenant, C. S. Marines.

Sworn to before me this 29th June, 1861.

R. C. GILCHRIST,
C. S. Commissioner.

Deponent wishes to add to his testimony written above that Captain Elliott went on the steamer *Lady Davis* at the invitation of Lieutenant Pelot, and it was not at the request of Lieutenant Pelot.

E. C. STOCKTON,
C. S. Marines.

Testimony of Lieutenant Thomas P. Pelot.

Lieutenant THOMAS P. PELOT, C. [S.] Navy, being duly sworn, says:

Examined by Mr. TRESCOT:

I was in command of the steamer *Lady Davis* at the time of the capture of the ship *A. B. Thompson*. The crew consisted of twenty-three men, myself, and the officers who were with me. Lieutenant Stockton, Surgeon Pelot, Midshipmen Walker and Thomas, Chief Engineer Geddes, Assistant Engineer Yates, Pilot Murray, were the officers. We likewise had Captain Elliott, of the Beaufort Volunteer Artillery, and about fifteen or twenty of his men. On Saturday, the 18th of May, I went to see Captain Elliott at his residence, and asked him to go on board the *Lady Davis* as a pilot, to which he agreed. On our way to the boat to embark he asked if I would allow some of his company to go on board, to which I consented, limiting the number to a dozen, and promised to call at the fort for them. On the same day, with these persons on board, we proceeded to the bar, but, in consequence of the threatening appearance of the weather, we returned and landed the members of the Beaufort Volunteers. Captain Elliott asked me to call on the following day, as I told him I was going out, and receive him and a part of his company on board, which in courtesy I accepted. On the following day (Sunday, the 19th) we proceeded over the bar. We saw the *A. B. Thompson* making sail in the offing, standing to the northward. We approached her, ordered her to show her colors and heave to. Ordered

Lieutenant Stockton to board her and examine her. Lieutenant Stockton returned and reported that the ship was the American ship *A. B. Thompson*, of Maine, cleared at the port of Savannah by the deputy collector. Ordered Lieutenant Stockton to take a prize crew from the men of the *Lady Davis* and take charge of her. Requested Captain Elliott to pilot the ship into Port Royal, which request he acceded to. Captain Elliott went on board the ship in the capacity of pilot at my request. When we took Captain Elliott and his men on board we took their boat in tow at the same time. When Lieutenant Stockton boarded the ship, I think he boarded her in Captain Elliott's boat, or rather the boat in which they came on board. When Lieutenant Stockton first went on board he was accompanied by Captain Elliott, but not at my request. I ordered Lieutenant Stockton to man the boat, but did not specify what men were to go on board. There were some of Captain Elliott's men in the boat. After Lieutenant Stockton returned to the *Lady Davis* and reported, I requested Captain Elliott to pilot the ship into Beaufort, but do not remember the details of the conversation. I had a pilot of my own on board, whom I retained to pilot the *Lady Davis*. Lieutenant Stockton then returned to the ship, taking Captain Elliott and some of his men with him. When Lieutenant Stockton returned, he sent the captain and officers of the *Thompson* and her papers back to the *Lady Davis* by my orders. The prize crew was then sent back to the ship. I detailed that crew (I think there were six), consisting of the men of the *Lady Davis*. Some of the men of Captain Elliott's company accompanied the prize crew; they asked my permission to do so, and I granted it, having no right to detain them. I think they were all armed. I know nothing of what took place on board of the ship after Lieutenant Stockton took charge of her. While we were going into port I ordered Lieutenant Stockton to give me a hawser to tow the ship, which I afterwards countermanded. I ordered Lieutenant Stockton to follow in our wake. I ordered Lieutenant Stockton to cross the bar under topsails. A portion of the way she followed in our wake. Lieutenant Stockton asked permission to bring the ship in without regard to my previous orders, as he had been advised to do so. The *Lady Davis* and prize went in company to the town of Beaufort. The prize crew remained on board the ship until sunset. Lieutenant Stockton came on shore about that time and said that he had left a party of Captain Elliott's men in charge of the ship. I requested Captain Elliott to retain a guard on board the vessel. They have been in charge of the ship until a few days ago. The twenty-three men on board the *Lady Davis* allowed me only six men to send on board the ship as a prize crew. When I invited Captain Elliott to go with me on the 18th, it was with the intention of attacking the *Perry*, an armed vessel of the U. S. Navy. The object of the expedition on the 19th was the same. I never had any conversation with Captain Elliott about a list of the men who accompanied him.

Cross-examined by Mr. MILES:

I took command of the *Lady Davis* on the 10th or 11th of May, by order of Governor Pickens. I then had my commission from the Confederate States. I had orders from Governor Pickens to report to Commodore Tattnall, who was in command of this division. I considered that the *Lady Davis* was then in the Confederate service. The engineer may have been in the Confederate service; none of the others were. The crew was reenlisted into the Confederate service the day after the

capture. The officers of the State were then dismissed between that and the 1st. The *Lady Davis* had a 24-pound howitzer and a rifle cannon; they both belonged to the State. The howitzer was turned over to the Confederate service; the rifle cannon still belongs to the State. The *Lady Davis* is now at Beaufort, under the command of Lieutenant Rutledge.

I considered the men of Captain Elliott's company as my guests. Captain Elliott was absolutely necessary to me, because I did not have my pilot, but the men were not necessary to me. I intended to fight the *Perry* at a long range with my rifle cannon. I had no idea of coming within range of her guns. I had no intention of boarding her, and marines would have been of no use to me. My pilot had returned the following day; I therefore did not ask Captain Elliott to go with me, but he asked me to call for him, which I agreed to do, and also to take some of his men. I did not need or desire their assistance; I gave no command to Captain Elliott or any of his men. Before the capture, Captain Elliott was on my boat as guest; after the capture he was on the prize as pilot. The men were the whole time as guests.

All my orders were given to Lieutenant Stockton and Midshipman Walker. Captain Elliott did not claim to me to participate in the prize money resulting from the capture either at the time or after the capture. I considered that he was entitled to remuneration for his services as pilot, but his men were entitled to nothing, unless Lieutenant Stockton had used any of them in the same capacity. The *Lady Davis* was 250 tons; the prize ship about 998 tons. After taking out the prize crew, I had men enough on board the *Davis* to perform all the necessary duties, and the men I put on board were sufficient, under the circumstances, to man the prize. The crew of the ship assisted in working her in; there was no resistance offered. I first knew of the claim of Captain Elliott through the publication in the Courier a few days ago. I received my orders from the Secretary of the Navy to go on board the *Lady Davis* on the 18th of May.

THOS. P. PELOT,
Lieutenant, C. S. Navy.

Sworn to before me this 3d July, 1861.

R. C. GILCHRIST,
C. S. Commissioner.

Testimony of William W. White.

WILLIAM W. WHITE being duly sworn, says:

Examined by Mr. TRESCOT:

I am clerk and bookkeeper in the State treasury of South Carolina. The payment of the Government of the Confederate States to the State of South Carolina for the steamer *Lady Davis* was made on the 7th of May, 1861, in a check for $32,000, which check passed through my hands.

WM. W. WHITE.

Sworn to before me this 3d July, 1861.

R. C. GILCHRIST,
C. S. Commissioner.

Testimony of Robert M. Fuller.

ROBERT M. FULLER, being duly sworn, says:

Examined by Mr. TRESCOT:

I am a member of the Beaufort Volunteer Artillery, now in the service of the Confederate States. In May last I was in the service of the State, and employed in garrison duty in Fort Littleton. I was one of the detachment of the company on board of the *Lady Davis*. The list of the company as read to me is a true list of the company composing such detachment, as far as I can remember. I went on board of the *Lady Davis* on Saturday; we all went on armed and took our own rations with us. We returned that same afternoon, and the next day the steamer returned for us and took us on board. I was not one of those who boarded the *Thompson* for the examination of her papers. I went the second trip of the boat when a transfer of her officers was made. The party on board the boat was composed of sailors who rowed the boat, but did not go on board the ship. Lieutenant Stockton, Captain Elliott, Mr. Fripp, Mr. Chaplin, and myself, and perhaps Midshipman Walker, went on board the ship. Regular posts were assigned to us; we were all stationed by the hatchway, armed with cutlasses and pistols; we were the only armed persons on board. The officers were then transferred to the *Lady Davis*. Midshipman Walker, I believe, went in the boat with the officers and steered the boat. When the boat returned it brought back some three or four of the crew of the *Lady Davis* and a further detachment of our company. The sailors of the *Lady Davis* were armed with cutlasses and pistols; our muskets were brought to us from the *Lady Davis*, and we were regularly stationed in various points about the ship. When we went on board our detachment understood that we were to take part in whatever service might be on hand, and on this account we took our arms along with us. I know nothing of the conversation which took place between Captain Elliott and Lieutenant Pelot. Lieutenant Pelot extended an invitation to the detachment while they were on the steamer on Saturday, to accompany the steamer the next day. We were stationed over the ship at various points by Captain Elliott.

Cross-examined by Mr. MILES:

I am a private in the Beaufort Volunteers. I acted under Captain Elliott's orders. Lieutenant Pelot did give some orders. When we were going to the ship Lieutenant Pelot objected to some one or two, myself particularly, that were going in the boat, thinking, I supposed, that the boat was overloaded. He gave other orders with regard to the part of the *Lady Davis* we were to occupy. The *Thompson* was really under the command of Captain Elliott; Lieutenant Stockton was only his mouthpiece, to issue the orders to the crew, as I understood it. The ship was worked entirely by her own crew, and the detachment of the company and the *Lady Davis's* crew did the same service, viz, keeping guard over the vessel and crew generally. The crew of the ship seemed to work very cheerfully; there was no resistance. The members of our company were all gentlemen of Beaufort.

In reply by Mr. TRESCOT:

When we came in sight of the *Thompson* we were assigned positions on board the *Lady Davis* by Captain Elliott.

R. M. FULLER.

Sworn to before me this 8th July, 1861.

R. C. GILCHRIST,
C. S. Commissioner.

Report of Flag-Officer Stringham, U. S. Navy, commanding Atlantic Blockading Squadron, regarding the seizure of English bark Hiawatha.

U. S. S. MINNESOTA,
Hampton Roads, May 20, 1861.

SIR: The bark *Hiawatha*, an English vessel, was seized this morning. She offers the excuse that they did not hear of the blockade except within the time allowed by a liberal construction of the terms of the blockade.

I am far from being satisfied with this vessel's presenting a state of facts warranting me in allowing her to pass out with her cargo.

The captain's remark of high freights is the true solution of the delay. I have ordered her to New York to await judicial investigation.

I hope this will meet your approbation.

Respectfully, your obedient servant,

S. H. STRINGHAM,
Senior Flag-Officer Blockading Squadron.

Hon. GIDEON WELLES,
Secretary Navy.

Order of the Secretary of the Navy to Commander Lee, U. S. Navy, commanding U. S. ship Vandalia, to report for duty in the West India Squadron.

NAVY DEPARTMENT, *May 20, 1861.*

SIR: As soon as the necessary repairs upon the U. S. sloop of war *Vandalia* are completed, you will proceed with her to Hampton Roads, Virginia, and report to Flag-Officer Pendergrast, commanding West India Squadron, for duty.

I am, respectfully, your obedient servant,

GIDEON WELLES.

Commander S. PHILLIPS LEE,
Commanding U. S. Sloop of War Vandalia, New York.

Report of Flag-Officer Pendergrast, U. S. Navy, commanding West India Squadron, regarding administration of oaths of allegiance.

U. S. FLAGSHIP CUMBERLAND,
Off Fortress Monroe, Va., May 20, 1861.

SIR: I have the honor to inform the Department that I yesterday administered the oath of allegiance to the officers and crew of this ship.

They all took the oath, with the exception of three officers, who are absent on duty.

The oaths signed by the officers are herewith enclosed.

The three officers absent will be sworn on their return to the ship.

I have the honor to be, sir, very respectfully, your obedient servant,

G. J. PENDERGRAST,
Flag-Officer, Commanding West India Squadron.

Hon. GIDEON WELLES,
Secretary of the Navy, Washington, D. C.

Report of Flag-Officer Stringham, U. S. Navy, commanding Atlantic Blockading Squadron, regarding transportation to the North of families of refugees.

U. S. S. MINNESOTA,
Hampton Roads, May 21, 1861.

SIR: I have the honor to inform the Department that, in compliance with your instructions of May 11, 1861, containing a copy of petition to the President of the United States from certain persons, former residents of Norfolk and Portsmouth, Va., that I immediately sent Commander A. Ludlow Case with a flag of truce to Norfolk, who had an interview with the military authorities, who promised to forward the objects of the flag. In compliance with which promise, the enclosed advertisement was made, and yesterday a steamer from Norfolk, in charge of the late Commander Thomas T. Hunter, of the Navy, delivered on board the steamer *Keystone State* between 75 and 100 women and children. The steamer would have proceeded immediately to sea, except for a heavy gale then blowing, and which yet continues from the northeast.

She will proceed to New York as soon as the wind subsides. The steamer *Star* [*Monticello*] has again been fired on from the rebel batteries this morning. I think I will send up the *Cumberland* and prevent the completion of this battery.

Respectfully, your obedient servant,

S. H. STRINGHAM,
Senior Flag-Officer Blockading Squadron.

Hon. GIDEON WELLES,
Secretary Navy.

[Enclosure.]

Special notice.

To-day a steamer will leave the railroad wharf, Portsmouth, under a flag of truce, to visit the Federal fleet off Old Point Comfort, for the purpose of taking to that place all women and children who may wish to join their Northern friends.

The boat will start at 12 m., and all desirous of leaving will please report themselves on board before that time.

The families of the following persons have already permission to leave in the steamer: James Hepenstall, L. T. Barnard, J. Lucas, George Richard Boush, John Harbonner, Jos. D. Knapp, Thomas Nelson, Robert Gill, John Butler, W. H. Lewis, James H. Hardwick.

By order of the commander in chief:

THOMAS T. HUNTER,
Commander, Virginia Navy.

Instructions of the Secretary of the Navy to Flag-Officer Stringham, U. S. Navy, commanding Atlantic Blockading Squadron, regarding establishment of an efficient blockade.

NAVY DEPARTMENT, *May 21, 1861.*

SIR: Your dispatches numbered from 1 to 10, inclusive, have been received.

The Department would impress upon you the necessity of a rigid blockade of the port of Charleston, and trusts that no effort will be spared to make it effective.

The *Niagara* was ordered to that duty, but important information as to large shipments of arms to New Orleans and Mobile imposed upon the Department the necessity of changing her destination to the Gulf. To supply her place until further disposition could be made, the Department on the 8th instant ordered that the *Harriet Lane* should perform that service, unless you made other efficient arrangements.

It is rumored that the *Niagara* has left her station off the port of Charleston, and that the blockade is not effective. Trusting that such is not the case, but informing you of the report, the Department would impress upon you the necessity of dispatching, if you have not already done so, a sufficient force to close the harbor of Charleston, and there should be no letting up of the blockade at that, nor indeed at any other point.

It is desirable that Savannah should also be blockaded, and the force at your disposal already is believed to be sufficient for that purpose. As soon as possible an interdiction of all intercourse with the States in insurrection should be instituted and established and every port effectually closed. This is a primary object, and our naval force should not be delayed from its execution or diverted to any other purpose. I take it for granted that the *Minnesota* will not have left Hampton Roads before the receipt of this dispatch, but as early thereafter as in your judgment the circumstances will warrant it is desirable that the force which can be spared from the Chesapeake should be set before the other ports on the coast, and especially before the two important ones indicated.

In a few days the *Wabash* will join your command and perform duty wherever you shall direct. A list of sixteen vessels to constitute a part of the Atlantic Blockading Squadron has already been transmitted to you. Others of our public vessels, as soon as they can be got in readiness, will join you, not only those repairing at the yards, but others returning from foreign stations.

Commodore Pendergrast will for the present remain at his station with the *Cumberland* while you are absent with the *Minnesota*, and will have, in addition to such other vessel or vessels as you may order, Ward's flotilla to carry out his command. The arrival of the *Freeborn* of this flotilla will enable you to send the *Dawn* on more effective service. Under no circumstances should the blockade once established be raised.

To your judgment and discretion the Department confides the duty of establishing the blockade.

Before your arrival on your station special instructions were, from the necessity of the case, given to such vessels as were dispatched to check the insurgents and carry out the purposes of the Government in closing the ports. These commanders had general instructions to capture privateers, vessels having arms, munitions, or articles contraband of war, or which were sailing under any authority or pretended authority not known or recognized by the United States.

Each and all of these vessels from the Chesapeake to Key West, whatever may have been their previous general orders, are subject to your command.

The importance of your movements and the great interests involved to the Government and country will render frequent and detailed reports from you necessary.

I am, respectfully, your obedient servant,

GIDEON WELLES.

Flag-Officer S. H. STRINGHAM,
Comdg. Atlantic Blockading Squadron, Hampton Roads, Virginia.

Report of Flag-Officer Stringham, U. S. Navy, commanding Atlantic Blockading Squadron, regarding disposition of vessels of his command.

U. S. S. MINNESOTA,
Hampton Roads, May 23, 1861.

SIR: I have the honor to acknowledge receipt of your letter of May 17, with list of vessels to compose the Atlantic Blockading Squadron.

As soon as the *Wabash* arrives I shall send her off Charleston.

Not being acquainted with the force or character of the other vessels, except as follows, I can not now say the exact disposition I shall make of them.

Brig *Perry* will leave immediately for the coast of Florida.

Harriet Lane [is] very serviceable for the Chesapeake. She can not carry coal except for a few days.

Dawn [is] very good for blockading York River.

Monticello [is] now engaged in blockading James and Elizabeth rivers, under command of Captain Henry Eagle. A most efficient vessel.

Union [has] not arrived; can not speak of her.

Reliance is about the size of a frigate launch. She could not go into the Chesapeake Bay with the wind we have had last day or two.

Resolute, a sister vessel, I am informed, to the *Reliance*.

Daylight, *Mount Vernon*, *Penguin*, and *Albatross* have not arrived. I can not, therefore, speak of them, and can only repeat that nothing shall be wanting on my part with the vessels. The Department has assigned me to keep as strict a blockade as possible on the Atlantic coast.

I am glad to hear the Department has purchased the *Yankee*. She is serviceable here, only requiring to have metal on her to protect from worms.

I again call the attention of the Department to the *Quaker City*. She is a most efficient steamer and is doing excellent service in boarding everything at Cape Henry. I hope she will be retained here, though I think $500 or $600 per diem will be fair allowance.

I also acknowledge receipt of your favor of May 18. I have and shall continue to give full protection to all claiming shelter of the American flag.

I shall exercise my best judgment in reference to disposition of prizes which I may take. This had led me to send the vessels thus far to Philadelphia and New York, which I shall continue, unless otherwise advised, except in case of small vessels, which I may send to Washington, not being willing to trust them to sea.

I shall be most happy to communicate and cooperate with Major-General Butler on his arrival here. Since commencement of the above letter the *Union* has arrived.

Respectfully, your obedient servant,

S. H. STRINGHAM,
Flag-Officer, Atlantic Blockading Squadron.

Hon. GIDEON WELLES,
Secretary of Navy.

Order of the Secretary of the Navy to Flag-Officer Stringham, U. S. Navy, commanding Atlantic Blockading Squadron, transmitting correspondence in the case of captured steamer Uncle Ben.

NAVY DEPARTMENT, *May 23, 1861.*

SIR: Herewith you will receive a copy of a letter of the Secretary of State, dated the 29th instant [ultimo], and also copies of the letters

therein referred to, concerning the seizure and detention of the steamer *Uncle Ben*, at Wilmington, N. C.

You will be pleased to carry out, as far as may be expedient, the recommendation of the Secretary of State in the premises.

I am, respectfully, your obedient servant,

GIDEON WELLES.

Flag-Officer S. H. STRINGHAM,
Hampton Roads, Virginia.

[Enclosure.]

DEPARTMENT OF STATE,
Washington, April 29, 1861.

SIR: I have the honor to submit for your consideration the accompanying letter, addressed by Messrs. Johnson & Higgins, of New York, to the Secretary of War, and by him referred to this Department, and to suggest the propriety of instructing the officer in command of our blockading squadron to use exertions for the relief of the persons referred to in the communication of Messrs. Johnson & Higgins. I enclose a transcript of my reply to the Secretary of War.

I am, sir, your obedient servant,

WILLIAM H. SEWARD.

Hon. GIDEON WELLES,
Secretary of the Navy.

[Subenclosures.]

OFFICE OF JOHNSON & HIGGINS,
AVERAGE ADJUSTERS AND INSURANCE BROKERS,
No. 89 Wall Street, New York, April 25, 1861.

DEAR SIR: Our steam tug, the *Uncle Ben*, was chartered by the Government in connection with the *Yankee*, in which boat we are also interested, through Mr. Russell Sturgis, of this city, to accompany the expedition to reenforce Fort Sumter.

Through the constant succession of adverse gales which prevailed at the time, we now learn that she was compelled to put into Wilmington, N. C., for coal; and by Mr. Whitlock, of the firm of Jones, Neilson & Whitlock, of this city, who has just arrived from that place, we are informed that the vessel was seized there by a mob, and that after temporarily confining them in the cabin, the officers and crew have been since thrown into prison, and from the increasing venom on the part of those people against Northerners, and their knowledge that the boat was employed in the service named, we entertain serious apprehensions of the safety of the lives of the men. We beg that you will take the subject into serious and immediate consideration and devise some plan for their relief.

Very respectfully,

JOHNSON & HIGGINS.

Hon. SIMON CAMERON,
Secretary of War, Washington.

DEPARTMENT OF STATE,
Washington, April 29, 1861.

SIR: I have submitted to the President the letter addressed to you on the 25th instant by Messrs. Johnson & Higgins, and which you referred to this Department.

He feels a deep concern for the brave and patriotic persons to whom it relates, and will submit to the Secretary of the Navy the propriety of instructing the officer having charge of the blockading squadron to intervene in any way he can for their relief.

I am, sir, your obedient servant,

W. H. SEWARD.

Hon. SIMON CAMERON,
Secretary of War.

Report of Flag-Officer Stringham, U. S. Navy, commanding Atlantic Blockading Squadron, regarding disposition of vessels and requirements for an efficient blockade.

U. S. S. MINNESOTA,
Hampton Roads, May 24, 1861.

SIR: I have the honor to acknowledge receipt of your letter of instructions of May 21, 1861.

From the tenor of this dispatch I infer you expected the *Minnesota* was or ought to be at sea. Under this impression I shall sail to-morrow morning for Charleston, leaving directions for those vessels on the list which you furnished me, and which have not yet arrived, to follow in the same direction as soon as they shall report here.

The *Wabash* is a vessel well qualified. The *Albatross*, *Penguin*, *Daylight*, and *Mount Vernon* I have not seen and can not therefore say what qualities they possess for blockading at sea, but I must in all candor say to the Department that the *Thomas Freeborn*, *Reliance*, and *Resolute* are unfit in any respect to go and be employed on the Atlantic coast, and hardly fit for the Chesapeake. I have sent Captain Ward with these three vessels to the Potomac and down the Chesapeake as far as the Rappahannock to prevent any and all communication from Virginia to Maryland.

The *Dawn* being quite a small vessel, I do not think she can be better employed than at York River and thereabouts.

The *Union* has been ordered and is now on her way to Savannah; also the *Perry* is on her way to Florida, off St. Mary's River.

The *Monticello* is well employed in preventing all communication from James River to the Elizabeth, and ready here for other service when needed.

The *Harriet Lane* is off Charleston. The *Cumberland* I leave here. This disposes of all the vessels of which I have any information. A day or two after my arrival the *Pocahontas* came here and informed me she was blockading off the mouth of the Rappahannock. I have learned from Captain Ward, who is direct from Washington, that this last-named steamer is now at Washington, whither she has gone without orders or even my knowledge until now.

With this report the Department will see there is but one vessel for Florida, and none on the coast of North Carolina.

I would respectfully state to the Department that in my judgment to make the blockade of the Atlantic coast perfect and strict, I require at least from twelve to fifteen more efficient and seagoing vessels. Steamers are preferable, or steamers in connection with sailing vessels, frigates, or sloops of war.

I would respectfully state that in my judgment there is required at least from four to five vessels for the coast of Florida, four or five on

the coast of Georgia, four or five on the coast of South Carolina, and the same number on the coast of North Carolina, and the Chesapeake will require at least four or five more. The cruising ground which you have assigned me is very extensive, from 900 to 1,000 miles. I shall, nevertheless, do with the means I now have all that I possibly can to carry into effect the blockade.

In your letter of May 18, you wish me to communicate and cooperate with Major-General B. F. Butler. I have met with him since his arrival and we have communicated together about affairs in this neighborhood. I have just called upon him to say that I leave to-morrow, which he regrets very much, as he wishes the services of the vessels in the movement which he contemplates making.

Respectfully, your obedient servant,

S. H. STRINGHAM,
Flag-Officer, Atlantic Blockading Squadron.

Hon. GIDEON WELLES,
Secretary of Navy.

Letter from Flag-Officer Stringham, U. S. Navy, commanding Atlantic Blockading Squadron, to Commodore Paulding, U. S. Navy, regarding existing conditions of his command.

U. S. S. MINNESOTA,
Hampton Roads, May 24, 1861.

DEAR COMMODORE: I have received your esteemed [favor] of 21st May. In answer, I shall first inform you that I sail to-morrow for Charleston to comply with the general desire which seems to prevail that I should be there, although ordered to the Chesapeake by the Department, as I supposed to arrange and station the blockading squadron. When I left Boston, I did not know a single vessel that would compose the fleet, except the *Minnesota*.

On my arrival here, I found the *Cumberland* and *Harriet Lane*. The *Monticello* was at York River, blockading there. The *Dawn* first arrived. After I put her in proper condition, she appearing from the requests and requisitions made by her commander to be in want of most everything, I ordered her to relieve the *Monticello*, and ordered the *Monticello* to take the station of the *Harriet Lane*, I having received orders to send the latter to Charleston, where she is at present.

Then came the *Perry*, short of officers. I had to detain her a few days for her purser, occupied in the interval with supplying her many wants. She is now on her way to Florida.

Next came the flotilla of Captain Ward. I should like to have you see them, that I might have your opinion of their qualities for blockading; two of them certainly not equaling in safety or capacity a line-of-battle ship's launch, and the *Thomas Freeborn*, the commander's vessel, with guards I observed to-day about 1 foot from the water's edge. I have sent them to-day to guard the Potomac and prevent all intercourse between Virginia and Maryland.

Next comes the *Union*, a long, low steamer, and quite a nice looking vessel, rather in distress from defective magazine. I hurried her off to Savannah, and after I leave in the morning, I leave behind the *Cumberland* and the *Monticello* to do duty at this point. When I shall see the other vessels mentioned I can not now say, but will give you my

opinion that, with the addition of twelve or fifteen more good vessels, of these three or four frigates, for offshore cruising, and steamers inshore, I might make a strict blockade.

As you will no doubt remember, the coast from Key West to the Chesapeake is from 900 to 1,000 miles.

If you can have the vessels sent me I shall be much gratified. At the same time I will suggest that the better arrangement for the commander of such a squadron would be at some point where the vessels can communicate to him and receive instructions for cruising, etc., from time to time, until he gets them fairly located according to their adaptation for the services required of them, when he could cruise himself with more propriety and keep a general supervision of the blockade.

Very respectfully, your obedient servant,

S. H. STRINGHAM,
Flag-Officer, Atlantic Blockading Squadron.

Commodore H. PAULDING.

Order of the Secretary of the Navy to Lieutenant Sartori, U. S. Navy commanding U. S. S. Flag, to proceed to duty in Atlantic Blockading Squadron.

NAVY DEPARTMENT, *May 24, 1861.*

SIR: In consequence of the steamer *Flag* not being coppered, she will form a part of the Atlantic Blockading Squadron.

Therefore, instead of proceeding with her to the Gulf, as instructed on the 17th instant, you will stop at Hampton Roads. Not finding instructions there from Flag-Officer Stringham for your guidance, you will continue your course to Charleston, and remain off that port until otherwise directed by the Department or the flag-officer of the Atlantic Blockading Squadron.

I am, respectfully, your obedient servant,

GIDEON WELLES.

Lieutenant L. C. SARTORI,
Commanding U. S. S. Flag, Philadelphia.

Letter from the Secretary of the Navy to Flag-Officer Stringham, U. S. Navy, commanding Atlantic Blockading Squadron, regarding U. S. S. Flag.

NAVY DEPARTMENT, *May 24, 1861.*

SIR: The steamer *Flag*, now at Philadelphia, will form a part of the Atlantic Blockading Squadron. Her commanding officer, Lieutenant L. C. Sartori, has been directed to proceed with her to Hampton Roads, and in the event of not finding instructions there from you, to continue to Charleston, S. C., and remain off that port until otherwise ordered by the Department or the flag-officer of the Atlantic Blockading Squadron.

I am, respectfully, your obedient servant,

GIDEON WELLES.

Flag-Officer S. H. STRINGHAM,
Comdg. Atlantic Blockading Squadron, Hampton Roads, Virginia.

UNITED STATES STEAMER QUAKER CITY.

Order of Flag-Officer Stringham, U. S. Navy, commanding Atlantic Blockading Squadron, to Captain Van Brunt, U. S. Navy, commanding U. S. S. Minnesota.

U. S. S. MINNESOTA,
Hampton Roads, May 21, 1861.

SIR: You will have the *Minnesota* ready for sea as soon as possible, and report to me when she is ready.

Respectfully, your obedient servant,

S. H. STRINGHAM,
Flag-Officer, Atlantic Blockading Squadron.

Captain G. J. VAN BRUNT.

Order of the Secretary of the Navy to Flag-Officer Stringham, U. S. Navy, commanding Atlantic Blockading Squadron, to furnish duplicate instructions to prize masters.

NAVY DEPARTMENT, *May 21, 1861.*

SIR: When prizes are taken and placed in charge of prize masters for conveyance to any prize court, you will furnish the prize master with duplicate instructions, so that one copy may be deposited with the clerk of the district court to which the prize may be sent.

I am, respectfully, your obedient servant,

GIDEON WELLES.

Flag-Officer S. H. STRINGHAM,
Comdg. Atlantic Blockading Squadron, Hampton Roads, Virginia.

Report of Flag-Officer Stringham, U. S. Navy, commanding Atlantic Blockading Squadron, regarding disposition of captured vessels Tropic Wind and Pioneer.

U. S. S. MINNESOTA,
Hampton Roads, May 25, 1861.

SIR: I have the honor to inform the Department that I have released the small vessels which were detained prior to the sixteenth day after instituting strict blockade.

I have sent the English schooner *Tropic Wind*, captured the twenty-first day after instituting blockade, to Washington.

The bark *Pioneer*, also captured after the expiration of full notice—cargo and vessel owned in Richmond—I have sent to New York.

Respectfully, your obedient servant,

S. H. STRINGHAM,
Flag-Officer, Atlantic Blockading Squadron.

Hon. GIDEON WELLES,
Secretary Navy.

Letter from Flag-Officer Stringham, U. S. Navy, commanding Atlantic Blockading Squadron, to Commodore Paulding, U. S. Navy, regarding chartered steamer Quaker City.

U. S. S. MINNESOTA,
Hampton Roads, May 25, 1861.

COMMODORE: In my letter to you of this date I forgot to mention the *Quaker City*, now doing most effective duty at Cape Henry.

Report of Flag-Officer Stringham, U. S. Navy, commanding Atlantic Blockading Squadron, regarding the steamer Uncle Ben and the capture of the bark Winfred.

U. S. S. MINNESOTA,
Hampton Roads, May 25, 1861.

SIR: I have the honor to acknowledge receipt of your communication* of May 23, in reference to steamer *Uncle Ben*, captured at Wilmington.

I shall give this matter in charge to Captain Eagle, of the *Monticello*, whom I have ordered to proceed and cruise off Wilmington as soon as the *Harriet Lane* returns, but as North Carolina has seceded they no doubt will consider her a lawful prize.

I have this morning taken possession of bark *Winfred*, from Rio de Janeiro, owned [in] and loaded for Richmond, Va. I shall send her direct to New York. I have received yours of 23d, with enclosed copy of letter from Captain McKean, of the *Niagara*.

Respectfully, your obedient servant,

S. H. STRINGHAM,
Flag-Officer, Atlantic Blockading Squadron.

Hon. GIDEON WELLES,
Secretary of Navy.

Report of Flag-Officer Pendergrast, U. S. Navy, commanding West India Squadron, of the sailing from Hampton Roads, Virginia, of Flag-Officer Stringham and Commander Ward, U. S. Navy.

U. S. FLAGSHIP CUMBERLAND,
Off Fortress Monroe, Va., May 25, 1861.

SIR: I have the honor to inform the Department that Flag-Officer Stringham sailed from here this day in the U. S. steam frigate *Minnesota*. Commander Ward has left here also and gone to the Potomac with his flotilla.

I have the honor to be, very respectfully, sir, your obedient servant,

G. J. PENDERGRAST,
Flag-Officer, Commanding West India Squadron.

Hon. GIDEON WELLES,
Secretary of Navy.

Report of Flag-Officer Pendergrast, U. S. Navy, commanding West India Squadron, urging the need of a paymaster and additional midshipmen.

U. S. FLAGSHIP CUMBERLAND,
Off Fortress Monroe, Va., May 25, 1861.

SIR: I have the honor to inform the Department that Lieutenant Crosby arrived here this morning and reported for duty on board this ship.

I would also again respectfully remind the Department that no paymaster has arrived, and that it is impossible to do without one much longer.

---

*See p. 662.

Before sailing from Boston you will have transmitted to the Department a complete muster roll of the crew of the *Minnesota* and a separate list of her officers.

I am, very respectfully, your obedient servant,

GIDEON WELLES.

Flag-Officer S. H. STRINGHAM,
Appointed to Command Blockading Squadron, Boston, Mass.

[Enclosures.]

By the President of the United States of America.—Proclamations.

Whereas an insurrection against the Government of the United States has broken out in the States of South Carolina, Georgia, Alabama, Florida, Mississippi, Louisiana, and Texas, and the laws of the United States for the collection of the revenue can not be effectually executed therein, conformably to that provision of the Constitution which requires duties to be uniform throughout the United States; and

Whereas a combination of persons engaged in such insurrection has threatened to grant pretended letters of marque to authorize the bearers thereof to commit assaults on the lives, vessels, and property of good citizens of the country lawfully engaged in commerce on the high seas and in waters of the United States; and

Whereas an Executive proclamation has been already issued requiring the persons engaged in these disorderly proceedings to desist therefrom, calling out a militia force for the purpose of repressing the same, and convening Congress in extraordinary session to deliberate and determine thereon;

Now, therefore, I, Abraham Lincoln, President of the United States, with a view to the same purposes before mentioned, and to the protection of the public peace and the lives and property of quiet and orderly citizens pursuing their lawful occupations until Congress shall have assembled and deliberated on the said unlawful proceedings, or until the same shall have ceased, have further deemed it advisable to set on foot a blockade of the ports within the States aforesaid, in pursuance of the laws of the United States and of the law of nations in such case provided. For this purpose a competent force will be posted so as to prevent entrance and exit of vessels from the ports aforesaid. If, therefore, with a view to violate such blockade a vessel shall approach or shall attempt to leave either of the said ports, she will be duly warned by the commander of one of the blockading vessels, who will endorse on her register the fact and date of such warning, and if the same vessel shall again attempt to enter or leave the blockaded port she will be captured and sent to the nearest convenient port for such proceedings against her and her cargo as prize as may be deemed advisable.

And I hereby proclaim and declare that if any person, under the pretended authority of the said States, or under any other pretense, shall molest a vessel of the United States, or the persons or cargo on board of her, such person shall be held amenable to the laws of the United States for the prevention and punishment of piracy.

In witness whereof I have hereunto set my hand and caused the seal of the United States to be affixed.

Done at the city of Washington this 19th day of April, A. D. 1861, and of the Independence of the United States the eighty-fifth.

[L. S.] ABRAHAM LINCOLN.

By the President:

WILLIAM H. SEWARD, *Secretary of State.*

Whereas, for reasons assigned in my proclamation of the 19th instant, a blockade of the ports of the States of South Carolina, Georgia, Florida, Alabama, Louisiana, Mississippi, and Texas was ordered to be established; and, whereas, since that date public property of the United States has been seized, the collection of the revenue obstructed, and duly commissioned officers of the United States, while engaged in executing the orders of their superiors, have been arrested and held in custody as prisoners, or have been impeded in the discharge of their official duties without due legal process by persons claiming to act under authority of the States of Virginia and North Carolina, an efficient blockade of the ports of those States will therefore also be established.

In witness whereof I have hereunto set my hand and caused the seal of the United States to be affixed.

Done at the city of Washington this 27th day of April, A. D. 1861, and of the Independence of the United States the eighty-fifth.

[L. S.] ABRAHAM LINCOLN.

By the President:

WILLIAM H. SEWARD, *Secretary of State.*

Order of the Secretary of the Navy to Flag-Officer Stringham, U. S. Navy, appointed to command the blockading squadron, to hoist his flag at the fore-masthead.

NAVY DEPARTMENT, *May 1, 1861.*

SIR: Having been over fifty years in the service, and nearly twenty as a captain, you will hoist your flag at the fore instead of at the mizzen of the *Minnesota.*

The Department in this instance suspends its general order of May 18, 1858, on the ground of your having seen nearly the requisite service as a captain in the Navy, and as an honor to the commander of the Coast Blockading Squadron.

I am, respectfully, etc.,

GIDEON WELLES.

Flag-Officer S. H. STRINGHAM, U. S. Navy,
Boston.

Instructions of the Secretary of the Navy to Flag-Officer Stringham, U. S. Navy, appointed to command the Coast Blockading Squadron, regarding the blockade of Southern ports.

Confidential.] NAVY DEPARTMENT, *May 1, 1861.*

SIR: The President, by proclamation of 19th April, 1861, ordered a blockade of the ports within the States of South Carolina, Georgia, Alabama, Florida, Mississippi, Louisiana, and Texas; and by a supplemental proclamation of the 27th April, 1861, he extends the blockade so as to include the ports of Virginia and North Carolina. In pursuance of the laws of the United States and of the law of nations, in such cases provided, it becomes necessary that a competent force be posted so as to prevent the entrance and exit of vessels from the ports aforesaid.

With this view you will establish and enforce a blockade at each and all of the ports in the States enumerated east of Key West, and a sufficient disposable force will be placed under the command of yourself that you may carry these orders into effect. On you will devolve the duty of blockading all the ports east of Key West.

You will duly notify neutrals of the declaration of blockade, and give to it all the publicity in your power. The blockade must be strict and absolute, and only public armed vessels of foreign powers should be permitted to enter the ports which are placed in a state of blockade. To neutral or foreign vessels that are already in the ports, you will allow a reasonable number of days to leave them. The country relies upon your command, with the squadron of the Gulf, to make this blockade effectual, so as to close all the ports of the States above named, protect our commerce from the depredations of privateers, and contribute by your activity and vigilance to the speedy suppression of the insurrectionary movements and the adjustment of the present unhappy difficulties.

It will not be improper to state to you that a lawful maritime blockade requires the actual presence of an adequate force stationed at the entrance of the port sufficiently near to prevent communication. The only exception to this rule which requires the actual presence of an adequate force to constitute a lawful blockade arises out of the circumstance of the occasional temporary absence of the blockading squadron, produced by accident, as in the case of a storm, which does not suspend the legal operation of a blockade. The law considers an attempt to take advantage of such an accidental removal a fraudulent attempt to break the blockade.

You will permit no neutral or foreign vessel proceeding toward the entrance of a blockaded port to be captured or detained if she shall not have previously received from one of the blockading squadron a special notification of the existence of the blockade. This notification must be inserted in writing on the muster roll of the neutral vessel by the cruiser which meets her; and it should contain the announcement, together with statements of the day and the latitude in which it was made.

The United States have at all times maintained these principles on the subject of blockade, and you will take care not to attempt the application of penalties for a breach of blockade except in cases where your right is justified by these rules.

I am, sir, very respectfully, your obedient servant,

G. WELLES,
Secretary Navy.

Flag-Officer S. H. STRINGHAM,
Commanding Coast Blockading Squadron.

Letter from Flag-Officer Stringham, U. S. Navy, appointed to command the Coast Blockading Squadron, to the Secretary of the Navy, requesting instructions regarding persons seeking protection of the United States flag.

BOSTON, *May 3, 1861.*

SIR: I have the honor to address you, to ask if the Department has any further instructions to give me in reference to the important interests and duties which will devolve upon me to protect and perform, and I venture most respectfully to call the attention of the Department to one particular subject which I think must and will arise, and upon

which I shall no doubt early in my official position be called upon to decide and act. I refer to appeals which may be made to me by persons in the revolted States, perhaps elsewhere, for that protection and shelter which the American flag and those having it in charge always have afforded (as I trust it always will) to all claiming its shelter and protection. I respectfully call the attention of the Department to this important subject.

Respectfully, your obedient servant,

S. H. STRINGHAM,
Flag-Officer.

Hon. GIDEON WELLES,
Secretary of Navy.

Further instructions of the Secretary of the Navy to Flag-Officer Stringham, U. S. Navy, appointed to command the Coast Blockading Squadron, regarding the institution of blockade.

Confidential.] NAVY DEPARTMENT, *May 4, 1861.*

SIR: You received general instructions from the Department, under date of the 1st of May, for carrying into effect the blockade which the President has ordered, and which is the immediate and special object of your command. It was stated in those instructions that you would allow to neutral vessels in port a reasonable number of days to depart after the blockade should be established. The Department would in every instance allow at least fifteen days for vessels to depart, with or without cargo, after the blockade is set with a sufficient force. Notice should be given by such extended publicity as you can command at each and every port as soon as the blockade is established.

Commodore Pendergrast will inform you of the condition of affairs and orders received. He will also assist with the *Cumberland* in enforcing the blockade for the present.

I need not enjoin vigilance and promptness to prevent privateering and depredations; but I send herewith copies and extracts of letters received at the Department touching the movements on foot at Savannah.

It was the intention of the Department to have had the *Niagara* stationed at Savannah, but the intelligence received this morning induces a necessity that she should go into the Gulf, to intercept the vessels carrying arms to New Orleans and Mobile.

There are several vessels in the waters of the Chesapeake to aid you, and others which are being equipped will soon arrive out and report. The names, officers, crews, and armaments of these vessels are not yet reported in full to the Department, in consequence of the haste and activity necessary to get them afloat at the earliest moment.

Some of the vessels can, it is believed, aid in blockading the Mississippi and Mobile. But much must be committed to your judgment and discretion.

Commodore Mervine will shortly proceed to the Gulf with the *Mississippi*, and other vessels will be speedily dispatched to reenforce the blockading squadron and close Galveston and other ports.

I am, sir, respectfully, your obedient servant,

GIDEON WELLES,
Secretary Navy.

Flag-Officer S. H. STRINGHAM,
Commanding Blockading Squadron.

Report of Flag-Officer Stringham, U. S. Navy, commanding Coast Blockading Squadron, of the hoisting of his flag on the U. S. S. Minnesota.

BOSTON, MASS., *May 4, 1861.*

SIR: I have the honor to inform the Department that I have this day hoisted my flag on board the U. S. steam frigate *Minnesota*. I shall proceed to sea the moment Captain Van Brunt reports the ship as ready. I most respectfully inform the Department that the paymaster is entirely without funds to make any advances. The officers have contracted some necessary debts for stores, etc., and to go to sea without being able to liquidate these debts will be most embarrassing. I respectfully suggest that the Department by telegraph authorize the navy agent here to supply the ship with funds.

Respectfully, your obedient servant,

S. H. STRINGHAM,
Flag-Officer.

Hon. GIDEON WELLES,
Secretary of Navy.

Report of Flag-Officer Stringham, U. S. Navy, commanding Coast Blockading Squadron, acknowledging the honor conferred by the Department.

U. S. STEAM FRIGATE MINNESOTA,
Boston, May 6, 1861.

SIR: I respectfully acknowledge the receipt of your esteemed favor, under date Navy Department, May 1, 1861, in which you inform me the Department has been pleased in my case "to suspend its general order of May 18, 1858."

The flattering terms contained in your communication ordering me to hoist my flag at the fore instead of at the mizzen of the *Minnesota*, where I had placed it, can only be returned by the assurance that I will endeavor to merit the high honor conferred, both by this mark of the confidence of the Department and the much greater one in being appointed at this important time and in our country's hour of trial as "commander of the Coast Blockading Squadron."

Respectfully, your obedient servant,

S. H. STRINGHAM,
Flag-Officer.

Hon. GIDEON WELLES,
Secretary of Navy.

Instructions of the Secretary of the Navy to Flag-Officer Stringham, U. S. Navy, commanding Coast Blockading Squadron, regarding the protection of American interests and citizens.

Confidential.] NAVY DEPARTMENT, *May 6, 1861.*

SIR: Yours of the 3d instant is received. Further instructions in relation to the blockade were sent to Old Point on the 4th instant, which you will have received on your arrival. Commodore Pendergrast will advise you of the steps he has taken. There will for a time be some irregularity in regard to the vessels composing the blockading

squadron, from the hasty manner in which the vessels and officers have been collected and equipped. This you will soon regulate after they shall have reported to you.

In addition to the instructions enjoining a vigilant guardianship of American interests, you will not fail, when invoked, to interpose the authority with which you are invested for the protection of those who claim shelter under the American flag. Let the emblem of our nationality, which you and our tars have supported with honor in every land, afford security to American citizens wherever they ask for its aid or seek its protection.

I am, sir, respectfully, your obedient servant,

GIDEON WELLES,
Secretary Navy.

Flag-Officer S. H. STRINGHAM,
Commanding Blockading Squadron.

P. S.—On the 2d instant the *Niagara* was ordered to proceed to Charleston and institute a rigid blockade. The day on which she sailed information was communicated to the Department of a large shipment of arms from England and Belgium to New Orleans, rendering it necessary that the *Niagara* should be detached from the Charleston blockade and proceed at once to the Gulf. You will find it necessary, therefore, to place a force before Charleston at the earliest possible moment to enforce the blockade.

Report of Flag-Officer Stringham, U. S. Navy, commanding Coast Blockading Squadron, acknowledging Department's instructions.

U. S. STEAM FRIGATE MINNESOTA,
Boston, May 7, 1861.

SIR: I have the honor to acknowledge the receipt of orders dated Navy Department, May 1, 1861; also instructions in regard to blockading, bearing same date; also five copies of a proclamation by the President of the United States of America, dated Washington, April 19, 1861, declaring blockade of the States of South Carolina, Georgia, Alabama, Florida, Mississippi, Louisiana, and Texas.

Respectfully, your obedient servant,

S. H. STRINGHAM,
Flag-Officer.

Hon. GIDEON WELLES,
Secretary of the Navy.

Report of Flag-Officer Stringham, U. S. Navy, commanding Coast Blockading Squadron, of the departure from Boston navy yard of the U. S. S. Minnesota.

U. S. STEAM FRIGATE MINNESOTA,
Boston Harbor, May 8, 1861.

SIR: I have the honor to inform the Department that we left the wharf at the navy yard at about half past 8 o'clockt his morning and are now leaving the harbor. I shall proceed to obey your instructions.

I am sorry to inform the Department that the ship sailed short of officers, in the absence of the captain of the marine guard, detached by your orders, received only the day before sailing, and that we are further short of a passed assistant surgeon, whom we need very much, because the fleet surgeon has always been sick at sea for the past ten years, and I fear it may be [the] case now. The assistant surgeon has never been to sea before. I hope these important officers may be provided at the earliest convenience.

Respectfully, your obedient servant,

S. H. STRINGHAM,
Flag-Officer.

HON. GIDEON WELLES,
Secretary of the Navy.

Instructions from the Secretary of the Navy to Flag-Officer Stringham, U. S. Navy, commanding Coast Blockading Squadron, regarding the blockade of Charleston, S. C.

Confidential.] NAVY DEPARTMENT, *May 8, 1861.*

SIR: You were informed by letter on the 6th instant that Captain McKean with the *Niagara* had been ordered to proceed to the Gulf, and, in consequence of this, the port of Charleston would be relieved of the rigid blockade which it is a primary object to carry into full effect. The *Harriet Lane* being no longer necessary on the upper waters of the Chesapeake has been ordered to Hampton Roads to report to you for orders. You can, if you choose, direct that she perform blockade services before Charleston, or order her on other duty, as she has been placed by the Secretary of the Treasury at the disposal of the Navy Department.

It is the wish of the Department that the vessels composing the blockading squadron under your command should be stationed to duty at the different ports by yourself, and that you report to the Department in regard to them respectively, and from time to time, as you have facts or information concerning each.

It has been already stated that reasonable time should be allowed neutral vessels to leave ports after blockade commences, at least fifteen days, and you will notify the blockading squadron in every instance to this effect. There are rumors of privateers abroad, and fitting out. Whatever truth there may be in these rumors, it is essential there should be promptness and vigilance, not only in rigidly enforcing the blockade, but in capturing every piratical vessel or privateer on our coast. The vessels of the Navy, and those chartered and purchased for the emergency, destined for the coast blockade, will be sent to you from time to time as they are equipped and manned.

Should you order the *Harriet Lane* to Charleston, please forward any dispatches you may have, or that are on board the *Cumberland*, to Captain McKean, of the *Niagara*, who it is supposed is still before Charleston.

I am, sir, respectfully, etc.,

GIDEON WELLES,
Secretary Navy.

Flag-Officer S. H. STRINGHAM,
Commanding Blockading Squadron.

Order of the Secretary of the Navy to commandant navy yard, New York, regarding U. S. vessels Perry and Dawn.

NAVY DEPARTMENT, *May 9, 1861.*

SIR: The moment the brig *Perry* or the steamer *Dawn* are ready for sea, you will direct them to proceed to Hampton Roads, Virginia, and report to Flag-Officer Stringham, or the senior commanding officer present, for service in the blockading squadron.

Before sailing you will have muster rolls of these vessels transmitted to the Department.

I am, respectfully, your obedient servant,

GIDEON WELLES.

Commodore S. L. BREESE,
Commandant Navy Yard, New York.

Order of the Secretary of the Navy to Captain Faunce, U. S. Revenue Marine, regarding U. S. S. Harriet Lane.

Confidential.] NAVY DEPARTMENT, *May 10, 1861.*

SIR: You will proceed to Hampton Roads, and report to Flag-Officer Stringham, of the Coast Blockading Squadron, who is or will soon be there, and report for such duty as he may order.

I am, sir, respectfully, etc.,

GIDEON WELLES,
Secretary of the Navy.

Captain JNO. FAUNCE,
Commanding Steamer Harriet Lane.

Order of the Secretary of the Navy to Flag-Officer Stringham, U. S. Navy, commanding Coast Blockading Squadron, regarding families of refugees.

NAVY DEPARTMENT, *May 11, 1861.*

SIR: I send herewith a copy of the petition of sundry refugees from Norfolk to the President, asking a safe conveyance of their families to New York. It is the wish of the President that you extend such aid, in furtherance of their request, to their unfortunate families, as in your judgment the circumstances require.

I am, very respectfully, your obedient servant,

GIDEON WELLES,
Secretary Navy.

Flag-Officer S. H. STRINGHAM,
Commanding Blockading Squadron.

[Enclosure.]

BROOKLYN NAVY YARD, *May 7, 1861.*

SIR: We, the undersigned citizens of the United States of America, having been compelled to flee the State of Virginia because of our loyalty to our flag and our country, are under the necessity of applying to you for protection for our families (who being still in Virginia are exposed to the power of our enemies) and assistance in bringing them

UNITED STATES STEAMER MINNESOTA.

ATLANTIC BLOCKADING SQUADRON.

FROM APRIL 4 TO JULY 15, 1861.

Order of the Secretary of the Navy to Commodore Stringham, U. S. Navy, to hoist his flag on board the U. S. S. Minnesota.

NAVY DEPARTMENT, *April 4, 1861.*

SIR: You are relieved from duty as a member of the naval general court-martial now convened in this city, and also from special duty at Washington connected with the discipline of the service.

You will proceed to Boston, Mass., and when the U. S. steam frigate *Minnesota* shall be put in commission you will hoist your flag on board that vessel and await the further instructions of the Department.

I am, respectfully,

GIDEON WELLES.

S. H. STRINGHAM, U. S. Navy,
Washington.

Report of Flag-Officer Stringham, U. S. Navy, regarding the condition of the flagship Minnesota.

NAVY YARD, BOSTON, *April 11, 1861.*

SIR: I have to report my arrival at this place in obedience to your order of the 4th instant. I find the ship in a rapid state of forwardness. Captain Hudson is driving as fast as possible, with every probability of having her ready for her officers and crew in about fifteen days.

I shall leave again for Brooklyn this afternoon to complete my necessary arrangements for sea, but shall return in a week to remain until the ship sails.

I am, respectfully, your obedient servant,

S. H. STRINGHAM,
Flag-Officer, U. S. Navy.

HON. GIDEON WELLES,
Secretary of the Navy, Washington, D. C.

Order of the Secretary of the Navy to Flag-Officer Stringham, U. S. Navy, to proceed to Hampton Roads, Va.

Confidential.] NAVY DEPARTMENT, *April 22, 1861.*

SIR: The exigency of the times and recent developments render it necessary that there should be a change from the arrangement as understood in regard to your service at the time you left Washington. It

will therefore be necessary that you proceed immediately to the mouth of Hampton Roads with the *Minnesota*, to protect our commerce, suppress piratical or illegal demonstrations, and guard the public interests in that quarter.

As the mails and telegraph are interrupted, I send you these brief and general instructions by special messenger, who will deposit this letter in the New York post-office, or some other office beyond the point of interruption. I shall endeavor to send you more full instructions before your departure, but I would not have you delay sailing one moment after you can get underway for further orders. Details and special instructions can be communicated to you after your arrival at Hampton Roads, where your presence and that of your ship are required with all possible dispatch.

You will have seen the two proclamations of the President, one of the [15th]* and the other of the [19th]† instant, and are generally advised of the unhappy condition of affairs. Since these proclamations were issued, there have been hostile and insurrectionary movements in and near the waters of the Chesapeake of a threatening character. It is reported that persons without authority have armed vessels under their command, with which they are harassing our commerce and committing other outrages, which you will take measures to prevent, capturing these violators of the public peace, and otherwise proceeding to vindicate the authority of the Government and the flag.

I am, sir, respectfully, etc.,

GIDEON WELLES,
Secretary Navy.

Commodore S. H. STRINGHAM,
Steamer Minnesota, Boston.

Report of Flag-Officer Stringham, U. S. Navy, regarding the condition of the U. S. S. Minnesota.

BOSTON, *April 24, 1861.*

SIR: I have the honor to inform you that I have this day, by publication, directed the officers of the *Minnesota* to report forthwith.

The ship, I think, will not be able to sail in less than twelve days.

Respectfully, your obedient servant,

S. H. STRINGHAM,
Flag-Officer.

Hon. GIDEON WELLES.

Report of Flag-Officer Stringham, U. S. Navy, acknowledging receipt of instructions.

BOSTON, *April 26, 1861.*

SIR: Your letter of instructions, bearing date April 22, is received. I shall have the ship ready as soon as possible, and carry out your instructions of that date fully.

Respectfully, your obedient servant,

S. H. STRINGHAM,
Flag-Officer.

Hon. GIDEON WELLES, *Secretary of Navy.*

---

* Declaring insurrection to exist.
† Declaring blockade of the ports of the seven States in insurrection.

Report of Flag-Officer Stringham, U. S. Navy, regarding preparation of vessels at Boston.

BOSTON, *April 30, 1861.*

SIR: I have no doubt the Department is very anxious about the speedy departure of the *Minnesota* and other vessels here. I can assure the Department everything is being done that can be to hasten the departure of all the vessels. Men are working day and night and no cessation on Sunday. The *Minnesota* is in rapid state of progress. This ship will be ready for her crew by Thursday. If possible we shall sail on Saturday, [I] think by Monday at furthest. May I ask the Department to furnish me with a list of the vessels that will be ordered to report to me as attached to my command?

Respectfully, your obedient servant,

S. H. STRINGHAM,
Flag-Officer.

Hon. GIDEON WELLES,
Secretary of Navy.

Instructions of the Secretary of the Navy to Flag-Officer Stringham, U. S. Navy, appointed to command the bockading squadron, in regard to the institution of the blockade of Southern ports.

NAVY DEPARTMENT, *May 1, 1861.*

SIR: You have been previously instructed to proceed to Boston, and when the U. S. steam frigate *Minnesota* should be put in commission to hoist your flag on board that vessel.

The President has found it necessary to issue proclamations closing the ports of those States which are resisting the laws of the Federal Government, and you have been selected to take command of the squadron that will carry into effect the proclamations at all the ports from the capes of the Chesapeake to the southern extremity of Florida and Key West, including the ports, rivers, and inlets of Chesapeake Bay.

Copies of the proclamation of the President issued on the 19th of April are herewith transmitted, together with instructions from the Department in relation to the blockade. A subsequent proclamation extends the blockade to the ports of Virginia and North Carolina.

The moment the *Minnesota* is ready for sea, you will proceed with her with all dispatch to Hampton Roads, at which point other steamers and vessels will be directed to rendezvous as they shall be fitted and equipped for service, for the purpose of receiving your specific instructions to establish and carry into effect the blockade, which must be strict and absolute.

The more immediate and effectual the blockade is instituted, the more speedy and advantageous will be its results. There is already a considerable naval force at Hampton Roads, waiting your orders as to their destination and service.

Instructions more full and more in detail will be forwarded to you on your arrival in the Chesapeake, and your proximity to the seat of Government will make communication with you easy.

Periodical supplies of coal and provisions will be forwarded to you and to the force before the different ports.

Before sailing from Boston you will have transmitted to the Department a complete muster roll of the crew of the *Minnesota* and a separate list of her officers.

I am, very respectfully, your obedient servant,

GIDEON WELLES.

Flag-Officer S. H. STRINGHAM,
Appointed to Command Blockading Squadron, Boston, Mass.

[Enclosures.]

By the President of the United States of America.—Proclamations.

Whereas an insurrection against the Government of the United States has broken out in the States of South Carolina, Georgia, Alabama, Florida, Mississippi, Louisiana, and Texas, and the laws of the United States for the collection of the revenue can not be effectually executed therein, conformably to that provision of the Constitution which requires duties to be uniform throughout the United States; and

Whereas a combination of persons engaged in such insurrection has threatened to grant pretended letters of marque to authorize the bearers thereof to commit assaults on the lives, vessels, and property of good citizens of the country lawfully engaged in commerce on the high seas and in waters of the United States; and

Whereas an Executive proclamation has been already issued requiring the persons engaged in these disorderly proceedings to desist therefrom, calling out a militia force for the purpose of repressing the same, and convening Congress in extraordinary session to deliberate and determine thereon;

Now, therefore, I, Abraham Lincoln, President of the United States, with a view to the same purposes before mentioned, and to the protection of the public peace and the lives and property of quiet and orderly citizens pursuing their lawful occupations until Congress shall have assembled and deliberated on the said unlawful proceedings, or until the same shall have ceased, have further deemed it advisable to set on foot a blockade of the ports within the States aforesaid, in pursuance of the laws of the United States and of the law of nations in such case provided. For this purpose a competent force will be posted so as to prevent entrance and exit of vessels from the ports aforesaid. If, therefore, with a view to violate such blockade a vessel shall approach or shall attempt to leave either of the said ports, she will be duly warned by the commander of one of the blockading vessels, who will endorse on her register the fact and date of such warning, and if the same vessel shall again attempt to enter or leave the blockaded port she will be captured and sent to the nearest convenient port for such proceedings against her and her cargo as prize as may be deemed advisable.

And I hereby proclaim and declare that if any person, under the pretended authority of the said States, or under any other pretense, shall molest a vessel of the United States, or the persons or cargo on board of her, such person shall be held amenable to the laws of the United States for the prevention and punishment of piracy.

In witness whereof I have hereunto set my hand and caused the seal of the United States to be affixed.

Done at the city of Washington this 19th day of April, A. D. 1861, and of the Independence of the United States the eighty-fifth.

[L. S.] ABRAHAM LINCOLN.

By the President:

WILLIAM H. SEWARD, *Secretary of State.*

Whereas, for reasons assigned in my proclamation of the 19th instant, a blockade of the ports of the States of South Carolina, Georgia, Florida, Alabama, Louisiana, Mississippi, and Texas was ordered to be established; and, whereas, since that date public property of the United States has been seized, the collection of the revenue obstructed, and duly commissioned officers of the United States, while engaged in executing the orders of their superiors, have been arrested and held in custody as prisoners, or have been impeded in the discharge of their official duties without due legal process by persons claiming to act under authority of the States of Virginia and North Carolina, an efficient blockade of the ports of those States will therefore also be established.

In witness whereof I have hereunto set my hand and caused the seal of the United States to be affixed.

Done at the city of Washington this 27th day of April, A. D. 1861, and of the Independence of the United States the eighty-fifth.

[L. S.] ABRAHAM LINCOLN.

By the President:

WILLIAM H. SEWARD, *Secretary of State.*

Order of the Secretary of the Navy to Flag-Officer Stringham, U. S. Navy, appointed to command the blockading squadron, to hoist his flag at the fore-masthead.

NAVY DEPARTMENT, *May 1, 1861.*

SIR: Having been over fifty years in the service, and nearly twenty as a captain, you will hoist your flag at the fore instead of at the mizzen of the *Minnesota.*

The Department in this instance suspends its general order of May 18, 1858, on the ground of your having seen nearly the requisite service as a captain in the Navy, and as an honor to the commander of the Coast Blockading Squadron.

I am, respectfully, etc.,

GIDEON WELLES.

Flag-Officer S. H. STRINGHAM, U. S. Navy,
Boston.

Instructions of the Secretary of the Navy to Flag-Officer Stringham, U. S. Navy, appointed to command the Coast Blockading Squadron, regarding the blockade of Southern ports.

Confidential.] NAVY DEPARTMENT, *May 1, 1861.*

SIR: The President, by proclamation of 19th April, 1861, ordered a blockade of the ports within the States of South Carolina, Georgia, Alabama, Florida, Mississippi, Louisiana, and Texas; and by a supplemental proclamation of the 27th April, 1861, he extends the blockade so as to include the ports of Virginia and North Carolina. In pursuance of the laws of the United States and of the law of nations, in such cases provided, it becomes necessary that a competent force be posted so as to prevent the entrance and exit of vessels from the ports aforesaid.

All these acting appointments, excepting those who have held commissions in the Navy, are to be subjected to such examination as the commandant of the station can conveniently arrange, so that persons not fully competent in every respect may be at once rejected.

Persons serving on board of the vessels when chartered will be appointed to the above-mentioned places, if qualified, upon being nominated to the Department.

All communications should be addressed to the Secretary of the Navy.

I am, respectfully, your obedient servant,

GIDEON WELLES.

Order of the Secretary of the Navy to Lieutenant Trenchard, U. S. Navy, commanding steamer Keystone State, to proceed to New York for the examination of that vessel as to availability for naval use.

NAVY DEPARTMENT, *May 16, 1861.*

SIR: After receiving on board the steamer *Keystone State* the munitions, etc., to be shipped to New York, you will proceed with her to that port.

The Department has directed Commodore Breese to have the *Keystone State* examined as to her availability for naval purposes. When the examination is completed, you will return with her to the navy yard, Washington, bringing such provisions, etc., as are ready to be shipped to this point.

You will take charge of any mail or other matter now at the Washington yard intended for the squadron in Hampton Roads and deliver it.

Flag-Officer Stringham has been directed to aid, as far as in his power, sundry refugees from Norfolk in obtaining a conveyance to New York. You will communicate with him on the subject at Hampton Roads and afford a passage to New York to any of the refugees that he may direct.

I am, respectfully, your obedient servant,

GIDEON WELLES.

Lieutenant S. D. TRENCHARD,
Commanding Steamer Keystone State, Washington, D. C.

Letter from the Secretary of the Navy to Flag-Officer Stringham, U. S. Navy, commanding Coast Blockading Squadron, transmitting list of steamers employed about Charleston, S. C.

NAVY DEPARTMENT, *May 16, 1861.*

SIR: I herewith enclose a statement of the number and character of vessels said to be employed about Charleston; also additional tidal data of the Chesapeake Bay.

I am, respectfully, your obedient servant,

GIDEON WELLES.

Flag-Officer S. H. STRINGHAM,
Comdg. Blockading Squadron, Hampton Roads, Virginia.

[Enclosure.]

BOSTON, *May 11, 1861.*

SIR: I was at Charleston, S. C., a few weeks since and ascertained the number and kind of steamers owned and employed there, and

thinking it might possibly be of service to the Department to know (I have since my return been informed by a reliable party) that the following vessels are now in that port:

Steamer *Nashville*, about 1,500 tons, side-wheel.
Steamer *Isabel*, about 1,000 tons, side-wheel, strong boat.
Steamer *Cahaba*, about 700 tons, side-wheel.
Steamer *Magordon*, about 700 tons, side-wheel.
Steamer *Carolina*, about 700 tons, side-wheel.
Steamer *William Seabrook*, about 700 tons, side-wheel.
Steamer *Emma*, about 350 tons, side-wheel, new boat.
Steamer *Cecil*, about 500 tons, side-wheel.
Steamer *General Clinch*, about 250 tons, side-wheel.
Steamer *Nino*, about 200 tons, tugboat.
Steamer *Lady Davis*, about 250 tons, tugboat.

Hoping the above may be of service to you, I remain, your obedient servant,

HARRISON LORING.

Hon. GIDEON WELLES,
Secretary U. S. Navy, Washington, D. C.

Letter from Flag-Officer Pendergrast, U. S. Navy, commanding Home Squadron, to Lieutenant-Colonel De Russy, U. S. Army, regarding use of tug.

U. S. FLAGSHIP CUMBERLAND,
Off Fortress Monroe, Va., May 16, 1861.

SIR: Your communication * of this date has been received. You can have the tug for the purposes you wish.

I will make your wish known to Flag-Officer Stringham.

Very respectfully, your obedient servant,

G. J. PENDERGRAST,
Flag-Officer, Commanding Home Squadron.

Lieutenant-Colonel DE RUSSY,
Corps of Engineers, U. S. Army.

Order of the Secretary of the Navy to Flag-Officer Stringham, U. S. Navy, changing the name of his squadron to Atlantic Blockading Squadron, and designating the vessels of his command.

Confidential.] NAVY DEPARTMENT, *May 17, 1861.*

SIR: The name of your squadron will be the Atlantic Blockading Squadron, and will be composed of the following-named vessels, viz:

Minnesota, *Cumberland*, *Perry*, *Harriet Lane*, *Dawn*, *Monticello*, *Union*, *Reliance*, *Resolute*, *Daylight*, *Mount Vernon* (to return from the Gulf), *Penguin*, *Albatross*, *Wabash*, and Commander Ward's flotilla.

I am, very respectfully, etc.,

GIDEON WELLES,
Secretary Navy.

Flag-Officer S. H. STRINGHAM,
Hampton Roads.

---

* Not found.

Order of the Secretary of the Navy to Flag-Officer Pendergrast, U. S. Navy, changing the name of his squadron to West India Squadron, and designating vessels of his command.

Confidential.] NAVY DEPARTMENT, *May 17, 1861.*

SIR: The name of your squadron will be the West India Squadron, and will be composed of the following-named vessels, viz:

Roanoke, Macedonian, Bainbridge, Vandalia.

I am, very respectfully, your obedient servant,

GIDEON WELLES.

Flag-Officer G. J. PENDERGRAST,
Hampton Roads.

Report of Flag-Officer Pendergrast, U. S. Navy, commanding West India Squadron, regarding flagship Roanoke.

U. S. FLAGSHIP CUMBERLAND,
Off Fortress Monroe, Va., May 17, 1861.

SIR: I have the honor to acknowledge the receipt of the Department's letter, under date of May 15, informing me that the steam frigate *Roanoke* was fitting out at New York as my flagship, and desire to express to the Department the great satisfaction the receipt of that letter gave me.

I would also state that if the *Cumberland* sustained any injury to her copper in forcing her way over the obstructions in Hampton Roads, it is very desirable that she should be docked next month, as the worms commence their depredations in the first part of June.

I have the honor to be, sir, very respectfully, your obedient servant,

G. J. PENDERGRAST,
Flag-Officer, Commanding Home [West India] Squadron.

Hon. GIDEON WELLES,
Secretary of the Navy, Washington, D. C.

Report of Flag-Officer Pendergrast, U. S. Navy, commanding West India Squadron, regarding fresh-water supply.

U. S. FLAGSHIP CUMBERLAND,
Off Fortress Monroe, Va., May 17, 1861.

SIR: I have the honor to inform the Department that I have made enquiries in relation to fresh water, and find outside of the fortress about 130,000 gallons in cisterns and about 40,000 gallons on the Rip Raps, and within the fort about 125,000 gallons; in addition to this, wells could be sunk in the fort, from which a considerable supply could be had.

I would also state that in the direction of Hampton and within range of the guns of the fort an unlimited supply of good water can be had for the use of the squadron and fortress from wells.

Mr. Edward Clayton, of No. 134 Lee street, Baltimore, has offered to the commandant of the fort to supply good water at the rate of 1,000 to 50,000 gallons per day if tanks or casks were furnished him for that purpose, if the Department so desires it.

I would also state that the land in and around the fort being of sand is such that wells could be sunk anywhere and good water procured.

If the Department should make enquiries and find Mr. Clayton (who is connected with the Baltimore waterworks) to be a reliable man, and tanks were furnished him, with the assistance of a steamer, this place could be supplied with an abundance of good water at all times.

I have not seen Mr. Clayton, and therefore can not state his terms.

I have the honor to be, very respectfully, sir, your obedient servant,

G. J. PENDERGRAST,
Flag-Officer, Commanding Home [West India] Squadron.

Hon. GIDEON WELLES,
Secretary of the Navy, Washington, D. C.

[Endorsement.]

I have been here so short a time that I am unable to give any opinion on the above subject.

Respectfully forwarded.

S. H. STRINGHAM,
Senior Flag-Officer.

Report of Flag-Officer Stringham, U. S. Navy, commanding Atlantic Blockading Squadron, giving the names of captured vessels.

U. S. S. MINNESOTA,
Hampton Roads, May 17, 1861.

SIR: I have the honor to inform the Department that since my arrival here I have captured the following vessels, some of which are now here, others dispatched under charge of officers:

Ship *Argo*, from Richmond, with tobacco; sent to New York in charge of Midshipman McCook.

Schooner *Almira Ann*, from Chickahominy River, with ship timber, which, being very much needed at Fortress Monroe for building platforms, etc., I have ordered to be discharged for the use of this fort.

Schooner *Emily Ann*, from Richmond, with tobacco.

Schooner *Mary Willis*, from Richmond, with tobacco.

Schooner *Delaware Farmer*, from Richmond, with tobacco.

The three schooners last above named I have sent to Philadelphia, in charge of Lieutenant N. C. Bryant, to be delivered over by him to the U. S. district judge, with further orders to report his arrival to the Department.

Ship *North Carolina*, from Havre, in ballast, bound to Norfolk, Va., and there owned, I have placed in charge of Lieutenant J. G. Mitchell, with orders to proceed to New York.

Schooner *J. H. Etheridge*, from Petersburg, Va.; cargo, tobacco.

Schooner *Mary*, from Richmond, Va.; cargo, tobacco.

Schooner *William and John*, from Petersburg, Va.; cargo, tobacco.

Schooner *Industry*, from Richmond, Va.; cargo, hay and steam boiler.

Schooner *William Henry*, from Richmond, Va.; cargo, tobacco.

Schooner *Belle Conway*, from Richmond, Va.; cargo, tobacco.

The last six named schooners will be sent to Philadelphia as soon as possible, to be delivered into custody of the proper judicial authority, with the exception of the schooner *Industry*, whose cargo I have ordered to be discharged for the use of Fortress Monroe, after which, from the

very insignificant value of the schooner herself from age and general decay, I shall allow the captain to depart with her.

All the above vessels have been captured by me for attempting to violate the blockade, which has been fully established here and of which notice has been given.

Respectfully, your obedient servant,

S. H. STRINGHAM,
Senior Flag-Officer Blockading Squadron.

Hon. GIDEON WELLES,
Secretary of Navy.

Report of Flag-Officer Stringham, U. S. Navy, commanding Atlantic Blockading Squadron, acknowledging Department's communications.

U. S. S. MINNESOTA,
Hampton Roads, May 17, 1861.

SIR: I have the honor to acknowledge the receipt of yours dated Navy Department, May 11, 1861, with the enclosed copy of petition of sundry refugees from Norfolk, to the President. I will endeavor fully to carry out the wishes of the President as expressed in your letter of the 11th.

I also acknowledge receipt of yours of May 14, enclosing copy of letter from Commodore Breese of May 11.

Respectfully, your obedient servant,

S. H. STRINGHAM,
Senior Flag-Officer Blockading Squadron.

Hon. GIDEON WELLES,
Secretary of Navy.

Report of Flag-Officer Stringham, U. S. Navy, commanding Atlantic Blockading Squadron, requesting instructions regarding disposition of small captured vessels.

U. S. S. MINNESOTA,
Hampton Roads, May 17, 1861.

SIR: I should be pleased to receive instructions from you in regard to vessels which are disposed to violate the blockade, yet are too small and worthless to go to the expense of sending as prizes, yet which may be used to convey troops and munitions from point to point in these waters.

With your authority I will act according to my best judgment and under surveys as to their being worthy to be sent forward as prizes or destroyed. Or shall I send them to the nearest point, Baltimore?

Respectfully, your obedient servant,

S. H. STRINGHAM,
Senior Flag-Officer Blockading Squadron.

Hon. GIDEON WELLES,
Secretary of Navy.

Report of Flag-Officer Stringham, U. S. Navy, commanding Atlantic Blockading Squadron, of the capture of bark Star.

U. S. S. MINNESOTA,
Hampton Roads, May 17, 1861.

SIR: I have the honor to inform the Department that I have just seized the American bark *Star*, from Richmond, bound to Bremen, tobacco loaded.

I shall send her forward to New York as a prize.

Respectfully, your obedient servant,

S. H. STRINGHAM,
Senior Flag-Officer Blockading Squadron.

Hon. GIDEON WELLES,
Secretary of Navy.

Order of the Secretary of the Navy to Captain Mercer, U. S. Navy, commanding U. S. S. Wabash, to report for duty in Hampton Roads.

NAVY DEPARTMENT, *May 17, 1861.*

SIR: The U. S. steam frigate *Wabash*, under your command, is to form a part of the Coast Blockading Squadron, of which Captain S. H. Stringham is the flag-officer.

As soon, therefore, as she is prepared for this service, and in all respects ready for sea, you will proceed with her to Hampton Roads, Virginia, and report to Flag Officer Stringham for further instructions.

Before your departure from New York, transmit to the Department a muster roll of the *Wabash*, and a separate list of her officers.

I am, respectfully, your obedient servant,

GIDEON WELLES.

Captain SAMUEL MERCER,
Commanding U. S. Steam Frigate Wabash, New York.

Report of Flag-Officer Stringham, U. S. Navy, commanding Atlantic Blockading Squadron, of the arrival at Hampton Roads of U. S. vessels Perry and Keystone State.

U. S. S. MINNESOTA,
Hampton Roads, May 18, 1861.

SIR: I have the honor to inform the Department (through the medium of the steamer *George Peabody*, which only touches here for a very short [time] on her way to Washington) that the brig *Perry* and steamer *Keystone State* have arrived but this moment.

Respectfully, your obedient servant,

S. H. STRINGHAM,
Senior Flag-Officer Blockading Squadron.

Hon. GIDEON WELLES,
Secretary Navy.

Report of Flag-Officer Pendergrast, U. S. Navy, commanding West India Squadron, making suggestions in view of change of flagship.

U. S. FLAGSHIP CUMBERLAND,
Off Fortress Monroe, Va., May 18, 1861.

SIR: As the steam frigate *Roanoke* has been ordered as my flagship I respectfully suggest to the Department that I be authorized to send this ship to New York under Captain Marston for the double purpose of having her bottom examined, and that the officers and crew of this ship may be transferred to the *Roanoke*. I would also state to the Department that in case Flag-Officer Stringham should leave here, I can transfer my flag to any one of the vessels composing the blockading squadron, or take up my residence at Fortress Monroe, and superintend the blockade of the ports of Virginia under general instructions from Flag-Officer Stringham. I would also avail myself of this opportunity to state that no paymaster has yet arrived here, and it is indispensable for the comfort of the officers and crew that one should be sent here with as little delay as possible, and before this ship sails for New York. I would also respectfully request that Commander J. B. Marchand be ordered to the Home Squadron as captain of the fleet and inspector of ordnance.

I have the honor to be, very respectfully, sir, your obedient servant,

G. J. PENDERGRAST,
Flag-Officer, Commanding Home [West India] Squadron.

Hon. GIDEON WELLES,
Secretary of the Navy, Washington, D. C.

Instructions of Flag-Officer Stringham, U. S. Navy, commanding Atlantic Blockading Squadron, to Lieutenant Parrott, U. S. Navy, commanding U. S. brig Perry, to blockade the harbor of Fernandina, Fla.

U. S. S. MINNESOTA,
Hampton Roads, May 18, 1861.

SIR: Herewith find enclosed copies of the proclamations of the President of the United States in reference to blockading.

You will proceed off the harbor of Fernandina, Fla., and the mouth of St. Mary's River.

I wish to impress upon you the importance of maintaining a strict blockade, preventing the ingress and egress of all vessels, excepting under the following exception:

NAVY DEPARTMENT, *May 4, 1861.*

The Department would in every instance allow at least fifteen days for neutral vessels to depart, with or without cargo, after the blockade is set with sufficient force.

You will not capture or detain any foreign vessel proceeding toward the entrance of a blockaded port if she shall not previously have received from one of the blockading squadron a special notification of the existence of the blockade, provided she has not contraband goods on board.

This notification must be inserted in writing on the muster roll of the neutral vessel by the cruiser which meets her, and it should contain the announcement, together with statements of the day and the latitude and longitude in which it was made.

Wishing you a pleasant voyage, I am, respectfully, your obedient servant,

S. H. STRINGHAM,
Senior Flag-Officer Blockading Squadron.

Lieutenant Commanding ENOCH G. PARROTT,
U. S. Brig Perry.

Order of Flag-Officer Stringham, U. S. Navy, commanding Atlantic Blockading Squadron, to Lieutenant Parrott, U. S. Navy, commanding U. S. brig Perry, regarding provisions and water for his vessel.

U. S. S. MINNESOTA,
Hampton Roads, May 18, 1861.

SIR: After cruising off the harbor of Fernandina until you get nearly out of provisions and water and you find no opportunity to supply yourself there, you can return to this place to obtain supplies or to Key West. I desire you to remain as long as possible on your cruising ground, and if there is any way of obtaining supplies of wood and water there, you will do so.

You will take all means in your power to make known the establishment of the blockade. If you have opportunity to communicate with me from time to time, please do so.

Respectfully, your obedient servant,

S. H. STRINGHAM,
Senior Flag-Officer Blockading Squadron.

Lieutenant Commanding ENOCH G. PARROTT,
U. S. Brig Perry.

Instructions from the Secretary of the Navy to Flag-Officer Stringham U. S. Navy, commanding Atlantic Blockading Squadron, regarding matters pertaining to his command.

NAVY DEPARTMENT, *May 18, 1861.*

SIR: Your letters of the 15th and 17th instant have been received.

Protection to certain citizens in the insurgent States has been from time to time enjoined by the President. In relation to the disposition of the persons whom you may capture, much must from the necessity of the case be submitted to your own good judgment, in which the Department has full confidence.

Perhaps Baltimore, although the nearest port, may not be the best to which to send the vessels that fall into your hands.

There will doubtless be many cases involving new questions that you may find it difficult to decide, but the courts of admiralty must dispose of them, having the facts submitted. It is desirable that a rigid and efficient blockade should be enforced at every point committed to your jurisdiction at the earliest possible moment. The Department has decided to purchase the steam tug *Yankee*, now employed in and about Hampton Roads. The officers, crew, and engineers now serving on board are to continue and will be paid by her present owners up to the 25th of this month, inclusive, when you will make such temporary

appointments for the *Yankee* as she may require. The conditions stated in the copy of instructions sent to you on the 16th instant refer rather to the large purchased and chartered vessels. Such as the *Yankee* will not require so many officers, and it is left to your discretion to arrange them.

It is proposed by the owners of certain bay steamers to run their boats between Baltimore and Fortress Monroe, carrying the mail and affording fresh supplies, provided, in your opinion, the strict requirements of the blockade are not interfered with. You may permit this arrangement, giving the necessary orders to the various commanders not to interfere with the vessels. All the boats and steamers armed in the Chesapeake are under your command, and are to be disposed of so as best to accomplish the objects intended.

Major-General Butler, with a large force, will be ordered to Hampton Roads, and you will communicate and cooperate with him.

I am, respectfully, your obedient servant,

GIDEON WELLES.

Flag-Officer S. H. STRINGHAM,
Comdg. Atlantic Blockading Squadron, Hampton Roads, Virginia.

Order of the Secretary of the Navy to Flag-Officer Stringham, U. S. Navy, commanding Atlantic Blockading Squadron, regarding cargo of schooner H. N. Farnham.

NAVY DEPARTMENT, *May 18, 1861.*

SIR: Herewith you will receive a copy of a letter which was transmitted to the Secretary of the Treasury and forwarded by him to the Secretary of State, who has communicated the same to this Department with a recommendation that "in view of the facts and circumstances as represented in the documents, the commander of the blockading squadron in that quarter be instructed to allow the property to leave Norfolk on its way to its original destination."

In pursuance of this recommendation you will permit Mr. Albert Adams, the authorized agent of the parties, to pass the property specified.

I am, respectfully, your obedient servant,

[GIDEON WELLES.]

Flag-Officer S. H. STRINGHAM,
Commanding Atlantic Blockading Squadron, Hampton Roads.

[Enclosure No. 1.]

CUSTOM-HOUSE, COLLECTOR'S OFFICE,
Boston, May 14, 1861.

SIR: Albert Adams, esq., the bearer of this letter, is on his way to Norfolk, Va., for the purpose of obtaining and sending forward a part of the cargo of schooner *H. N. Farnham*, heretofore unlawfully detained at that port, but which is now ready to be given up. He desires permission to export it thence to this or some other Northern port, and such permission I trust you will give him.

Mr. Adams will present to you a statement of this case drawn up by John S. Tyler, esq., of this city, which I have examined and which I I am satisfied is perfectly correct. The parties to whom the property

is consigned are well-known merchants of this city, and the nature of most of the property is such that unless it comes forward very soon the result will be nearly or quite a total loss.

Mr. Adams himself is a loyal man and entirely reliable.

Very respectfully, your obedient servant,

J. Z. GOODRICH,
Collector.

Hon. S. P. CHASE,
Secretary of the Treasury, Washington.

[Enclosure No. 2.]

BOSTON, *May 14, 1861.*

SIR: I have the honor to represent to you, in behalf of the owners and master of the schooner *H. N. Farham*, that said vessel [sailed] from Wilmington, in the State of North Carolina, on or about the 29th of March, 1861, with a cargo of cotton, pitch, spirits turpentine, lumber, and peanuts, bound for this port; that on the 2d of April following she sustained damages in gales of wind, which caused her to leak and made it necessary to put into port for repairs; that she did put into the port of Norfolk, and there discharge her whole cargo and undergo repairs; that after the repairs were made part of the cargo was taken in, but before the lading was completed the vessel was forcibly seized by persons claiming to act under the authority of the State of Virginia, and holes bored in her bottom for the purpose of sinking her in the channel way; that this intention was abandoned and the vessel restored to the master, who immediately left Norfolk with that part of the cargo then on board, and arrived at this port the 28th of April ultimo.

On discharging the cargo and comparing the quantity delivered with the quantity shipped, it appears that the following-described merchandise was left at Norfolk, viz:

One hundred and eighty-eight barrels of spirits turpentine, consigned to Frederic Kidder & Co.; 50 barrels of spirits turpentine, consigned to Thomas Simmons & Co.; 3 barrels of spirits turpentine, consigned to Stimson, Valentine & Co.; 59 barrels spirits turpentine, consigned to Charles Smith; 77 barrels spirits turpentine and 49 bales cotton, consigned to H. C. Thacker; 53 bags peanuts, consigned to P. G. Munro; 35,059 feet lumber consigned to Edward D. Peters & Co.

All of which said property is now at Norfolk, and the parties concerned therein propose to send Albert Adams, esq., to Norfolk, with instructions to obtain said property and reship the same.

Now, the parties concerned, in view of the disturbed condition of affairs, deem it important to obtain from the Government of the United States special instructions to the officers at and near Norfolk that said cargo be permitted to pass over to Fort Monroe and by water to some Northern port or place, and to this end they beg that you will furnish Mr. Adams a letter of introduction to the Secretary of the Treasury, that he may procure such instructions as may be deemed needful and expedient.

Respectfully, your obedient servant,

JOHN S. TYLER.

Hon. J. Z. GOODRICH,
Collector of Boston.

Engagements of the U. S. steamers Monticello and Thomas Freeborn with the Confederate battery at Sewell's Point, Va., May 18 and 19, 1861.

Report of Flag-Officer Stringham, U. S. Navy, commanding Atlantic Blockading Squadron.

U. S. S. MINNESOTA,
Hampton Roads, May 19, 1861.

SIR: I have the honor to report to the Department that Captain J. H. Ward arrived here yesterday in company with two small schooners and a very small steam tug, in addition to the one commanded by himself. About the time of his arrival I heard and saw firing from Captain Eagle's vessel, the *Star* [*Monticello*], now actively blockading the mouths of James and Elizabeth rivers. I immediately ordered Captain Ward to go up to him. He found a battery being erected by the rebels from Norfolk, which, with the aid of the *Star* [*Monticello*], was partially destroyed.

Captain Eagle is very vigilant in the performance of his duty on that station.

I yesterday had the honor of a visit from Senators Wade, Chandler, and Morrill, with some gentlemen traveling in their company. They desiring to return direct to Washington, I ordered Captain Ward to convey them in his steamer, with further orders to look in at the mouths of the Virginia rivers on his way up and down, and to return to this place as soon as possible. I hope this will meet your approval.

This afternoon (Sunday), about 5:30 p. m., Captain Eagle, in the *Star* [*Monticello*], again opened fire upon the battery referred to above with a heavy gun and a small one (he only carries two), and fired with promptness and spirit until he exhausted his ammunition, when he returned to this ship.

I shall supply him with ammunition, and in the morning he will proceed to his original blockading station.

I have the honor to enclose to the Department a copy of the report of Captain Henry Eagle, commanding U. S. S. *Star* [*Monticello*].

Respectfully, your obedient servant,

S. H. STRINGHAM,
Senior Flag-Officer Blockading Squadron.

Hon. GIDEON WELLES,
Secretary of Navy.

[Enclosure.]

U. S. S. STAR [MONTICELLO], *May 19, 1861.*

SIR: From the time I reported to you yesterday I kept a strict watch on the movements of the enemy in and about the Sewell's Point battery. Several noises were heard during the night, but not distinct enough for me to trace them. At 5:30 p. m. I heard distinct blows, as if from an ax, securing timber platforms for gun carriages inside of the embrasures, and immediately I ordered a shot to be fired over them. The rebels immediately hoisted a white flag, with some design on it, and fired a shot that cut the fore-spencer vangs near the gaff. I immediately went to quarters and returned their fire, which was continued by them. I expended 15 stand of grape, 12 10-inch shot, 32 10-inch shell, 10 shell for 32-pounders, and 45 32-pound shot, making a total of 114 shots, which I think did some execution among the rebels. I only desisted for want of ammunition, having only 5 8-pound charges remaining for the pivot gun. I regret that want of ammunition compelled me to retire, as I am satisfied I could have silenced the battery

in a short time. I can not too highly praise the courage and patriotism of the officers and men under my command. They acted nobly and with great coolness, as the repeated firings, as above, will show. The action continued from 5:30 p. m. to 6:45 p. m., a duration of one hour and fifteen minutes. The battery is masked, thirteen embrasures having been erected behind a sand bank. The rebels had three rifled cannon and fired several volleys of minie balls, which struck the ship. The ship was struck five times by rifled cannon shot in the hull and upper works. The damage can be repaired by ourselves. I herewith enclose the report of the medical officer of this ship, by which you will perceive that two men were slightly wounded during the action.

I can not close this communication without calling the attention of the flag-officer to the valuable services of Lieutenant Daniel L. Braine, who had charge of our pivot, and who, during the whole action, displayed great coolness and skill in its management.

Very respectfully, your obedient servant,

HENRY EAGLE,
Captain, and Commanding U. S. S. Star [*Monticello*].

Flag-Officer S. H. STRINGHAM,
Commanding Home Squadron, Frigate Minnesota.

Report of Lieutenant Braine, U. S. Navy, U. S. S. Monticello, regarding duty performed by him on board the U. S. S. Thomas Freeborn.

U. S. S. MONTICELLO,
Hampton Roads, May 22, 1861.

SIR: In compliance with your request that I render you a statement in writing of the part which the steamer *Thomas Freeborn* took in firing into an unfinished battery above Sewell's Point, I have to state that after we had fired a number of times from the U. S. S. *Monticello*, the steamer *Thomas Freeborn* came along and Commander Ward came on board. I went with him in his boat to the *Thomas Freeborn*, and took the vessel at his request in as close to the earthworks as I thought necessary. Commander Ward then fired a number of shot from his forward gun, a heavy 32-pounder, which did some slight injury to the embrasures. There were some twelve or fourteen shots fired in all, and the *Thomas Freeborn* then withdrew from her position and returned to Hampton Roads. While on board the *Freeborn*, I did not see any armed men in the battery nor any pieces of ordnance.

I am, respectfully, your obedient servant,

D. L. BRAINE,
Lieutenant, Commanding.

Captain HENRY EAGLE, U. S. Navy.

Report of commandant navy yard, Washington, giving results of examination of fragments of shell extracted from the U. S. S. Monticello.

COMMANDANT'S OFFICE, NAVY YARD,
Washington, May 30, 1861.

SIR: I have just examined the fragments of a shell from the rifled gun at Sewell's Point that lodged in the *Monticello*, late *Star*, from which I find the following:

First. The gun has the bore of a 3-pounder and the shell weighed probably 5 to 7 pounds.

Second. The shell is made of the kind patented by Dr. Reed, of Alabama, and now owned principally by Mr. Parrott, of Cold Spring.

Third. I have tried this kind to some extent, and know that they are not very accurate, though useful in some particular cases.

Fourth. The sand bank in front of these guns alone prevented the 10-inch shells of the *Monticello* (distant half a mile) from entirely destroying the battery.

Fifth. The *Monticello* was in no material danger from shells so small, as regards her hull, but they would have been serious to her boilers.

I have the honor to be, very respectfully, your obedient servant,

JNO. A. DAHLGREN,
Commandant.

Hon. GIDEON WELLES,
Secretary of the Navy.

Reports of Brigadier-General Walter Gwynn, C. S. Army, commanding at Norfolk.

NORFOLK, VA., *May 20, 1861.*

The enemy fired on the unfinished battery at Sewell's Point on the 18th, but did no damage. There were at that time no guns mounted or nearer than Norfolk. I sent forward three guns immediately and two of the rifled cannon. Got them in position at 5 p. m. on the 19th. Soon after the enemy opened fire, which was returned and kept up one and a half hours, when the vessel from which the guns were fired withdrew. A fuller report will be made to-morrow. Just returned from Sewell's Point. Reports in from the pickets at all points.

No immediate attack apprehended. Troops thrown forward and in position. Confident of making defense good. I am strengthening to some extent my position. Want 600 laborers, and am reenforcing the batteries, which takes off so many men that additional troops are required.

WALTER GWYNN.

R. S. GARNETT,
Adjutant-General Virginia Forces.

HEADQUARTERS FORCES OF VIRGINIA AROUND NORFOLK,
May 20, 1861.

SIR: I have the honor to inform you that late in the evening of the 18th instant I received intelligence of an attack made by the enemy's steamer *Monticello* on the unfinished works at Sewell's Point. This battery was not sufficiently advanced at the time to receive its armament and garrison. The *Monticello* carried three guns, one of which was a heavy 10-inch Dahlgren. With these she kept up a constant fire with solid shot and shell for more than an hour, when a steam tug from Old Point carrying one gun came to her aid, and the two vessels continued the cannonade until the close of the day without any serious injury to the works. The tug then returned to Old Point, and the *Monticello* moored, with broadside on, with the intention, apparently, of continuing the attack, in order to demolish the works or prevent their progress. Early on the morning of the 19th I hurried on the guns and equipment, and repaired to Sewell's Point, to expedite the works for their reception, and by 5 p. m. succeeded in getting three 32-pounders and two small rifled guns into position, while detachments of

infantry and artillery, ordered from neighboring posts, occupied the battery and contiguous points. During all this time the *Monticello*, apparently not suspecting the operations going forward, was engaged in preparing for another effort, by calculating the range and distance and adjusting her guns to suit. With instructions to Captain Colquitt, of Georgia, to whom I gave command of all the forces and guns at the post, to continue the preparations, reserving his fire until the enemy renewed the cannonade, I returned to Norfolk. At 5:30 o'clock the *Monticello* again opened fire from all her guns, and with much greater precision than on the preceding day. It was instantly returned and with such effect that she was driven off and returned to Old Point. The engagement continued for an hour and a half without intermission on either side, and, though the enemy's fire was well directed, one shell bursting within an embrasure and several others directly over the battery, while solid shot repeatedly passed through the embrasures and struck the crest and sides of the merlons, hurling masses of earth from the outside among the gunners, I am happy to inform you that no casualty of moment occurred to the troops, nor was material injury done to the battery. What damage or loss was sustained by the enemy I was not able to discover, but his retreat indicated that our fire had become too warm for further endurance. As early as I received information of the second attack and repulse, I ordered forward more troops and hastened during the night to Sewell's Point to make such other dispositions as might be necessary to defend the post against any further and more formidable assaults which the enemy's large naval and military forces at Old Point would enable him to make.

I can not close this brief account of the engagement without expressing my admiration of the enthusiasm and bravery manifested by the troops. Where officers and men displayed so much merit it would be invidious to discriminate, and I therefore refer you to the accompanying report of Captain Colquitt for further particulars. His position, as commanding officer of the post, gave him an opportunity of displaying the qualities which adorn the soldier, and the general appreciation of his gallantry and merit by those under his command enable me to commend him most warmly to your consideration.

In conclusion, I would state that, in consequence of the want of a Virginia or Confederate flag for the occasion, the flag of Georgia, belonging to Captain Colquitt's company, was planted on the ramparts during the engagement, and, while the hottest fire was prevailing, two members of his company, whose names I will forward you when reported to me as deserving particular notice, fearlessly passed to the outside of the battery and deliberately removed the sand and other obstructions to the range of one of the guns while shot and shell were striking all about them.

I am, general, very respectfully, your obedient servant,

WALTER GWYNN.

Major-General LEE,
Commanding Forces of Virginia, Richmond, Va.

Report of Captain Peyton H. Colquitt, C. S. Army, commanding at Sewell's Point.

SEWELL'S POINT, VA., *May 19, 1861.*

SIR: I have the honor to report to you an engagement this evening between the Confederate troops, consisting of the City Light Guards,

Columbus, Ga.; Woodis Rifles, Captain Lamb; detachment of the Norfolk Juniors, under Lieutenant Holmes; detachment of Light Artillery Blues, under Lieutenant Nash, all under my command, and the steamer *Monticello* and Federal steam tug, which lasted for one hour and a half, in which nobody was hurt on our side. The enemy fired with great accuracy, several balls passing through the embrasures of the fort, one striking a 32-pounder within the battery, and one shell bursting in the fort. From three to five shots from our battery took effect, we think; others struck around the steamer. The troops acted with great bravery, and I had to restrain them in their enthusiasm. The flag of Georgia was hoisted over the fort in the absence of the Confederate flag. Our firing was less frequent than that of the enemy, as our ammunition was scarce; only two rounds left after the engagement. Your aids, Major William E. Taylor, R. R. Collier, and Colonel Thomas Newton, were present and aided in the struggle.

I have the honor to be, your obedient servant,

PEYTON H. COLQUITT.

Major-General GWYNN.
Commanding Forces, Norfolk Harbor.

P. S.—Two members of the City Light Guards (Georgia) dug away the sand in front of one of the portholes during the hottest of the fire.

Report of Flag-Officer Stringham, U. S. Navy, commanding Atlantic Blockading Squadron, suggesting service for U. S. sloop Cumberland.

U. S. S. MINNESOTA,
Hampton Roads, May 19, 1861.

SIR: In forwarding Flag-Officer Pendergrast's communication * of May 18, 1861, to the Department, I take the liberty of making a single suggestion in reference to the disposition of the *Cumberland*, growing out of the fact of the certain presence of large steamers at Charleston, as per communication containing list of vessels as furnished by Mr. H. Loring, of Boston, to the Department.

I respectfully suggest, if the Department sees fit to comply with Commodore Pendergrast's suggestions of taking up his quarters at Fortress Monroe (to which I see no objection), that the *Cumberland*, instead of going immediately to New York, be first sent off Charleston (where only the small steamer *Harriet Lane* now is) to cruise until she can be relieved by one of the large vessels daily expected to report here for service, after which the *Cumberland* might proceed to New York.

I inferred from your communication of May 4, 1861, that I might employ the *Cumberland* on blockading duty, but only at this port, and therefore my suggestion.

Very respectfully, your obedient servant,

S. H. STRINGHAM,
Senior Flag-Officer Blockading Squadron.

Hon. GIDEON WELLES,
Secretary of Navy.

---

* See p. 640.

United States Steamer Quaker City.

Order of Flag-Officer Stringham, U. S. Navy, commanding Atlantic Blockading Squadron, to Captain Van Brunt, U. S. Navy, commanding U. S. S. Minnesota.

U. S. S. MINNESOTA,
Hampton Roads, May 24, 1861.

SIR: You will have the *Minnesota* ready for sea as soon as possible, and report to me when she is ready.

Respectfully, your obedient servant,

S. H. STRINGHAM,
Flag-Officer, Atlantic Blockading Squadron.

Captain G. J. VAN BRUNT.

Order of the Secretary of the Navy to Flag-Officer Stringham, U. S. Navy, commanding Atlantic Blockading Squadron, to furnish duplicate instructions to prize masters.

NAVY DEPARTMENT, *May 24, 1861.*

SIR: When prizes are taken and placed in charge of prize masters for conveyance to any prize court, you will furnish the prize master with duplicate instructions, so that one copy may be deposited with the clerk of the district court to which the prize may be sent.

I am, respectfully, your obedient servant,

GIDEON WELLES.

Flag-Officer S. H. STRINGHAM,
Comdg. Atlantic Blockading Squadron, Hampton Roads, Virginia.

Report of Flag-Officer Stringham, U. S. Navy, commanding Atlantic Blockading Squadron, regarding disposition of captured vessels Tropic Wind and Pioneer.

U. S. S. MINNESOTA,
Hampton Roads, May 25, 1861.

SIR: I have the honor to inform the Department that I have released the small vessels which were detained prior to the sixteenth day after instituting strict blockade.

I have sent the English schooner *Tropic Wind*, captured the twenty-first day after instituting blockade, to Washington.

The bark *Pioneer*, also captured after the expiration of full notice—cargo and vessel owned in Richmond—I have sent to New York.

Respectfully, your obedient servant,

S. H. STRINGHAM,
Flag-Officer, Atlantic Blockading Squadron.

Hon. GIDEON WELLES,
Secretary Navy.

Letter from Flag-Officer Stringham, U. S. Navy, commanding Atlantic Blockading Squadron, to Commodore Paulding, U. S. Navy, regarding chartered steamer Quaker City.

U. S. S. MINNESOTA,
Hampton Roads, May 25, 1861.

COMMODORE: In my letter to you of this date I forgot to mention the *Quaker City*, now doing most effective duty at Cape Henry.

I can not say too much for her. She has done and is doing most efficient service and can not well be spared. Her charter party expires to-day. I hope she will be retained, either by purchase or otherwise. If by charter, I think $500 or $600 per diem would be good allowance.

Colonel [Abram] Duryea's regiment of New York Zouaves has just arrived in steamer from New York.

Respectfully, your obedient servant,

S. H. STRINGHAM,
Flag-Officer, Atlantic Blockading Squadron.

Commodore H. PAULDING, *U. S. Navy.*

Order of Flag-Officer Pendergrast, U. S. Navy, commanding West India Squadron, to Acting Master Germain, U. S. Navy, commanding U. S. S. Yankee, regarding repairs to that vessel.

U. S. FLAGSHIP CUMBERLAND,
Off Fortress Monroe, Va., May 25, 1861.

SIR: On your arrival at Washington you will make known your wishes to the commandant of the navy yard as regards having the decks of the *Yankee* calked, and request him from me to have it done with as little delay as possible, as your services are much needed at this place.

You will return to Hampton Roads without delay.

Very respectfully,

G. J. PENDERGRAST,
Flag-Officer, Commanding West India Squadron.

Acting Master GERMAIN,
Yankee.

Letter from Flag-Officer Pendergrast, U. S. Navy, commanding West India Squadron, to the Chief of Bureau of Construction and Repair, regarding U. S. S. Yankee.

U. S. FLAGSHIP CUMBERLAND,
Off Fortress Monroe, Va., May 25, 1861.

SIR: I have sent the steam tug *Yankee* to the navy yard at Washington to have her decks calked, and hope you will give the necessary order for that purpose, as her services are much needed at this place.

I desire you also to send me a sloop of war's mooring swivel for the ship, and anything you have to send can come by the same conveyance.

Very respectfully, your obedient servant,

G. J. PENDERGRAST,
Flag-Officer, Commanding West India Squadron.

JOHN LENTHALL, Esq.,
Chief of the Bureau of Construction and Repair.

P. S.—The *Yankee* requires to be coppered, and if it can be done at the Washington yard I would like it done without delay.

G. J. PENDERGRAST.

Report of Flag-Officer Stringham, U. S. Navy, commanding Atlantic Blockading Squadron, regarding the steamer Uncle Ben and the capture of the bark Winfred.

U. S. S. MINNESOTA,
Hampton Roads, May 25, 1861.

SIR: I have the honor to acknowledge receipt of your communication* of May 23, in reference to steamer *Uncle Ben*, captured at Wilmington.

I shall give this matter in charge to Captain Eagle, of the *Monticello*, whom I have ordered to proceed and cruise off Wilmington as soon as the *Harriet Lane* returns, but as North Carolina has seceded they no doubt will consider her a lawful prize.

I have this morning taken possession of bark *Winfred*, from Rio de Janeiro, owned [in] and loaded for Richmond, Va. I shall send her direct to New York. I have received yours of 23d, with enclosed copy of letter from Captain McKean, of the *Niagara*.

Respectfully, your obedient servant,

S. H. STRINGHAM,
Flag-Officer, Atlantic Blockading Squadron.

Hon. GIDEON WELLES,
Secretary of Navy.

Report of Flag-Officer Pendergrast, U. S. Navy, commanding West India Squadron, of the sailing from Hampton Roads, Virginia, of Flag-Officer Stringham and Commander Ward, U. S. Navy.

U. S. FLAGSHIP CUMBERLAND,
Off Fortress Monroe, Va., May 25, 1861.

SIR: I have the honor to inform the Department that Flag-Officer Stringham sailed from here this day in the U. S. steam frigate *Minnesota*. Commander Ward has left here also and gone to the Potomac with his flotilla.

I have the honor to be, very respectfully, sir, your obedient servant,

G. J. PENDERGRAST,
Flag-Officer, Commanding West India Squadron.

Hon. GIDEON WELLES,
Secretary of Navy.

Report of Flag-Officer Pendergrast, U. S. Navy, commanding West India Squadron, urging the need of a paymaster and additional midshipmen.

U. S. FLAGSHIP CUMBERLAND,
Off Fortress Monroe, Va., May 25, 1861.

SIR: I have the honor to inform the Department that Lieutenant Crosby arrived here this morning and reported for duty on board this ship.

I would also again respectfully remind the Department that no paymaster has arrived, and that it is impossible to do without one much longer.

---

*See p. 662.

Lieutenant Stockton to board her and examine her. Lieutenant Stockton returned and reported that the ship was the American ship *A. B. Thompson*, of Maine, cleared at the port of Savannah by the deputy collector. Ordered Lieutenant Stockton to take a prize crew from the men of the *Lady Davis* and take charge of her. Requested Captain Elliott to pilot the ship into Port Royal, which request he acceded to. Captain Elliott went on board the ship in the capacity of pilot at my request. When we took Captain Elliott and his men on board we took their boat in tow at the same time. When Lieutenant Stockton boarded the ship, I think he boarded her in Captain Elliott's boat, or rather the boat in which they came on board. When Lieutenant Stockton first went on board he was accompanied by Captain Elliott, but not at my request. I ordered Lieutenant Stockton to man the boat, but did not specify what men were to go on board. There were some of Captain Elliott's men in the boat. After Lieutenant Stockton returned to the *Lady Davis* and reported, I requested Captain Elliott to pilot the ship into Beaufort, but do not remember the details of the conversation. I had a pilot of my own on board, whom I retained to pilot the *Lady Davis*. Lieutenant Stockton then returned to the ship, taking Captain Elliott and some of his men with him. When Lieutenant Stockton returned, he sent the captain and officers of the *Thompson* and her papers back to the *Lady Davis* by my orders. The prize crew was then sent back to the ship. I detailed that crew (I think there were six), consisting of the men of the *Lady Davis*. Some of the men of Captain Elliott's company accompanied the prize crew; they asked my permission to do so, and I granted it, having no right to detain them. I think they were all armed. I know nothing of what took place on board of the ship after Lieutenant Stockton took charge of her. While we were going into port I ordered Lieutenant Stockton to give me a hawser to tow the ship, which I afterwards countermanded. I ordered Lieutenant Stockton to follow in our wake. I ordered Lieutenant Stockton to cross the bar under topsails. A portion of the way she followed in our wake. Lieutenant Stockton asked permission to bring the ship in without regard to my previous orders, as he had been advised to do so. The *Lady Davis* and prize went in company to the town of Beaufort. The prize crew remained on board the ship until sunset. Lieutenant Stockton came on shore about that time and said that he had left a party of Captain Elliott's men in charge of the ship. I requested Captain Elliott to retain a guard on board the vessel. They have been in charge of the ship until a few days ago. The twenty-three men on board the *Lady Davis* allowed me only six men to send on board the ship as a prize crew. When I invited Captain Elliott to go with me on the 18th, it was with the intention of attacking the *Perry*, an armed vessel of the U. S. Navy. The object of the expedition on the 19th was the same. I never had any conversation with Captain Elliott about a list of the men who accompanied him.

Cross-examined by Mr. MILES:

I took command of the *Lady Davis* on the 10th or 11th of May, by order of Governor Pickens. I then had my commission from the Confederate States. I had orders from Governor Pickens to report to Commodore Tattnall, who was in command of this division. I considered that the *Lady Davis* was then in the Confederate service. The engineer may have been in the Confederate service; none of the others were. The crew was reenlisted into the Confederate service the day after the

[Endorsement.]

Handed to Lieutenant Braine this day, May 31, 1861.

HENRY EAGLE,
Captain.

Instructions of Flag-Officer Stringham, U. S. Navy, commanding Atlantic Blockading Squadron, to Captain Eagle, U. S. Navy, commanding U. S. S. Monticello, regarding blockade duty.

U. S. S. MINNESOTA,
Hampton Roads, May 25, 1861.

SIR: Herewith find enclosed the proclamation of the President of the United States in reference to blockading.

On the arrival of the *Harriet Lane*, which vessel will be sent to relieve you at your present post, you will take in a full supply of coal and proceed off the harbor of Wilmington, N. C. I wish to impress upon you the importance of maintaining a strict blockade, preventing the ingress and egress of all vessels, excepting under the following exceptions:

NAVY DEPARTMENT, *May 4, 1861.*

The Department would in every instance allow at least fifteen days for neutral vessels to depart with or without cargo after the blockade is set with sufficient force.

You will not capture or detain any foreign vessel proceeding toward the entrance of a blockaded port if she shall not previously have received from one of the blockading squadron a special notification of the existence of the blockade, provided she has not contraband goods on board.

This notification must be inserted in writing on the muster roll of the neutral vessel by the cruiser which meets her, and it should contain the announcement, together with statements of the day and the latitude and longitude in which it was made.

You will communicate with me as often as convenient. Wishing you a pleasant cruise,

I am, respectfully, your obedient servant,

S. H. STRINGHAM,
Flag-Officer, Atlantic Blockading Squadron.

Captain HENRY EAGLE,
U. S. Navy.

[Endorsement.]

Handed to Lieutenant Braine this day, May 31, 1861.

HENRY EAGLE,
Captain.

Order of Flag-Officer Stringham, U. S. Navy, commanding Atlantic Blockading Squadron, to Captain Eagle, U. S. Navy, commanding U. S. S. Monticello, regarding the case of the steamer Uncle Ben.

U. S. S. MINNESOTA,
Hampton Roads, May 25, 1861.

SIR: I enclose to you a letter* from the honorable the Secretary of Navy, dated May 23, also copies from Department of State, May 20,

* See p. 662.

Testimony of Robert M. Fuller.

ROBERT M. FULLER, being duly sworn, says:

Examined by Mr. TRESCOT:

I am a member of the Beaufort Volunteer Artillery, now in the service of the Confederate States. In May last I was in the service of the State, and employed in garrison duty in Fort Littleton. I was one of the detachment of the company on board of the *Lady Davis*. The list of the company as read to me is a true list of the company composing such detachment, as far as I can remember. I went on board of the *Lady Davis* on Saturday; we all went on armed and took our own rations with us. We returned that same afternoon, and the next day the steamer returned for us and took us on board. I was not one of those who boarded the *Thompson* for the examination of her papers. I went the second trip of the boat when a transfer of her officers was made. The party on board the boat was composed of sailors who rowed the boat, but did not go on board the ship. Lieutenant Stockton, Captain Elliott, Mr. Fripp, Mr. Chaplin, and myself, and perhaps Midshipman Walker, went on board the ship. Regular posts were assigned to us; we were all stationed by the hatchway, armed with cutlasses and pistols; we were the only armed persons on board. The officers were then transferred to the *Lady Davis*. Midshipman Walker, I believe, went in the boat with the officers and steered the boat. When the boat returned it brought back some three or four of the crew of the *Lady Davis* and a further detachment of our company. The sailors of the *Lady Davis* were armed with cutlasses and pistols; our muskets were brought to us from the *Lady Davis*, and we were regularly stationed in various points about the ship. When we went on board our detachment understood that we were to take part in whatever service might be on hand, and on this account we took our arms along with us. I know nothing of the conversation which took place between Captain Elliott and Lieutenant Pelot. Lieutenant Pelot extended an invitation to the detachment while they were on the steamer on Saturday, to accompany the steamer the next day. We were stationed over the ship at various points by Captain Elliott.

Cross-examined by Mr. MILES:

I am a private in the Beaufort Volunteers. I acted under Captain Elliott's orders. Lieutenant Pelot did give some orders. When we were going to the ship Lieutenant Pelot objected to some one or two, myself particularly, that were going in the boat, thinking, I supposed, that the boat was overloaded. He gave other orders with regard to the part of the *Lady Davis* we were to occupy. The *Thompson* was really under the command of Captain Elliott; Lieutenant Stockton was only his mouthpiece, to issue the orders to the crew, as I understood it. The ship was worked entirely by her own crew, and the detachment of the company and the *Lady Davis's* crew did the same service, viz, keeping guard over the vessel and crew generally. The crew of the ship seemed to work very cheerfully; there was no resistance. The members of our company were all gentlemen of Beaufort.

In reply by Mr. TRESCOT:

When we came in sight of the *Thompson* we were assigned positions on board the *Lady Davis* by Captain Elliott.

R. M. FULLER.

Sworn to before me this 8th July, 1861.

R. C. GILCHRIST,
C. S. Commissioner.

Report of Flag-Officer Pendergrast, U. S. Navy, commanding West India Squadron, regarding vessels placed at the disposal of Major-General Butler, U. S. Army.

U. S. FLAGSHIP CUMBERLAND,
Off Fortress Monroe, Va., May 27, 1861.

SIR: I have the honor to inform the Department that General Butler made his first move this morning by landing 2,500 men at Newport News, on the James River, and I believe they will soon intrench themselves. At the request of General Butler, I placed the steamers *Quaker City*, *Harriet Lane*, and *Monticello* at his disposal for the purpose of conveying troops from Fortress Monroe to Newport News.

I have the honor to be, sir, very respectfully, your obedient servant,

G. J. PENDERGRAST,
Flag-Officer, Commanding Home [West India] Squadron.

Hon. GIDEON WELLES,
Secretary of the Navy, Washington, D. C.

Order of Flag-Officer Pendergrast, U. S. Navy, commanding West India Squadron, to Captain Eagle, U. S. Navy, commanding U. S. S. Monticello, to proceed with that vessel to navy yard, Washington, D. C., for repairs, taking in tow schooners Iris and Catherine.

U. S. FLAGSHIP CUMBERLAND,
Off Fortress Monroe, May 27, 1861.

SIR: Your letter* of this date, in reply to mine of the 26th instant, has been received.

I have concluded to send your vessel to Washington for repairs.

You will tow the schooners *Iris* and *Catherine* to Washington, and on your arrival there hand them over to the commandant of the navy yard, and report yourself to the Department.

You will also convoy the steamer *City of Richmond*, engaged in the Quartermaster's Department, U. S. Army, to Washington.

You will take water casks on board, and while your vessel is being repaired have them filled and bring them to this place.

You will use all possible dispatch in having your vessel repaired, and return to this place for the purpose of carrying out the order of Flag-Officer Stringham.

Very respectfully, your obedient servant,

G. J. PENDERGRAST,
Commanding West India Squadron.

Captain HENRY EAGLE,
Commanding U. S. S. Monticello.

P. S.—On the arrival of the *Monticello* you will please deliver the accompanying papers† relating to the schooners *Iris* and *Catherine* to the U. S. district judge.

G. J. PENDERGRAST.

---

*See p. 676. †See pp. 673, 674.

Report of Flag-Officer Stringham, U. S. Navy, commanding Atlantic Blockading Squadron, regarding transportation to the North of families of refugees.

U. S. S. MINNESOTA,
Hampton Roads, May 21, 1861.

SIR: I have the honor to inform the Department that, in compliance with your instructions of May 11, 1861, containing a copy of petition to the President of the United States from certain persons, former residents of Norfolk and Portsmouth, Va., that I immediately sent Commander A. Ludlow Case with a flag of truce to Norfolk, who had an interview with the military authorities, who promised to forward the objects of the flag. In compliance with which promise, the enclosed advertisement was made, and yesterday a steamer from Norfolk, in charge of the late Commander Thomas T. Hunter, of the Navy, delivered on board the steamer *Keystone State* between 75 and 100 women and children. The steamer would have proceeded immediately to sea, except for a heavy gale then blowing, and which yet continues from the northeast.

She will proceed to New York as soon as the wind subsides. The steamer *Star* [*Monticello*] has again been fired on from the rebel batteries this morning. I think I will send up the *Cumberland* and prevent the completion of this battery.

Respectfully, your obedient servant,

S. H. STRINGHAM,
Senior Flag-Officer Blockading Squadron.

Hon. GIDEON WELLES,
Secretary Navy.

[Enclosure.]

Special notice.

To-day a steamer will leave the railroad wharf, Portsmouth, under a flag of truce, to visit the Federal fleet off Old Point Comfort, for the purpose of taking to that place all women and children who may wish to join their Northern friends.

The boat will start at 12 m., and all desirous of leaving will please report themselves on board before that time.

The families of the following persons have already permission to leave in the steamer: James Hepenstall, L. T. Barnard, J. Lucas, George Richard Boush, John Harbonner, Jos. D. Knapp, Thomas Nelson, Robert Gill, John Butler, W. H. Lewis, James H. Hardwick.

By order of the commander in chief:

THOMAS T. HUNTER,
Commander, Virginia Navy.

Instructions of the Secretary of the Navy to Flag-Officer Stringham, U. S. Navy, commanding Atlantic Blockading Squadron, regarding establishment of an efficient blockade.

NAVY DEPARTMENT, *May 21, 1861.*

SIR: Your dispatches numbered from 1 to 10, inclusive, have been received.

The Department would impress upon you the necessity of a rigid blockade of the port of Charleston, and trusts that no effort will be spared to make it effective.

The *Niagara* was ordered to that duty, but important information as to large shipments of arms to New Orleans and Mobile imposed upon the Department the necessity of changing her destination to the Gulf. To supply her place until further disposition could be made, the Department on the 8th instant ordered that the *Harriet Lane* should perform that service, unless you made other efficient arrangements.

It is rumored that the *Niagara* has left her station off the port of Charleston, and that the blockade is not effective. Trusting that such is not the case, but informing you of the report, the Department would impress upon you the necessity of dispatching, if you have not already done so, a sufficient force to close the harbor of Charleston, and there should be no letting up of the blockade at that, nor indeed at any other point.

It is desirable that Savannah should also be blockaded, and the force at your disposal already is believed to be sufficient for that purpose. As soon as possible an interdiction of all intercourse with the States in insurrection should be instituted and established and every port effectually closed. This is a primary object, and our naval force should not be delayed from its execution or diverted to any other purpose. I take it for granted that the *Minnesota* will not have left Hampton Roads before the receipt of this dispatch, but as early thereafter as in your judgment the circumstances will warrant it is desirable that the force which can be spared from the Chesapeake should be set before the other ports on the coast, and especially before the two important ones indicated.

In a few days the *Wabash* will join your command and perform duty wherever you shall direct. A list of sixteen vessels to constitute a part of the Atlantic Blockading Squadron has already been transmitted to you. Others of our public vessels, as soon as they can be got in readiness, will join you, not only those repairing at the yards, but others returning from foreign stations.

Commodore Pendergrast will for the present remain at his station with the *Cumberland* while you are absent with the *Minnesota*, and will have, in addition to such other vessel or vessels as you may order, Ward's flotilla to carry out his command. The arrival of the *Freeborn* of this flotilla will enable you to send the *Dawn* on more effective service. Under no circumstances should the blockade once established be raised.

To your judgment and discretion the Department confides the duty of establishing the blockade.

Before your arrival on your station special instructions were, from the necessity of the case, given to such vessels as were dispatched to check the insurgents and carry out the purposes of the Government in closing the ports. These commanders had general instructions to capture privateers, vessels having arms, munitions, or articles contraband of war, or which were sailing under any authority or pretended authority not known or recognized by the United States.

Each and all of these vessels from the Chesapeake to Key West, whatever may have been their previous general orders, are subject to your command.

The importance of your movements and the great interests involved to the Government and country will render frequent and detailed reports from you necessary.

I am, respectfully, your obedient servant,

GIDEON WELLES.

Flag-Officer S. H. STRINGHAM,
Comdg. Atlantic Blockading Squadron, Hampton Roads, Virgin

Report of Flag-Officer Stringham, U. S. Navy, commanding Atlantic Blockading Squadron, regarding disposition of vessels of his command.

U. S. S. MINNESOTA.
Hampton Roads, May 23, 1861.

SIR: I have the honor to acknowledge receipt of your letter of May 17, with list of vessels to compose the Atlantic Blockading Squadron.

As soon as the *Wabash* arrives I shall send her off Charleston.

Not being acquainted with the force or character of the other vessels, except as follows, I can not now say the exact disposition I shall make of them.

Brig *Perry* will leave immediately for the coast of Florida.

Harriet Lane [is] very serviceable for the Chesapeake. She can not carry coal except for a few days.

Dawn [is] very good for blockading York River.

Monticello [is] now engaged in blockading James and Elizabeth rivers, under command of Captain Henry Eagle. A most efficient vessel.

Union [has] not arrived; can not speak of her.

Reliance is about the size of a frigate launch. She could not go into the Chesapeake Bay with the wind we have had last day or two.

Resolute, a sister vessel, I am informed, to the *Reliance*.

Daylight, *Mount Vernon*, *Penguin*, and *Albatross* have not arrived. I can not, therefore, speak of them, and can only repeat that nothing shall be wanting on my part with the vessels. The Department has assigned me to keep as strict a blockade as possible on the Atlantic coast.

I am glad to hear the Department has purchased the *Yankee*. She is serviceable here, only requiring to have metal on her to protect from worms.

I again call the attention of the Department to the *Quaker City*. She is a most efficient steamer and is doing excellent service in boarding everything at Cape Henry. I hope she will be retained here, though I think $500 or $600 per diem will be fair allowance.

I also acknowledge receipt of your favor of May 18. I have and shall continue to give full protection to all claiming shelter of the American flag.

I shall exercise my best judgment in reference to disposition of prizes which I may take. This had led me to send the vessels thus far to Philadelphia and New York, which I shall continue, unless otherwise advised, except in case of small vessels, which I may send to Washington, not being willing to trust them to sea.

I shall be most happy to communicate and cooperate with Major-General Butler on his arrival here. Since commencement of the above letter the *Union* has arrived.

Respectfully, your obedient servant,

S. H. STRINGHAM,
Flag-Officer, Atlantic Blockading Squadron.

Hon. GIDEON WELLES,
Secretary of Navy.

Order of the Secretary of the Navy to Flag-Officer Stringham, U. S. Navy, commanding Atlantic Blockading Squadron, transmitting correspondence in the case of captured steamer Uncle Ben.

NAVY DEPARTMENT, *May 23, 1861.*

SIR: Herewith you will receive a copy of a letter of the Secretary of State, dated the 29th instant [ultimo], and also copies of the letters

therein referred to, concerning the seizure and detention of the steamer *Uncle Ben*, at Wilmington, N. C.

You will be pleased to carry out, as far as may be expedient, the recommendation of the Secretary of State in the premises.

I am, respectfully, your obedient servant,

GIDEON WELLES.

Flag-Officer S. H. STRINGHAM,
Hampton Roads, Virginia.

[Enclosure.]

DEPARTMENT OF STATE,
Washington, April 29, 1861.

SIR: I have the honor to submit for your consideration the accompanying letter, addressed by Messrs. Johnson & Higgins, of New York, to the Secretary of War, and by him referred to this Department, and to suggest the propriety of instructing the officer in command of our blockading squadron to use exertions for the relief of the persons referred to in the communication of Messrs. Johnson & Higgins. I enclose a transcript of my reply to the Secretary of War.

I am, sir, your obedient servant,

WILLIAM H. SEWARD.

Hon. GIDEON WELLES,
Secretary of the Navy.

[Subenclosures.]

OFFICE OF JOHNSON & HIGGINS,
AVERAGE ADJUSTERS AND INSURANCE BROKERS,
No. 89 Wall Street, New York, April 25, 1861.

DEAR SIR: Our steam tug, the *Uncle Ben*, was chartered by the Government in connection with the *Yankee*, in which boat we are also interested, through Mr. Russell Sturgis, of this city, to accompany the expedition to reenforce Fort Sumter.

Through the constant succession of adverse gales which prevailed at the time, we now learn that she was compelled to put into Wilmington, N. C., for coal; and by Mr. Whitlock, of the firm of Jones, Neilson & Whitlock, of this city, who has just arrived from that place, we are informed that the vessel was seized there by a mob, and that after temporarily confining them in the cabin, the officers and crew have been since thrown into prison, and from the increasing venom on the part of those people against Northerners, and their knowledge that the boat was employed in the service named, we entertain serious apprehensions of the safety of the lives of the men. We beg that you will take the subject into serious and immediate consideration and devise some plan for their relief.

Very respectfully,

JOHNSON & HIGGINS.

Hon. SIMON CAMERON,
Secretary of War, Washington.

DEPARTMENT OF STATE,
Washington, April 29, 1861.

SIR: I have submitted to the President the letter addressed to you on the 25th instant by Messrs. Johnson & Higgins, and which you referred to this Department.

He feels a deep concern for the brave and patriotic persons to whom it relates, and will submit to the Secretary of the Navy the propriety of instructing the officer having charge of the blockading squadron to intervene in any way he can for their relief.

I am, sir, your obedient servant,

W. H. SEWARD.

Hon. SIMON CAMERON,
Secretary of War.

Report of Flag-Officer Stringham, U. S. Navy, commanding Atlantic Blockading Squadron, regarding disposition of vessels and requirements for an efficient blockade.

U. S. S. MINNESOTA,
Hampton Roads, May 24, 1861.

SIR: I have the honor to acknowledge receipt of your letter of instructions of May 21, 1861.

From the tenor of this dispatch I infer you expected the *Minnesota* was or ought to be at sea. Under this impression I shall sail to-morrow morning for Charleston, leaving directions for those vessels on the list which you furnished me, and which have not yet arrived, to follow in the same direction as soon as they shall report here.

The *Wabash* is a vessel well qualified. The *Albatross*, *Penguin*, *Daylight*, and *Mount Vernon* I have not seen and can not therefore say what qualities they possess for blockading at sea, but I must in all candor say to the Department that the *Thomas Freeborn*, *Reliance*, and *Resolute* are unfit in any respect to go and be employed on the Atlantic coast, and hardly fit for the Chesapeake. I have sent Captain Ward with these three vessels to the Potomac and down the Chesapeake as far as the Rappahannock to prevent any and all communication from Virginia to Maryland.

The *Dawn* being quite a small vessel, I do not think she can be better employed than at York River and thereabouts.

The *Union* has been ordered and is now on her way to Savannah; also the *Perry* is on her way to Florida, off St. Mary's River.

The *Monticello* is well employed in preventing all communication from James River to the Elizabeth, and ready here for other service when needed.

The *Harriet Lane* is off Charleston. The *Cumberland* I leave here. This disposes of all the vessels of which I have any information. A day or two after my arrival the *Pocahontas* came here and informed me she was blockading off the mouth of the Rappahannock. I have learned from Captain Ward, who is direct from Washington, that this last-named steamer is now at Washington, whither she has gone without orders or even my knowledge until now.

With this report the Department will see there is but one vessel for Florida, and none on the coast of North Carolina.

I would respectfully state to the Department that in my judgment to make the blockade of the Atlantic coast perfect and strict, I require at least from twelve to fifteen more efficient and seagoing vessels. Steamers are preferable, or steamers in connection with sailing vessels, frigates, or sloops of war.

I would respectfully state that in my judgment there is required at least from four to five vessels for the coast of Florida, four or five on

the coast of Georgia, four or five on the coast of South Carolina, and the same number on the coast of North Carolina, and the Chesapeake will require at least four or five more. The cruising ground which you have assigned me is very extensive, from 900 to 1,000 miles. I shall, nevertheless, do with the means I now have all that I possibly can to carry into effect the blockade.

In your letter of May 18, you wish me to communicate and cooperate with Major-General B. F. Butler. I have met with him since his arrival and we have communicated together about affairs in this neighborhood. I have just called upon him to say that I leave to-morrow, which he regrets very much, as he wishes the services of the vessels in the movement which he contemplates making.

Respectfully, your obedient servant,

S. H. STRINGHAM,
Flag-Officer, Atlantic Blockading Squadron.

Hon. GIDEON WELLES,
Secretary of Navy.

Letter from Flag-Officer Stringham, U. S. Navy, commanding Atlantic Blockading Squadron, to Commodore Paulding, U. S. Navy, regarding existing conditions of his command.

U. S. S. MINNESOTA,
Hampton Roads, May 24, 1861.

DEAR COMMODORE: I have received your esteemed [favor] of 21st May. In answer, I shall first inform you that I sail to-morrow for Charleston to comply with the general desire which seems to prevail that I should be there, although ordered to the Chesapeake by the Department, as I supposed to arrange and station the blockading squadron. When I left Boston, I did not know a single vessel that would compose the fleet, except the *Minnesota*.

On my arrival here, I found the *Cumberland* and *Harriet Lane*. The *Monticello* was at York River, blockading there. The *Dawn* first arrived. After I put her in proper condition, she appearing from the requests and requisitions made by her commander to be in want of most everything, I ordered her to relieve the *Monticello*, and ordered the *Monticello* to take the station of the *Harriet Lane*, I having received orders to send the latter to Charleston, where she is at present.

Then came the *Perry*, short of officers. I had to detain her a few days for her purser, occupied in the interval with supplying her many wants. She is now on her way to Florida.

Next came the flotilla of Captain Ward. I should like to have you see them, that I might have your opinion of their qualities for blockading; two of them certainly not equaling in safety or capacity a line-of-battle ship's launch, and the *Thomas Freeborn*, the commander's vessel, with guards I observed to-day about 1 foot from the water's edge. I have sent them to-day to guard the Potomac and prevent all intercourse between Virginia and Maryland.

Next comes the *Union*, a long, low steamer, and quite a nice looking vessel, rather in distress from defective magazine. I hurried her off to Savannah, and after I leave in the morning, I leave behind the *Cumberland* and the *Monticello* to do duty at this point. When I shall see the other vessels mentioned I can not now say, but will give you my

opinion that, with the addition of twelve or fifteen more good vessels, of these three or four frigates, for offshore cruising, and steamers inshore, I might make a strict blockade.

As you will no doubt remember, the coast from Key West to the Chesapeake is from 900 to 1,000 miles.

If you can have the vessels sent me I shall be much gratified. At the same time I will suggest that the better arrangement for the commander of such a squadron would be at some point where the vessels can communicate to him and receive instructions for cruising, etc., from time to time, until he gets them fairly located according to their adaptation for the services required of them, when he could cruise himself with more propriety and keep a general supervision of the blockade.

Very respectfully, your obedient servant,

S. H. STRINGHAM,
Flag-Officer, Atlantic Blockading Squadron.

Commodore H. PAULDING.

Order of the Secretary of the Navy to Lieutenant Sartori, U. S. Navy commanding U. S. S. Flag, to proceed to duty in Atlantic Blockading Squadron.

NAVY DEPARTMENT, *May 21, 1861.*

SIR: In consequence of the steamer *Flag* not being coppered, she will form a part of the Atlantic Blockading Squadron.

Therefore, instead of proceeding with her to the Gulf, as instructed on the 17th instant, you will stop at Hampton Roads. Not finding instructions there from Flag-Officer Stringham for your guidance, you will continue your course to Charleston, and remain off that port until otherwise directed by the Department or the flag-officer of the Atlantic Blockading Squadron.

I am, respectfully, your obedient servant,

GIDEON WELLES.

Lieutenant L. C. SARTORI,
Commanding U. S. S. Flag, Philadelphia.

Letter from the Secretary of the Navy to Flag-Officer Stringham, U. S. Navy, commanding Atlantic Blockading Squadron, regarding U. S. S. Flag.

NAVY DEPARTMENT, *May 21, 1861.*

SIR: The steamer *Flag*, now at Philadelphia, will form a part of the Atlantic Blockading Squadron. Her commanding officer, Lieutenant L. C. Sartori, has been directed to proceed with her to Hampton Roads, and in the event of not finding instructions there from you, to continue to Charleston, S. C., and remain off that port until otherwise ordered by the Department or the flag-officer of the Atlantic Blockading Squadron.

I am, respectfully, your obedient servant,

GIDEON WELLES.

Flag-Officer S. H. STRINGHAM,
Comdg. Atlantic Blockading Squadron, Hampton Roads, Virginia.

Letter from Flag-Officer Pendergrast, U. S. Navy, commanding West India Squadron, to Brigadier-General Huger, C. S. Army, commanding at Norfolk, Va.

U. S. FLAGSHIP CUMBERLAND,
Off Fortress Monroe, May 28, 1861.

SIR: Your communication* of this date has been received. You will accept my thanks for the prompt manner in which you have complied with my request.

Very respectfully, your obedient servant,

G. J. PENDERGRAST,
Flag-Officer, Commanding West India Squadron.

Brigadier-General HUGER,
Commanding Forces, Norfolk Harbor.

Letter from Flag-Officer Pendergrast, U. S. Navy, commanding West India Squadron, to the mayor of Norfolk, Va.

U. S. FLAGSHIP CUMBERLAND,
Off Fortress Monroe, Va., May 28, 1861.

SIR: Your communication*, under date of the 27th instant, has been received. I beg to inform you in reply that I have no jurisdiction [as] to the ransom, it being under the control of Major-General Butler.

Very respectfully,

G. J. PENDERGRAST,
Flag-Officer, Commanding West India Squadron.

W. W. LAMB,
Mayor of Norfolk.

Letter from Flag-Officer Pendergrast, U. S. Navy, commanding West India Squadron, to Major-General Butler, U. S. Army, commanding Fortress Monroe, regarding refugees.

U. S. FLAGSHIP CUMBERLAND,
Off Fortress Monroe, May 28, 1861.

SIR: By the flag of truce this day I received about seventy-five men, women, and children desirous of returning to the North. They are now on board this ship, and I would be glad if you will give me authority to send them by the first public transport leaving here for the North.

Very respectfully, your obedient servant,

G. J. PENDERGRAST,
Flag-Officer, Commanding West India Squadron.

Major-General BUTLER,
Commanding Fortress Monroe.

---

* Not found.

UNITED STATES STEAMER QUAKER CITY.

Order of the Secretary of the Navy to Commander Green, U. S. Navy, commanding U. S. ship Jamestown, to proceed to duty in the Atlantic Blockading Squadron.

NAVY DEPARTMENT, *May 29, 1861.*

SIR: The U. S. sloop of war *Jamestown*, under your command, is to form a part of the Atlantic Blockading Squadron.

As soon, therefore, as she is prepared for sea, you will proceed with her immediately to Hampton Roads and report to Flag-Officer Stringham, or the senior commanding officer present, for duty.

Before sailing from Philadelphia you will transmit to the Department a muster roll of the *Jamestown* and separate list of her officers.

I am, respectfully, your obedient servant,

GIDEON WELLES.

Commander CHAS. GREEN,
Commanding U. S. ship Jamestown, Philadelphia.

Report of Flag-Officer Pendergrast, U. S. Navy, commanding West India Squadron, regarding fresh-water supply.

U. S. FLAGSHIP CUMBERLAND,
Off Fortress Monroe, Va., May 29, 1861.

SIR: I have the honor to acknowledge the receipt of your letter under date of the 28th instant in relation to water.

I was glad to hear that the Department had made arrangements for supplying the squadron with fresh water, as I have learned since my last letter to you on that subject that the wells at Fortress Monroe are inadequate to supply the squadron, it being all needed for the use of the fortress.

I have not as yet received a copy of the agreement from the navy agent at Baltimore.

I have the honor to be, sir, very respectfully, your obedient servant,

G. J. PENDERGRAST,
Flag-Officer, Commanding West India Squadron.

Hon. GIDEON WELLES,
Secretary of the Navy, Washington, D. C.

Letter from Flag-Officer Pendergrast, U. S. Navy, commanding West India Squadron, to Acting Master Mather, commanding chartered steamer Quaker City, regarding distribution of letters to expected vessels.

U. S. FLAGSHIP CUMBERLAND,
Off Fortress Monroe, Va., May 29, 1861.

SIR: Enclosed you will find a lot of open letters for vessels expected to arrive at the capes of the Chesapeake. You will board all such vessels and deliver the letters to them.

If the vessels and cargoes are owned by the rebels or destined for a blockade port, you will capture them and not deliver their letters.

Very respectfully,

G. J. PENDERGRAST,
Flag-Officer, Commanding West India Squadron.

Captain MATHER,
Commanding Quaker City.

P. S.—Any vessel you may warn off, you will allow the pilot to deliver letters relating to her.

Report of Flag-Officer Stringham, U. S. Navy, commanding Atlantic Blockading Squadron, regarding vessels required for an efficient blockade.

U. S. S. MINNESOTA,
Off Charleston Harbor, May 30, 1861.

SIR: I have the honor to inform the Department that I arrived off this harbor the evening of May 28, and the experience of a day confirms the propriety and correctness of my suggestions heretofore made to the Department as to the number and class of vessels requisite to establish and carry out a strict blockade of the Atlantic coast—not less than five or six for the coast of each State, and they fast and of sufficient capacity to carry coal for some time, like the *Pensacola*, *Hartford*, *Iroquois*, and that class, or the *Atlantic* and *Baltic*, with two heavy guns, not less than 10-inch.

Such as the *Dawn* and her class are of little use for Atlantic blockading.

Yesterday, 29th, while we lay close in near the bar, a steamer came down toward us from Charleston under great head of steam. I stood off a little in hopes she would follow us into deep water. I intended to try and cut her off, but she only came a little way outside of the bar and then returned. She was very fast, going 2 miles to our 1; others were visible up in the harbor.

I was in hopes of finding the *Harriet Lane* off here, but did not, she no doubt having returned to Hampton Roads for coal.

This morning I discovered a steamer, which proved to be the *Union*. She is out of coal. I shall send her to Hampton Roads for supply, with orders to return immediately.

I trust the Department will give me vessels of the class I have mentioned above, and sufficient in numbers to make an efficient blockade. I can not make it strict with less than 20 or 25 vessels on the Atlantic, besides those small ones which are only fit for the Chesapeake.

I boarded last night a small schooner from North Carolina, bound to Florida. I ordered her to return to North Carolina.

With the number of vessels I have stated above, most no doubt being steamers, they would keep a strict coast guard in passing and repassing for their coal at Hampton Roads from their various stations.

I shall remain off here as long as my coal will permit and then return to Hampton Roads for supply.

Respectfully, your obedient servant,

S. H. STRINGHAM,
Flag-Officer, Atlantic Blockading Squadron.

Hon. GIDEON WELLES,
Secretary Navy.

Letter from Flag-Officer Stringham, U. S. Navy, commanding Atlantic Blockading Squadron, to Commodore Paulding, U. S. Navy, regarding vessels required for an efficient blockade.

U. S. S. MINNESOTA,
Off Charleston Harbor, May 30, 1861.

DEAR SIR: I am still more firmly convinced that I want the number and class of vessels which I mentioned to you in my communication on this subject from Hampton Roads to make a strict blockade of the Atlantic coast.

Those vessels stationed off North Carolina, South Carolina, and Georgia will be obliged to go to Hampton Roads for coal and water; those on the coast of Florida, to Key West. This will keep one or two coming and going constantly, which will serve as a coast guard.

The only ones I know at present engaged in blockading are the brig *Perry* on the coast of Florida and my ship here. As a steamer can do nothing without coal, when it is nearly out she has to go to the depot for a supply, where the *Lane* now is, and the *Union* follows. These are too small and carry too little coal for Atlantic blockading. As I have mentioned to the Department, the *Pensacola*, *Hartford*, *Iroquois*, *Atlantic*, and *Baltic* are the kind we want to make it effective on the Atlantic.

Respectfully, your obedient servant,

S. H. STRINGHAM,
Flag-Officer, Atlantic Blockading Squadron.

Commodore H. PAULDING, U. S. Navy.

Letter from Flag-Officer Pendergrast, U. S. Nary, commanding West India Squadron, to the judge of the U. S. district court, New York, regarding captured schooner Lynchburg.

U. S. FLAGSHIP CUMBERLAND,
Off Fortress Monroe, Va., May 30, 1861.

SIR: I herewith enclose to you the papers relating to the schooner *Lynchburg*, of Richmond, Va., from Rio de Janeiro bound to Richmond, Captain W. C. Harris; cargo, coffee. The said schooner was seized at the capes of Virginia by Acting Master S. W. Mather, of the U. S. S. *Quaker City*, for attempting to enter a blockaded port.

The said seizure was made by my authority and under instructions from me.

The schooner will be sent to New York in charge of Acting Master James B. Gordon, U. S. Navy.

Thomas M. Farrell, third mate of the *Quaker City*, who was present at the capture, will go to New York in the schooner.

Very respectfully, your obedient servant,

G. J. PENDERGRAST,
Flag-Officer, Commanding West India Squadron.

U. S. DISTRICT JUDGE,
New York.

Request of Flag-Officer Pendergrast, U. S. Navy, commanding West India Squadron, for the services of a pilot in Chesapeake Bay.

U. S. FLAGSHIP CUMBERLAND,
Off Fortress Monroe, Va., May 30, 1861.

SIR: I respectfully request that the Department will send or authorize me to employ a pilot for Hampton Roads and the Chesapeake Bay.

Such a person is often called for on board of the flagship, and it is very necessary that we should have one.

I have the honor to be, sir, very respectfully, your obedient servant,

G. J. PENDERGRAST,
Flag-Officer, Commanding West India Squadron.

Hon. GIDEON WELLES,
Secretary of the Navy, Washington, D. C.

In consequence of master's mates being ordered away with prizes, it would be very desirable that a few midshipmen be ordered here.

I have the honor to be, sir, very respectfully, your obedient servant,

G. J. PENDERGRAST,
Commanding West India Squadron.

Hon. GIDEON WELLES,
Secretary of the Navy.

Order of Flag-Officer Pendergrast, U. S. Navy, commanding West India Squadron, to Acting Master's Mate Woodstock, U. S. Navy, to take to Washington, D. C., as prizes, schooners General Knox and Georgeanna.

U. S. FLAGSHIP CUMBERLAND,
Off Fortress Monroe, Va., May 25, 1861.

SIR: You will proceed with the steam tug *Yankee* and take the schooners *General Knox* and *Georgeanna* to Washington as prizes.

On your arrival there, you will deliver the accompanying papers to the U. S. district judge and report yourself to the Navy Department. After performing these duties, you will return to your ship and station.

Respectfully, G. J. PENDERGRAST,
Flag-Officer, Commanding West India Squadron.

HENRY WOODSTOCK,
Master's Mate of the Dawn.

[Enclosure.]

U. S. FLAGSHIP CUMBERLAND,
Off Fortress Monroe, Va., May 22, 1861.

SIR: I herewith enclose to you the papers relating to the schooner *General Knox*, of Thomaston, Me., Captain J. W. Small, bound to St. John, New Brunswick, cargo oak timber, also the schooner *Georgeanna*, of St. George, Me., bound to Quincy, Mass., cargo oak timber.

They were captured in York River this day by Commander Chandler, of the U. S. S. *Dawn*, for violating the blockade. This letter, with its enclosures, will be handed you by Henry Woodstock, master's mate of the steamer *Dawn*.

Very respectfully, your obedient servant,

G. J. PENDERGRAST,
Flag Officer, Commanding West India Squadron.

U. S. DISTRICT JUDGE,
Washington, D. C.

Letter from Flag-Officer Stringham, U. S. Navy, commanding Atlantic Blockading Squadron, to Captain Eagle, U. S. Navy, commanding U. S. S. Monticello, regarding the name of that vessel.

U. S. S. MINNESOTA,
Hampton Roads, May 25, 1861.

SIR: From an official list sent me by the Navy Department, dated May 17, 1861, I am informed that your vessel, which you now command, is called the *Monticello*.

Respectfully, your obedient servant,

S. H. STRINGHAM,
Flag-Officer, Atlantic Blockading Squadron.

Captain HENRY EAGLE,
U. S. S. Monticello.

magazine, am now on my way to sea, in obedience to your order of the 24th instant, having in tow the sloop *Iowa*, with 500 barrels of gunpowder for Fortress Monroe, from the mouth of the Christiana Creek.

I herewith enclose the muster roll of officers and ship's company. The ship appears to carry her battery well, and is in good working condition.

I have the honor to remain, very respectfully, your obedient servant,

L. C. SARTORI,
Lieutenant, Commanding.

Hon. G. WELLES,
Secretary of the Navy, Washington, D. C.

DELAWARE BREAKWATER, *9 o'clock, p. m.*

In consequence of a strong southwardly wind and heavy sea, for the safety of the tow I have been compelled to run in and anchor at this place, and shall proceed at the earliest moment.

Respectfully, etc.,

L. C. SARTORI.

Order of the Secretary of the Navy to Commander Lockwood, U. S. Navy, commanding U. S. S. Daylight, to proceed to duty in the Atlantic Blockading Squadron.

NAVY DEPARTMENT, *June 1, 1861.*

SIR: The steamer *Daylight*, under your command, is to form a part of the Atlantic Blockading Squadron. As soon, therefore, as she is prepared for sea, you will proceed with her immediately to Hampton Roads and report to Flag-Officer Stringham, or the senior commanding officer present, for duty.

Transmit to the Department before sailing a complete muster roll of the *Daylight* and a separate list of the officers.

I am, respectfully, your obedient servant,

GIDEON WELLES.

Commander SAMUEL LOCKWOOD,
Commanding U. S. S. Daylight, New York.

Letter from Flag-Officer Pendergrast, U. S. Navy, commanding West India Squadron, to Flag-Officer Stringham, U. S. Navy, commanding Atlantic Blockading Squadron, regarding U. S. S. Wabash.

U. S. FLAGSHIP CUMBERLAND,
Off Fortress Monroe, Va., June 1, 1861.

SIR: I have the honor to inform you that the U. S. steam frigate *Wabash*, Captain Samuel Mercer, arrived here this morning, and will leave this afternoon in obedience to your order.

I have sent in the *Wabash* four acting masters, with orders to report to you, and have retained three here.

Very respectfully, sir, your obedient servant,

G. J. PENDERGRAST,
Flag-Officer, Commanding West India Squadron.

Flag-Officer SILAS H. STRINGHAM,
Commanding U. S. Blockading Squadron.

one from office of Johnson & Higgins, average adjusters, etc., New York, April 26, and one from executive department, State of New York, April 30, 1861, in reference to steamer *Uncle Ben*, lately seized at Wilmington, N. C.

On your arrival off that port you will do what you can to comply with the request of the honorable the Secretary of Navy in this matter.

You will please preserve and return the enclosed papers to me.

Respectfully, your obedient servant,

S. H. STRINGHAM,
Flag-Officer, Atlantic Blockading Squadron.

Captain HENRY EAGLE,
U. S. S. Monticello.

[Endorsement.]

Handed to Lieutenant Braine this day, May 30, 1861.

HENRY EAGLE,
Captain.

Order of Flag-Officer Pendergrast, U. S. Navy, commanding West India Squadron, to Captain Eagle, U. S. Navy, commanding U. S. S. Monticello, to state cause of noncompliance with orders.

U. S. FLAGSHIP CUMBERLAND,
Off Fortress Monroe, Va., May 26, 1861.

SIR: You will please inform me as to the wants and deficiencies of your vessel, and why it is necessary for your vessel to proceed to Washington.

Also please inform me what prevents your vessel from carrying out Flag-Officer Stringham's instructions to proceed to the coast of North Carolina

Very respectfully, your obedient servant,

G. J. PENDERGRAST,
Flag-Officer, Commanding West India Squadron.

Captain HENRY EAGLE,
Commanding U. S. S. Monticello.

Order of Flag-Officer Pendergrast, U. S. Navy, commanding West India Squadron, to Lieutenant Todd, U. S. Navy, to proceed as bearer of letters to Major-General Gwynn, commanding at Norfolk, Va.

U. S. SHIP CUMBERLAND,
Off Fortress Monroe, Va., May 26, 1861.

SIR: You will proceed in the steam tug *Young America*, under flag of truce, as far as Craney Island, and there take the small boat to Norfolk.

On your arrival at Norfolk you will deliver the accompanying letters to General Gwynn.

You will stop when required by the authorities on the way. You will keep the white flag flying all the time.

After having performed that duty you will return to the flagship.

Very respectfully,

G. J. PENDERGRAST,
Flag-Officer, Commanding West India Squadron.

Lieutenant HENRY D. TODD,
U. S. Ship Cumberland.

upon. A number of these vessels are accessible on the Cheasapeake and Delaware, and Delaware and Raritan Canal Company. The undersigned confidently asserts that there is no part of the country in armed rebellion against the Government which can be so easily and so terribly made to feel the power of the United States by its occupation by the Federal forces as the inland coast of North Carolina. So long as the canal is open and in the hands of the rebels Norfolk and Richmond, in Virginia, Wilmington, New Berne, Beaufort, and many thriving towns in North Carolina, have a ready access to the sea or an easy and safe communication with each other.

The undersigned's knowledge of this matter arises from a large pecuniary interest which he and his family hold in shares, the work having been entirely done by Northern men and capital. Any information desired by the Department will be cheerfully given.

Very respectfully, etc.,

R. B. LOWRY,
Lieutenant, U. S. Navy.

Hon. GIDEON WELLES,
Secretary of the Navy, Washington, D. C.

Letter from the Secretary of the Navy to Lieutenant Lowry, U. S. Navy, U. S. S. Pawnee, regarding inland navigation of Albemarle Sound.

NAVY DEPARTMET, *June 27, 1861.*

SIR: I have received your letter of the 20th instant. Your communication with accompanying chart of the inland navigation of Albemarle Sound was handed to me and cursorily read at the time. It has been mislaid and has not yet come to light. Renewed search will be made for it, and if found your suggestions shall receive due consideration.

I am, respectfully, your obedient servant,

GIDEON WELLES.

Lieutenant R. B. LOWRY,
U. S. S. Pawnee, Potomac River.

Letter from the Secretary of the Navy to Lieutenant-Commander Lowry, U. S. Navy, acknowledging with thanks the valuable information furnished the Department regarding the inner waters of North Carolina.

NAVY DEPARTMENT, *March 21, 1864.*

SIR: I omitted making acknowledgments to you in the summer o. 1861 for valuable information which you communicated in June of that year, relative to the navigation of the inner waters of North Carolina, then much used by the rebels in depredating upon our commerce. The maps and reports relative to Albemarle Sound, the Hatteras Inlet, and the Chesapeake and Albemarle Canal, all at that time in possession of the rebels, were valuable. You were detached from the command of the *Freeborn* soon after these communications were made and placed upon special service, having for its objects the obstruction of those inlets which were the resort of rebel pirates, and charged with the duty of selecting and organizing a body of pilots. In command

Letter from Flag-Officer Pendergrast, U. S. Navy, commanding West India Squadron, to the judge of the U. S. district court, Washington, D. C., regarding captured schooner Catherine.

U. S. FLAGSHIP CUMBERLAND,
Off Fortress Monroe, May 26, 1861.

SIR: I herewith enclose to you the papers relating to the schooner *Catherine*, Captain J. W. Latchem, of New Berne, N. C., bound to Baltimore; cargo, naval stores.

The said schooner was captured by the U. S. S. *Harriet Lane*. This letter, with its enclosures, will be handed you by an officer of the *Harriet Lane*.

Very respectfully,

G. J. PENDERGRAST,
Flag-Officer, Commanding West India Squadron.

U. S. DISTRICT JUDGE,
Washington, D. C.

Letter from Flag-Officer Pendergrast, U. S. Navy, commanding West India Squadron, to Major-General Butler, U. S. Army, commanding Fortress Monroe, regarding cooperation.

U. S. FLAGSHIP CUMBERLAND,
Off Fortress Monroe, Va., May 26, 1861.

SIR: Your communication* of this date has been received.

The *Yankee* has left for Washington, but the *Quaker City*, *Harriet Lane*, and *Monticello* are at your disposal to-morrow morning at 6 o'clock.

Very respectfully, your obedient servant,

G. J. PENDERGRAST,
Flag-Officer, Commanding West India Squadron.

Major-General BUTLER,
Commanding Fortress Monroe.

Order of Flag-Officer Pendergrast, U. S. Navy, commanding West India Squadron, to Captain Eagle, U. S. Navy, commanding U. S. S. Monticello, to cooperate with Major-General Butler, U. S. Army.

U. S. SHIP CUMBERLAND,
Off Fortress Monroe, May 27, 1861.

SIR: General Butler having requested that the steamers *Quaker City*, *Harriet Lane*, and *Monticello* be placed at his disposal, I have granted his request.

You will therefore be governed by any orders you may receive from him, and on your return report yourself to the flagship.

I have sent Lieutenant Selfridge on board the *Quaker City* with an armed boat, and have directed him to report himself to the General. Lieutenant Selfridge goes for the double purpose of commanding that boat and drilling the crew of the *Quaker City* at small arms.

Very respectfully,

G. J. PENDERGRAST,
Flag-Officer, Commanding West India Squadron.

Captain HENRY EAGLE,
Commanding Monticello.

---

*Not found.

Report of Flag-Officer Pendergrast, U. S. Navy, commanding West India Squadron, regarding the blockading force off Fortress Monroe.

U. S. FLAGSHIP CUMBERLAND,
Off Fortress Monroe, Va., June 2, 1861.

SIR: I would respectfully inform the Department that it will be necessary for me to send the U. S. S. *Quaker City* to New York for repairs and that she may receive a proper crew under her new charter. She will not be absent longer than four or five days. I would also state that the blockading force here is small at present, being composed entirely of this ship, *Harriet Lane*, *Quaker City*, and the U. S. S. *Dawn*, now at the mouth of York River. The captured steam tug *Young America*, which has been very serviceable to us here, has at last broken down and it is absolutely necessary that she should go to some place for repairs, and I would feel obliged if the Department would order another small tug in her place, to act as a tender to this ship.

I have the honor to be, very respectfully, your obedient servant,

G. J. PENDERGRAST,
Flag-Officer, Commanding West India Squadron.

Hon. GIDEON WELLES,
Secretary of the Navy.

Report of Flag-Officer Pendergrast, U. S. Navy, commanding West India Squadron, urging the need of a paymaster.

U. S. FLAGSHIP CUMBERLAND,
Off Fortress Monroe, Va., June 2, 1861.

SIR: At the risk of being importunate, I must again inform the Department that no paymaster has as yet arrived.

It is absolutely necessary that we should have one. The crew are actually suffering for the want of paymaster's supplies.

I have the honor to be, very respectfully, your obedient servant,

G. J. PENDERGRAST,
Flag-Officer, Commanding West India Squadron.

Hon. GIDEON WELLES,
Secretary of the Navy, Washington, D. C.

Report of Flag-Officer Stringham, U. S. Navy, commanding Atlantic Blockading Squadron, regarding the movements of the flagship, and the capture, June 3, 1861, by U. S. brig Perry, of the Confederate privateer schooner Savannah.

U. S. S. MINNESOTA,
Off Charleston Harbor, June 6, 1861.

SIR: Since my arrival on this station, of which I apprised you, I have been engaged in carrying into effect the blockade.

The first vessel spoken was May 29, a small schooner, the *Mary*, from Washington, N. C., bound to Jacksonville, Fla. I ordered her back to North Carolina.

The Norwegian consul came out on the 30th of May, to endeavor to get permission for the Norwegian bark *Admiral Peter Tordenskjold* to

Report of Flag-Officer Pendergrast, U. S. Navy, commanding West India Squadron, regarding the change of orders of the U. S. S. Monticello.

U. S. FLAGSHIP CUMBERLAND,
Off Fortress Monroe, May 27, 1861.

SIR: I have the honor herewith to enclose to the Department the reports of Captain Eagle and the chief engineer of the U. S. S. *Monticello*, from which you will learn why I sent her to Washington instead of the coast of North Carolina, as directed by Flag-Officer Stringham.

I have the honor to be, sir, very respectfully, your obedient servant,

G. J. PENDERGRAST,
Flag-Officer, Commanding West India Squadron.

Hon. GIDEON WELLES,
Secretary of the Navy, Washington, D. C.

[Enclosure.]

U. S. S. MONTICELLO (LATE STAR),
Hampton Roads, May 27, 1861.

SIR: I am in receipt of your letter of yesterday's date.

Herewith I enclose the report of the engineer of this ship in which you will perceive the necessity of this vessel going to a workshop to have the repairs made. Should she continue steaming a few days more she will require more extensive repairs, in addition to repairs mentioned in said letter. She has cracked the starting bar and broken the turnover center bar. The vessel's bottom is not coppered; she should go into fresh water to destroy the worms. The pivot-gun carriage requires considerable repairs. It was used on board the frigate *Mississippi* many years ago.

This vessel was sent off from the navy yard requiring many articles in consequence of the great desire to send her on service.

I respectfully state that I consider that it would not be safe to send this ship to sea without first completing the repairs required.

I am, respectfully, your obedient servant,

HENRY EAGLE,
Captain, Commanding U. S. S. Monticello.

Flag-Officer G. J. PENDERGRAST,
Commanding West India Squadron.

[Subenclosure.]

U. S. S. STAR (LATE MONTICELLO*),
Hampton Roads, May 25, 1861.

SIR: I hereby wish to report to you several defects in our engine and boiler.

Worthington pump receiving pipe for the delivery leaking badly (wrought-iron pipe); piston has to be taken out to fix bolt in bottom of cylinder. Throttle valve to be ground in. Want a valve on the steam chest to take the pressure off the main steam valves. Boiler leaking badly, wanting patches and socket bolts. Force pump feed pipe burst.

I am, sir, your obedient servant,

G. M. WENT,
Chief Engineer.

Flag-Officer STRINGHAM.

---

*See p. 670.

Order of the Secretary of the Navy to Flag-Officer Stringham, U. S. Navy, commanding Atlantic Blockading Squadron, regarding steamer Quaker City.

NAVY DEPARTMENT, *May 27, 1861.*

SIR: The steamer *Quaker City* has been rechartered for three months from the 25th instant, and will form a part of the Atlantic Blockading Squadron.

I am, respectfully, your obedient servant,

GIDEON WELLES.

Flag-Officer S. H. STRINGHAM,
Comdg. Atlantic Blockading Squadron, Hampton Roads, Virginia.

Request of Flag-Officer Pendergrast, U. S. Navy, commanding West India Squadron, to Captain Kelly, commanding steamer City of Richmond, to assist in towing.

U. S. SHIP CUMBERLAND,
Off Fortress Monroe, May 27, 1861.

SIR: I have directed Captain Eagle, of the U. S. S. *Monticello*, to convoy the *City of Richmond* to Washington. The *Monticello* will have to tow two schooners to Washington, and I would be pleased if you would relieve her of one of them. Captain Eagle will be ready to-morrow morning about 10 o'clock.

Very respectfully,

G. J. PENDERGRAST,
Flag-Officer, Commanding West India Squadron.

Captain J. R. KELLY,
Steamer City of Richmond.

Instructions of the Secretary of the Navy to Flag-Officer Stringham, U. S. Navy, commanding Atlantic Blockading Squadron, regarding matters pertaining to his command.

NAVY DEPARTMENT, *May 28, 1861.*

SIR: From the tenor of your letter of the 24th instant I suppose that you are at this time off Charleston with the *Minnesota*. The importance of a rigid and effectual blockade of that port is a necessity, and it was the desire of the Department that the blockading squadron should keep this in view which prompted the remarks on the 21st instant. As soon as the *Wabash* arrives out she can relieve you of that duty and enable you to return with the *Minnesota* to Hampton Roads, where you can probably best exercise your command and direct the movements of the squadron.

It is essential that the intercourse between Virginia and Maryland and the opposite shore of Virginia, which is represented as carried on to some extent, should be prohibited, and for this duty, as well as closing the inlets, it is believed that the flotilla under Commander Ward will be found serviceable.

The number of vessels sent you is not so large as the Department would wish nor of the description that would be preferred, but we have to conform to existing circumstances. We shall add to the number as rapidly as circumstances will admit, and if you can not line the whole coast with vessels you will use such as you have to the best advantage by closing the most important points to the extent of your ability.

Had the Department received your dispatch suggesting that the *Cumberland* should be assigned to the blockading duty off Charleston, it would have assented most cheerfully to the proposition, for the object was and is a strict blockade of that harbor. The late arrival of the *Minnesota* on the blockading ground rendered it necessary that the Department should assign such of the vessels to duty which were there in advance of her. It will be happy to be relieved of this necessity and to commit the entire charge of the squadron to you, unless otherwise specifically ordered.

The *Pawnee*, *Pocahontas*, and some small steamers on the upper waters of the Potomac will be more immediately under the supervision of the commandant of the Washington navy yard and this Department.

I am, respectfully, your obedient servant,

GIDEON WELLES.

Flag-Officer S. H. STRINGHAM,
Commanding Atlantic Blockading Squadron, off Charleston.

Instructions of the Secretary of the Navy to Flag-Officer Pendergrast, U. S. Navy, commanding West India Squadron, designating additional vessels for his command.

NAVY DEPARTMENT, *May 28, 1861.*

SIR: Your dispatch of the 18th instant was received. The *Vandalia*, Commander S. P. Lee, has been ordered to proceed to Hampton Roads and report to you for instructions as a part of the West India Squadron. You will, if possible, dispatch her to her destination before she comes to anchor.

The *Bainbridge*, Lieutenant Commanding T. M. Brasher, sailed from Boston a few days since for Aspinwall. She is also to be attached to your squadron. Until otherwise ordered by the Department or yourself, she is to remain at Aspinwall for the protection of the California mail steamers. Paymaster Harwood has been ordered to the *Cumberland.*

The Department can not order a captain of the fleet, as requested, as there are no officers to keep up the complements except by making acting appointments from the merchant service. When the *Roanoke* arrives you will transfer your flag to that vessel, and the *Cumberland*, under Captain Marston, will form a part of Flag-Officer Stringham's squadron. She will, however, proceed to New York before entering upon that service.

I am, respectfully, your obedient servant,

GIDEON WELLES.

Flag-Officer G. J. PENDERGRAST,
Commanding West India Squadron, Hampton Roads, Virginia.

Letter from Flag-Officer Pendergrast, U. S. Navy, commanding West India Squadron, to Brigadier-General Huger, C. S. Army, commanding at Norfolk, Va.

U. S. FLAGSHIP CUMBERLAND,
Off Fortress Monroe, May 28, 1861.

SIR: Your communication* of this date has been received. You will accept my thanks for the prompt manner in which you have complied with my request.

Very respectfully, your obedient servant,

G. J. PENDERGRAST,
Flag-Officer, Commanding West India Squadron.

Brigadier-General HUGER,
Commanding Forces, Norfolk Harbor.

Letter from Flag-Officer Pendergrast, U. S. Navy, commanding West India Squadron, to the mayor of Norfolk, Va.

U. S. FLAGSHIP CUMBERLAND,
Off Fortress Monroe, Va., May 28, 1861.

SIR: Your communication*, under date of the 27th instant, has been received. I beg to inform you in reply that I have no jurisdiction [as] to the ransom, it being under the control of Major-General Butler.

Very respectfully,

G. J. PENDERGRAST,
Flag-Officer, Commanding West India Squadron.

W. W. LAMB,
Mayor of Norfolk.

Letter from Flag-Officer Pendergrast, U. S. Navy, commanding West India Squadron, to Major-General Butler, U. S. Army, commanding Fortress Monroe, regarding refugees.

U. S. FLAGSHIP CUMBERLAND,
Off Fortress Monroe, May 28, 1861.

SIR: By the flag of truce this day I received about seventy-five men, women, and children desirous of returning to the North. They are now on board this ship, and I would be glad if you will give me authority to send them by the first public transport leaving here for the North.

Very respectfully, your obedient servant,

G. J. PENDERGRAST,
Flag-Officer, Commanding West India Squadron.

Major-General BUTLER,
Commanding Fortress Monroe.

---

* Not found.

Order of the Secretary of the Navy to the senior officer commanding off Hampton Roads, Virginia, regarding supplies of water.

NAVY DEPARTMENT, *May 28, 1861.*

SIR: An arrangement has been made with Mr. Clayton, of Baltimore, for supplying the squadron on the Chesapeake with fresh water, to be delivered alongside the vessels.

A copy of the agreement will be transmitted to you by the navy agent at Baltimore.

I am, respectfully, your obedient servant,

GIDEON WELLES.

SENIOR COMMANDING OFFICER OF THE U. S. NAVY,
Hampton Roads, Virginia.

Report of Flag-Officer Pendergrast, U. S. Navy, commanding West India Squadron, regarding orders given to U. S. S. Vandalia.

U. S. FLAGSHIP CUMBERLAND,
Off Fortress Monroe, Va., May 29, 1861.

SIR: I have the honor to acknowledge the receipt of your letter under date of the 28th instant. Not having received any instructions from the Department in relation to my squadron in the West Indies, I felt at a loss as to what instructions I am to give the *Vandalia* on her arrival here, other than to send her to Vera Cruz or Aspinwall. I was pleased to hear that the Department has ordered a paymaster to this ship, as we have been greatly embarrassed for more than a month.

I have the honor to be, sir, very respectfully, your obedient servant,

G. J. PENDERGRAST,
Flag-Officer, Commanding West India Squadron.

Hon. GIDEON WELLES,
Secretary of the Navy, Washington, D. C.

Report of Captain Eagle, U. S. Navy, commanding U. S. S. Monticello, of the arrival of that vessel at the navy yard, Washington, with schooners Iris and Catherine.

U. S. S. MONTICELLO (LATE STAR),
Off Navy Yard, Washington, May 29, 1861.

SIR: I have the honor to report the arrival of this vessel under my command having left Hampton Roads in obedience to an order from Flag-Officer Pendergrast dated 27th instant, a copy of which order is herewith enclosed.*

The schooners *Iris* and *Catherine* have been delivered to the commandant of the navy yard.

We convoyed the transport steamer *Stars and Stripes* from the mouth of the Potomac to Washington. She has on board powder, etc.

I have the honor to be, your obedient servant,

HENRY EAGLE,
Captain, Commanding.

Hon. GIDEON WELLES,
Secretary of the Navy, Washington, D. C.

---

* See p. 275.

Order of the Secretary of the Navy to Commander Green, U. S. Navy, commanding U. S. ship Jamestown, to proceed to duty in the Atlantic Blockading Squadron.

NAVY DEPARTMENT, *May 29, 1861.*

SIR: The U. S. sloop of war *Jamestown*, under your command, is to form a part of the Atlantic Blockading Squadron.

As soon, therefore, as she is prepared for sea, you will proceed with her immediately to Hampton Roads and report to Flag-Officer Stringham, or the senior commanding officer present, for duty.

Before sailing from Philadelphia you will transmit to the Department a muster roll of the *Jamestown* and separate list of her officers.

I am, respectfully, your obedient servant,

GIDEON WELLES.

Commander CHAS. GREEN,
Commanding U. S. ship Jamestown, Philadelphia.

Report of Flag-Officer Pendergrast, U. S. Navy, commanding West India Squadron, regarding fresh-water supply.

U. S. FLAGSHIP CUMBERLAND,
Off Fortress Monroe, Va., May 29, 1861.

SIR: I have the honor to acknowledge the receipt of your letter under date of the 28th instant in relation to water.

I was glad to hear that the Department had made arrangements for supplying the squadron with fresh water, as I have learned since my last letter to you on that subject that the wells at Fortress Monroe are inadequate to supply the squadron, it being all needed for the use of the fortress.

I have not as yet received a copy of the agreement from the navy agent at Baltimore.

I have the honor to be, sir, very respectfully, your obedient servant,

G. J. PENDERGRAST,
Flag-Officer, Commanding West India Squadron.

Hon. GIDEON WELLES,
Secretary of the Navy, Washington, D. C.

Letter from Flag-Officer Pendergrast, U. S. Navy, commanding West India Squadron, to Acting Master Mather, commanding chartered steamer Quaker City, regarding distribution of letters to expected vessels.

U. S. FLAGSHIP CUMBERLAND,
Off Fortress Monroe, Va., May 29, 1861.

SIR: Enclosed you will find a lot of open letters for vessels expected to arrive at the capes of the Chesapeake. You will board all such vessels and deliver the letters to them.

If the vessels and cargoes are owned by the rebels or destined for a blockade port, you will capture them and not deliver their letters.

Very respectfully,

G. J. PENDERGRAST,
Flag-Officer, Commanding West India Squadron.

Captain MATHER,
Commanding Quaker City.

P. S.—Any vessel you may warn off, you will allow the pilot to deliver letters relating to her.

Letter from Flag-Officer Pendergrast, U. S. Navy, commanding West India Squadron, to Brigadier-General Huger, commanding at Norfolk, Va., regarding refugees.

U. S. FLAGSHIP CUMBERLAND,
Off Fortress Monroe, Va., June 3, 1861.

SIR: I send by Lieutenant Todd, flag-lieutenant of this squadron, under a flag of truce, the enclosed list of persons desirous of returning North, also several open letters and two closed, one for officials in Virginia; also two foreign letters. I would be pleased if you would state at what time they will be ready, and I will send for them if you desire it.

Very respectfully, your obedient servant,

G. J. PENDERGRAST,
Flag-Officer, Commanding West India Squadron.

Brigadier-General BENJAMIN HUGER,
Commanding Forces Norfolk Harbor.

Order of Flag-Officer Pendergrast, U. S. Navy, commanding West India Squadron, to Lieutenant Morris, U. S. Navy, to proceed to Norfolk, Va., with a flag of truce.

U. S. FLAGSHIP CUMBERLAND,
Off Fortress Monroe, Va., June 3, 1861.

SIR: You will proceed in the U. S. steam tug *Yankee*, under a flag of truce, for the purpose of taking Lieutenant Todd, bearer of dispatches to General Huger, to Norfolk.

You will stop when required by the authorities. You will keep the white flag flying all the time.

Very respectfully,

G. J. PENDERGRAST,
Flag-Officer, Commanding West India Squadron.

Lieutenant G. U. MORRIS, U. S. Navy.

Letter from Flag-Officer Pendergrast, U. S. Navy, commanding West India Squadron, to Captain Faunce, U. S. Revenue Marine, commanding U. S. S. Harriet Lane, regarding reconnoissance.

U. S. FLAGSHIP CUMBERLAND,
Off Fortress Monroe, Va., June 3, 1861.

SIR: I enclose to you for your information a copy of a letter* received by me; also a letter from General Butler.

I would be pleased if you will make a reconnoissance of the opposite shore at Newport News and report the result of your examination to me in writing,

Very respectfully,

G. J. PENDERGRAST,
Flag-Officer, Commanding West India Squadron.

Captain JOHN FAUNCE,
Commanding Harriet Lane.

---

*Not found.

Report of Lieutenant Braine, U. S. Navy, commanding U. S. S. Monticello, regarding the condition of that vessel.

U. S. S. MONTICELLO,
June 3, 1861.

SIR: I find, upon enquiry, that this vessel has not been docked for over twenty months. This, in connection with the fact that her bottom, now in sight, already shows signs of the attack of the worms, I would suggest the importance of her being sent to the nearest point to be docked, cleaned, and to receive a coat of patent verdigris, or coppered. She is not coppered, save a few feet below the water line from amidships forward, and in southern waters she would soon be rendered unfit for service.

I am, most respectfully, your obedient servant,

D. L. BRAINE, U. S. Navy,
Lieutenant.

Hon. GIDEON WELLES,
Secretary of the U. S. Navy, Washington, D. C.

Letter from Flag-Officer Pendergrast, U. S. Navy, commanding West India Squadron, to the judge of the U. S. district court, Baltimore, regarding captured schooner F. W. Johnson.

U. S. FLAGSHIP CUMBERLAND,
Off Fortress Monroe, June 4, 1861.

SIR: I herewith enclose to you the papers relating to the schooner *F. W. Johnson*, of Norfolk, Va., Captain E. M. Stoddard. The said schooner was captured by Captain Goldsborough, of the U. S. S. *Union*, under authority of Senior Flag-Officer Stringham, of the blockading squadron, in an inlet on the coast of North Carolina. Cargo, railroad iron.

The schooner will be sent to Baltimore in charge of Master's Mate Chisholm, of this ship.

Master's Mate Charles Martin, who was present at the capture, will go to Baltimore in the schooner.

Very respectfully, your obedient servant,

G. J. PENDERGRAST,
Flag-Officer, Commanding West India Squadron.

U. S. DISTRICT JUDGE,
Baltimore, Md.

Report of Flag-Officer Pendergrast, U. S. Navy, commanding West India Squadron, again urging the need of a paymaster.

U. S. FLAGSHIP CUMBERLAND,
Off Fortress Monroe, Va., June 4, 1861.

SIR: I have the honor to inform the Department that I have seen in the papers of this morning the resignation of Paymaster Harwood.

I would be pleased if the Department will send one here, even if it be a new appointment.

Utter confusion must ensue in the paymaster's department for the want of some one to take charge of it. It has now been left for nearly two months without a head.

Report of Captain Mercer, U. S. Navy, commanding U. S. S. Wabash, of the sailing of that vessel for Hampton Roads, Virginia.

U. S. STEAM FRIGATE WABASH,
At Sea, May 30, 1861.

SIR: I have the honor to inform the Department that, in obedience to its order of the 17th instant, this ship is at sea, on her way to Hampton Roads, Virginia.

I am, sir, very respectfully, your obedient servant,

SAMUEL MERCER, *Captain.*

Hon. GIDEON WELLES,
Secretary of the Navy, Washington City.

Report of Lieutenant Trenchard, U. S. Navy, commanding U. S. S. Keystone State, of the movements of that vessel on transport duty.

U. S. S. KEYSTONE STATE,
Washington, May 31, 1861.

SIR: I have the honor to report the arrival of this vessel, which sailed from here under instruction from the Department of the 16th instant.

The *Keystone State* left Washington on the 17th, reaching the squadron in Hampton Roads the following morning. I communicated at once with Flag-Officer Stringham in reference to the refugees from Norfolk, and he directed me to await their arrival.

At 2 p. m. on the 20th, 116 women and children were brought down from Norfolk under a flag of truce and placed on board this steamer.

The sailing of the vessel, in consequence of a northeast gale, was delayed until the morning of the 22d, when she left for New York, with the English bark *Hiawatha* in tow, by direction of Flag-Officer Stringham. The bark was seized for violating blockade. During the delay attending the sailing of the *Keystone State* 35 of the refugees were transferred by their own request to the Baltimore and Philadelphia steamer for passage. Accompanying this will be found a list of the names of the refugees. The steamer arrived at New York at 6 p. m., the 22d, and the passengers soon after landed in safety. The *Hiawatha* was anchored near the navy yard, in charge of her prize master, Lieutenant Russell, U. S. Navy. The munitions, etc., were landed at the navy yard, and after receiving on board the provisions and stores for Washington, together with articles shipped for the use of the squadron off Fortress Monroe, by order of Commodore Breese, we left the navy yard at New York at noon of the 29th and in twenty-four hours after reached Hampton Roads, communicated with Flag-Officer Pendergrast, and left for Washington, arriving at 4 o'clock p. m. this day.

I have the honor to be, very respectfully, your obedient servant,

STEPHEN D. TRENCHARD,
Lieutenant, Commanding.

Hon. GIDEON WELLES,
Secretary of the Navy, Washington, D. C.

[Enclosure.]

U. S. S. KEYSTONE STATE,
Washington, May 31, 1861.

SIR: The following list comprises the number and names of the refugees from Norfolk, who were received on board this vessel on the 20th day of May, 1861, off Old Point Comfort:

Mrs. Mary Welsh, sister, and 2 children; Mrs. Rosanna Riley and 5 children; Mrs. Catharine Barry and 5 children; Mrs. Michael Hall and

2 children; Mrs. Margaret Curran and 2 children; Mrs. Margaret O'Connor and 2 children; Mrs. E. A. Butt and 2 children; Mrs. Sarah Knapp, sister, and 2 children; Mrs. Ellen Nelson and 3 children; Mrs. Agnes Laurie and 4 children; Mrs. Catharine Lyon and 3 children; Mrs. Sarah McDonald and 5 children; Mrs. E. A. Smith and 4 children; Mrs. Virginia White and 2 children; Mrs. Martha Barnard and 3 children; Mrs. Margaret Rauh and 4 children; Miss Mary Gallagher; Miss Margaret Riley; Miss Delia Leonard; Miss B. Joyce; Miss Kate Wynne; Miss Jane Carroll; Miss Mary Greenwood; Mrs. Mary Lenieur; two children of James H. Hardwick; Charles H. Pettit; Mrs. Mary Hemsworth; Mrs. Bridget Maloney; * William E. Howard, wife, and 5 children; * Mrs. H. C. Turner and 3 children; * Mrs. Ann Oaks and child; * Mrs. M. A. Prickett and son; * Mrs. Sarah Nott, sister, and 2 children; * Mrs. Martha Barnum and 3 children; * Mrs. Annetta Baker and 1 child; * Mrs. Mary McHugh and 2 children; * Mrs. Mary Laughlin and 4 children; * Mrs. Mary Roach; * Mrs. Margaret Bryan.

Those marked with an asterisk (*) were transferred to the Baltimore boat on the 21st of May; the balance were landed at the navy yard, New York, on the 23d.

Transferred to the Baltimore boat	35
Landed at navy yard, New York	81
Total	116

Respectfully submitted.

STEPHEN D. TRENCHARD,
Lieutenant, Commanding.

Hon. GIDEON WELLES,
Secretary of the Navy, Washington, D. C.

Order of the Secretary of the Navy to Commander Lee, U. S. Navy, commanding U. S. S. Vandalia, to report for duty in the Atlantic Blockading Squadron.

NAVY DEPARTMENT, *May 31, 1861.*

SIR: The orders to you of the 20th instant are hereby revoked, and you will proceed with the *Vandalia* to Charleston, S. C., and report to Flag-Officer S. H. Stringham for duty in the Atlantic Blockading Squadron.

Should he not be there, you will remain off that port until further orders.

I am, respectfully, your obedient servant,

GIDEON WELLES.

Commander S. P. LEE,
Commanding U. S. S. Vandalia, New York.

Order of the Secretary of the Navy to Flag-Officer Pendergrast, U. S. Navy, commanding West India Squadron, regarding change of orders for U. S. S. Vandalia.

NAVY DEPARTMENT, *May 31, 1861.*

SIR: The Department has revoked its order to Commander Lee to report to you with the *Vandalia* for duty in the West India Squadron,

and directed him to proceed to Charleston, S. C., and join the Atlantic Blockading Squadron, Flag-Officer Stringham.

I am, respectfully, your obedient servant,

GIDEON WELLES.

Flag-Officer G. J. PENDERGRAST,
Commanding West India Squadron, Hampton Roads, Virginia.

Order of the Secretary of the Navy to Flag-Officer Stringham, U. S. Navy, commanding Atlantic Blockading Squadron, regarding clearances for vessels for Northern ports.

NAVY DEPARTMENT, *May 31, 1861.*

SIR: The Secretary of the Treasury has instructed the collector of customs at Alexandria, Va., to permit vessels from Northern ports to enter at that port and to grant clearances to those destined for Northern ports.

You will therefore permit all such vessels to proceed without molestation.

I am, respectfully, your obedient servant,

GIDEON WELLES.

Flag-Officer S. H. STRINGHAM, etc., or the
SENIOR COMMANDING OFFICER,
Hampton Roads.

Report of Lieutenant Parrott, U. S. Navy, commanding U. S. brig Perry, of the capture by that vessel of schooner Hannah M. Johnson, May 31, 1861.

U. S. BRIG PERRY,
At Sea, July 9, 1861.

SIR: I have the honor to report that on the 31st of May, 1861, we took as prize, about 15 miles to the southward and eastward of Cape Lookout, the schooner *Hannah M. Johnson*, of Greenport, N. Y., John C. Wells, master, for having cleared with a cargo from New Orleans on the 14th of May, 1861.

She was sent to New York under charge of Master's Mate C. E. Webster, and one man, Charles Anderson, seaman, was sent with him. Mr. Webster was ordered to deliver her and her papers into the charge of the U. S. marshal, to report to the commandant of the navy yard at New York, and to rejoin this vessel, with the said Anderson, by the first public conveyance.

I am, very respectfully, your obedient servant,

E. G. PARROTT,
Lieutenant, Commanding.

Senior Flag-Officer S. H. STRINGHAM,
U. S. S. Minnesota.

Report of Lieutenant Sartori, U. S. Navy, commanding U. S. S. Flag, regarding transportation of gunpowder to Fortress Monroe.

U. S. S. FLAG,
Off Bombay Hook, Delaware Bay, May 31, 1861.

SIR: I have the honor to inform the Department that I left the navy yard on the 29th instant, and, after taking in ammunition from the

and I desire to have the wishes of the Department in regard to her. I would also state that the *Yankee* arrived here without a commander, and I have been compelled to place a lieutenant from this ship on board of her, which I can not well spare, and would be pleased if the Department will order a suitable commander for her.

I have the honor to be, very respectfully, your obedient servant,

G. J. PENDERGRAST,
Flag-Officer, Commanding West India Squadron.

Hon. GIDEON WELLES,
Secretary of the Navy.

Reconnoissance by the U. S. S. Harriet Lane, Captain John Faunce, U. S. Revenue Marine, of Hampton Roads and vicinity, June 4, and an engagement with Confederate battery at Pig Point, Va., June 5, 1861.

Report of Flag-Officer Pendergrast, U. S. Navy, commanding West India Squadron, transmitting reports of Captain Faunce, U. S. Revenue Marine, commanding U. S. S. Harriet Lane.

U. S. FLAGSHIP CUMBERLAND,
Off Fortress Monroe, Va., June 9, 1861.

SIR: I have the honor herewith to enclose to you the reports of Captain John Faunce, of the U. S. S. *Harriet Lane*, of several reconnoissances made by him; also a list of the wounded in the engagement at Pig Point.

I have the honor to be, very respectfully, your obedient servant,

G. J. PENDERGRAST,
Flag-Officer, Commanding West India Squadron.

Hon. GIDEON WELLES,
Secretary of the Navy, Washington, D. C.

[Enclosures.]

U. S. S. HARRIET LANE,
Hampton Roads, June 4, 1861.

SIR: I have the honor to acknowledge the receipt of your communication of the 3d instant, with its enclosures. In reply I have to say that I am confident that no steamboat or tug has passed down James River since I have been placed at Newport News to assist in its protection. There is a tug [that] comes down from Norfolk every night as far as the batteries at Sewell's Point and returns in the morning, always under cover of the guns of the above-named place. Craney Island Flats prevent my getting said steamer within range of the guns of this vessel. I would respectfully state that I have again made a careful reconnoissance of the shore opposite Newport News, and have to report that there is a sand battery on the south side of Nansemond River at Pig Point, prepared to mount seven guns, but it is not yet finished, and I am inclined to think that no guns are yet mounted, although there appears to be about fifty men employed in completing the work. There is also a battery on the south side of Chuckatuck Creek preparing for four guns. To the eastward of Nansemond River, at the mouth of Hog Creek, there is a field battery of three guns. From that point to Craney Island, a distance of about 3½ miles, I see nothing indicating guns or batteries. I have examined James River as high as Day's Point (10 or 12 miles above its mouth) and no signs of fortifications can be seen. I have tried during the morning to draw the fire of the batteries by

Letter from Lieutenant Lowry, U. S. Navy, U. S. S. Pawnee, to the Secretary of the Navy, suggesting means for making effectual the blockade of Norfolk and Richmond, Va.

U. S. S. PAWNEE,
Potomac River, June 1, 1861.

SIR: I respectfully submit to the consideration of the Government of the United States the following information and suggestions:

By the enclosed pamphlet* and maps* it will be perceived that Norfolk and Richmond are not yet blockaded or completely cut off from the sea. They have a back outlet by way of the Chesapeake and Albemarle Canal. By that water route vessels of any draft, by lightening, buoying, or floating, can be passed from Richmond or Norfolk through said work, which is 60 feet wide and has an average depth of 8 feet, into North Landing River; thence, through Coanjock Bay, by the North Carolina cut of the canal, into North River, through Albemarle, Croatan, and Pamlico sounds, to the entrance of Ocracoke Inlet, when, with little nautical skill, vessels of heavy drafts can be easily passed into the ocean. A simple inspection of the maps will convince the naval officer of the great advantages and facilities the enemy will have in possessing this vast internal water navigation unmolested, thereby having an egress and retreat to and from the sea for vessels loaded with provisions and munitions, and an easy harbor for prizes or captured goods taken out of prizes of too heavy a draft to cross the inlet, or a safe refuge for privateers from our heavy ships of war. Already are their privateers preying upon our commerce, and from these very waters issue with impunity.

Our statistics inform us that a great portion of our coasting trade frequents the waters of North Carolina. We are also informed that the waters of these inland sounds wash the shores of a vast soil, abounding in rich productions, as cotton, corn, grain, lumber, turpentine, and provisions of all kinds. The fisheries are of great value and extensively worked. The shores of Currituck are lined with large and expensive hotels and cottages, where in summer crowds of wealthy resort for summer bathing. Nag's Head is a place of great importance in this respect. The waters are covered with vessels carrying on inland trade, while many steamers ply to and from the many towns and villages. All this being the case, and having an uninterrupted communication with Norfolk and Richmond by water, the effect of a blockade from the Rip Raps will to a great extent be evaded, except as against our own Northern commerce and of foreign nations. I believe it to be my duty to bring to the notice of the Government facts which may have been overlooked, and to suggest that an effective blockade of Ocracoke Inlet and Beaufort is absolutely [necessary] to cut Norfolk and Richmond from communication with the sea, and to prevent the rebel privateers from putting to sea from the waters of North Carolina, and effectually blockade her ports. In my opinion, this can be accomplished by the stationing of two vessels of war outside—of the *Pawnee* class—and by the equipment of several steam canal boats of the type of the *J. Jerome* and *Diamond State*, now plying to this port. These vessels draw little water, are strong, can carry a rifle gun, and sufficient stores and men to make them efficient enough to meet anything in the waters of North Carolina. In case of meeting overpowering numbers, intending to board, they are sufficiently high out of water to make that hazardous, and with the larger vessel in the offing they can always have a base to fall back

* Not found.

Report of Commander Pegram, Virginia navy, commanding Pig Point battery, of engagement with U. S. S. Harriet Lane.

PIG POINT BATTERY, *June 5, 1861—9 a. m.*

SIR: We have just had a smart brush with the *Harriet Lane* and drove her off. I think several shot were put in her hull. The engagement lasted about twenty minutes.

The *Harriet Lane* commenced the engagement by firing an XI [inch] shell.

Respectfully submitted.

R. B. PEGRAM,
Commander, Virginia Navy.

Flag-Officer F. FORREST.

Report of Brigadier-General Huger, C. S. Army, commanding at Norfolk, Va., regarding attack on Pig Point battery.

HEADQUARTERS FORCES OF VIRGINIA,
Norfolk, Va., June 6 [5], 1861.

SIR: The steamer *Harriet Lane* was occupied yesterday in reconnoitering our battery at Pig Point, mouth of the Nansemond River, and this morning took up a position and opened fire upon the battery, doing but little damage and injuring no one. The battery replied, and after firing some twenty shots the steamer hauled off suddenly and proceeded to Old Point.

Very respectfully, your obedient servant,

BENJ. HUGER,
Brigadier-General, Commanding.

Major-General R. E. LEE,
Commanding Forces of Virginia.

P. S.—One gun, a 32-pounder, burst, without injuring any one. I have sent two to replace it.

Further report of Brigadier-General Huger, C. S. Army, commanding at Norfolk, Va., regarding attack on Pig Point battery.

HEADQUARTERS FORCES NORFOLK HARBOR,
Norfolk, Va., June 7, 1861.

SIR: I have received information that on the 5th instant the *Harriet Lane* was hit twice by the battery at Pig Point. One shot struck the waterways, passed through a tub of musket balls, damaged the foremast, and went out through the top of the rail. Six men were wounded by the scattering of the musket balls.

Very respectfully, your obedient servant,

BENJ. HUGER,
Brigadier-General, Commanding.

Major-General R. E. LEE,
Commanding Forces of Virginia, Richmond, Va.

Report of Commander Pegram, Virginia navy, of the attack by U. S. S. Harriet Lane on Pig Point battery.

PIG POINT BATTERY, *June 5, 1861.*

SIR: I have the honor to report that the Federal steamer *Harriet Lane* stood within range of this battery at 9 a. m. to-day, and, taking a position at the distance of 1½ miles, commenced firing upon us with

of the chartered steamer *Peabody*, you accompanied the memorable expedition under Flag-Officer Stringham, which resulted in the first naval victory of the war.

The changes and activity of the operations of that period caused me to omit the thanks for the suggestions and information then communicated, but which were duly appreciated, and for which it is my pleasure and duty now to make this acknowledgment.

Very respectfully,

GIDEON WELLES,
Secretary of the Navy.

Lieutenant-Commander R. B. LOWRY, U. S. Navy,
Washington, D. C.

Request from Flag-Officer Pendergrast, U. S. Navy, commanding West India Squadron, to be furnished with maps of Hampton Roads and James River.

U. S. FLAGSHIP CUMBERLAND,
Off Fortress Monroe, Va., June 2, 1861.

SIR: I would respectfully inform the Department that I have understood that the original sheets, on a large scale, of a survey of Hampton Roads and James River are in possession of the U. S. Coast Survey Office, and I would be pleased if the Department will forward them to me, as we are very much in need of them.

I have the honor to be, very respectfully, sir, your obedient servant,

G. J. PENDERGRAST,
Flag-Officer, Commanding West India Squadron.

Hon. GIDEON WELLES,
Secretary of the Navy, Washington, D. C.

Report of Flag-Officer Pendergrast, U. S. Navy, commanding West India Squadron, of the arrival at Hampton Roads of the U. S. S. Union with a prize.

U. S. FLAGSHIP CUMBERLAND,
Off Fortress Monroe, Va., June 2, 1861.

SIR: I have the honor to inform the Department that the U. S. S. *Union*, Captain Goldsborough, arrived here this morning, after a cruise off Savannah and Charleston, with a prize,* captured off the capes of the Chesapeake, loaded with railroad iron. The *Union* left Flag-Officer Stringham, in the *Minnesota*, off Charleston. The *Union* is now coaling and will return to her station as soon as possible.

I have the honor to be, very respectfully, your obedient servant,

G. J. PENDERGRAST,
Flag-Officer, Commanding West India Squadron.

Hon. GIDEON WELLES,
Secretary of the Navy, Washington, D. C.

---

* See pp. 695, 707.

Grande, Cuba, bound to Baltimore, Md. Cargo, sugar. Enclosed also you will find a list of the papers. The said bark was seized by the U. S. S. *Quaker City*, Commander Overton Carr, U. S. Navy, at the capes of the Chesapeake, as belonging to citizens of South Carolina, a seceded State and at war with the United States.

The said seizure was made by my authority and under instructions from me. The bark will be sent to New York in charge of Acting Master Gifford, U. S. Navy. Ely [M.] Boggs, third mate of the *Quaker City*, who was present at the capture, will go to New York in the bark.

Very respectfully,

G. J. PENDERGRAST,
Flag-Officer, Commanding West India Squadron.

U. S. DISTRICT JUDGE,
New York.

Letter from Flag-Officer Pendergrast, U. S. Navy, commanding West India Squadron, to the Acting Quartermaster-General, U. S. Army, regarding schooner Arcola.

U. S. FLAGSHIP CUMBERLAND,
Off Fortress Monroe, Va., June 5, 1861.

SIR: Your communication* of this date has been received. I beg leave to state in reply that I have determined to send the *Arcola* to Baltimore to the U. S. district judge for such action as he may deem necessary. She was seized at the request and for the use of the fortress.

Very respectfully,

G. J. PENDERGRAST,
Flag-Officer, Commanding West India Squadron.

Captain TALLMADGE, U. S. Army,
Acting Quartermaster-General.

Report of Flag-Officer Pendergrast, U. S. Navy, commanding West India Squadron, regarding the U. S. steamers Quaker City and Young America.

U. S. FLAGSHIP CUMBERLAND,
Off Fortress Monroe, Va., June 5, 1861.

SIR: I would respectfully call the attention of the Department to my dispatch No. 84, in relation to the U. S. S. *Quaker City* and steam tug *Young America*, and ask the early consideration of the Department.

I have the honor to be, very respectfully, sir, your obedient servant,

G. J. PENDERGRAST,
Flag-Officer, Commanding West India Squadron.

Hon. GIDEON WELLES,
Secretary of the Navy, Washington, D. C.

Instructions from the Secretary of the Navy to Flag-Officer Stringham, U. S. Navy, commanding Atlantic Blockading Squadron, regarding prevention of all commercial intercourse with Southern ports.

NAVY DEPARTMENT, *June 5, 1861.*

SIR: The suggestions in your dispatch No. 23 and others of previous date in reference to the blockade or interruption of communication in

---

*Not found.

take in cargo and go to sea. This I could not allow. I finally permitted the vessel to go to sea in ballast.

The next vessel stopped was May 31, the English schooner *Eliza and Catherine*, with rice and lumber, from Charleston, bound to Harbor Island. I ordered her back, with permission to discharge cargo and go in ballast, but reversed this decision and finally permitted her to go with cargo, on the personal representation to me by the British consul, Robert Bunch, esq., on his word of honor, and in writing, that Captain McKean, of the *Niagara*, had told him "twenty days would be permitted for vessels to depart," with the addition that "his senior (myself) might change the terms." I did not feel disposed to alter the understanding and arrangement, as I have endeavored from the commencement, as I shall continue in the future, to inconvenience as little as possible neutrals.

On the 2d June I warned off a Bremen bark, the *Copernicus*, from Bremen for Charleston, in ballast.

On the 3d of June, warned off the Spanish bark *Teresa Cubana*, from Barcelona for Charleston, in ballast.

Nothing thus far has gone in or out without my permission, except small vessels, which our depth of water will not allow us to overtake.

June 5, about 10 o'clock a. m., our masthead lookout made a sail, which proved to be the U. S. brig *Perry*, Lieutenant Commanding Parrott, with a prize in company, it being a piratical schooner of about 50 tons, called the *Savannah*, hailing from Charleston, S. C., with a commission from Jefferson Davis, dated Montgomery, May 18, 1861, commanded by T. Harrison Baker, and a crew of nineteen men. She had placed some of her crew on board a prize, the brig *Joseph*, of Rockland, Me., from Cardenas, with sugar, which she had captured on the 3d instant, and ordered to Beaufort, S. C. The captain of the *Joseph*, retained on board the schooner, now goes to New York in company with the prize master.

I herewith enclose a copy of Lieutenant Commanding Parrott's report.*

I shall order the schooner to New York in charge of Prize Master R. S. McCook, midshipman.

I beg leave most respectfully to remind the Department that I am very much in want of vessels.

The prisoners of the schooner *Savannah*, captain, lieutenant, sailing master, purser, and 10 men, 6 having been sent away in their prize, the *Joseph*, are on board the *Minnesota*, and will be sent on the first opportunity to a Northern port.

The *Perry* has proceeded to her station off Fernandina.

Very respectfully, your obedient servant,

S. H. STRINGHAM,
Flag-Officer, Atlantic Blockading Squadron.

Hon. GIDEON WELLES,
Secretary of Navy.

[Enclosure.]

Jefferson Davis, President of the Confederate States of America, to all who shall see these presents, greeting:

Know ye that by virtue of the power vested in me by law, I have commissioned and do hereby commission, have authorized and do hereby authorize the schooner or vessel called the *Savannah* (more particularly described in the schedule hereunto annexed) whereof T. Harrison Baker is commander, to act as a private armed vessel in the service

* See vol. 1, p. 29.

yourself. Could the Government possess itself of an accessible position at some intermediate point between the Chesapeake and Key West, where it could obtain a supply of water and perhaps have a coal depot, it would be an important acquisition to the Navy. Brunswick and other places have been named, but the Department is unadvised in regard to the present defenses, or whether a demonstration could be made at either with certainty and effect. You can doubtless, through some of your command, obtain more definite information and form a more correct conclusion as to taking action than could be expected here. Any information or suggestions from you in regard to the matters herein communicated, or that appertain to the great objects committed to you, will at all times be acceptable.

I can not close without adding that could we by a sudden and bold dash get possession of Brunswick, Fernandina, or some other place in that quarter which we could retain, those who accomplished the work would thereby obtain éclat, and the Navy and country would be greatly benefited.

I am, very respectfully, your obedient servant,

GIDEON WELLES,
Secretary Navy.

Commodore S. H. STRINGHAM,
Commanding Atlantic Blockading Squadron.

[Enclosure.]

Confidential.] GUILFORD, CONN., *June 2, 1861.*

DEAR SIR: I am in possession of facts respecting the port of Georgetown, S. C., which I feel it my duty to communicate to your Department, and I write at the request of Hon. John Woodruff, ex-Member of Congress from this district. Perhaps you may recollect, sir, that I have spent a number of years in Georgetown, S. C., and a friend of mine has just returned from there.

They have in the jail of that place the collector and his deputy.

John Merriman, the collector, has been confined since last December for merely writing to the Department his intention of clearing vessels from that port as before, under the United States, and they are now threatening to hang them.

There is a man in that place who has a commission from Jeff. Davis for privateering, and is about fitting out a craft for that purpose.

A great proportion of the rice grown in South Carolina is raised in that vicinity, and is carried by steamers to Charleston. The steamers which carry the rice run the blockade in foggy weather by keeping close inshore.

We have a number of Northern merchants there, whose goods have just been confiscated and they ordered to leave. They are now ready to volunteer their services to our Government to go back and open the jail doors and liberate those true-hearted patriots, provided the Government will send a steamer. The bar affords 11 feet of water at high tide. It would require but a small force to accomplish it.

If, sir, you should consider these matters of sufficient importance for your attention, I can give you every particular respecting the place, the entrance, and a good pilot over the bar.

Yours, very respectfully,

F. A. DRAKE.

Hon. GIDEON WELLES,
Secretary Navy.

Letter from the Secretary of the Navy to Flag-Officer Stringham, U. S. Navy, commanding Atlantic Blockading Squadron, transmitting information regarding the U. S. S. Harriet Lane.

NAVY DEPARTMENT, *June 6, 1861.*

SIR: Herewith enclosed is a copy of a letter addressed to the Secretary of the Treasury by Captain Howard, of the U. S. Revenue Marine, in relation to the armament of the *Harriet Lane.*

The Department would be pleased to have your views on the subject.

I am, respectfully, your obedient servant,

GIDEON WELLES.

Flag-Officer S. H. STRINGHAM,
Commanding Atlantic Blockading Squadron.

[Enclosure.]

TREASURY DEPARTMENT, *June 3, 1861.*

SIR: I have the honor to transmit copy of a letter from Captain William A. Howard, U. S. Revenue Marine, relative to the armament of the *Harriet Lane.*

I would remark that any expenditures made on account of the revenue vessels while serving under the orders of the Navy Department, are by law to be borne by said Department, and therefore it is deemed only necessary to advise you of the inadequacy of the battery of the *Harriet Lane* for her present duties, to have the defect promptly remedied, which is respectfully requested.

I am, very respectfully,

S. P. CHASE,
Secretary of the Treasury.

Hon. GIDEON WELLES,
Secretary of the Navy.

[Subenclosure.]

NEW YORK, *June 1, 1861.*

SIR: The *Harriet Lane* having a prominent position in the blockading squadron, and liable any hour to be brought into action, I consider it my duty, for the safety and honor of our flag, to report to you she is inadequately armed to meet such vessels and batteries she is most likely to engage, and respectfully request she may be withdrawn from the fleet long enough to exchange her battery of three 32-pounder guns and four 24-pounder howitzers for four 9-inch and one rifled 8-inch gun (the latter I have ready for her) and two 24-pounder howitzers. The Navy Department will no doubt be willing to make the desired and necessary change.

I have the honor to be, sir, very respectfully, your obedient servant,

W. A. HOWARD,
Captain, U. S. Revenue Marine.

Hon. S. P. CHASE,
Secretary of Treasury, Washington.

[Endorsement.]

There are at present no 9-inch guns, the last having been just delivered to the War Department; it is not, therefore, possible at this time to comply with Captain Howard's request.

Very respectfully,

A. A. HARWOOD,
Chief of Bureau.

Letter from the Secretary of the Navy to Flag-Officer Pendergrast, U. S. Navy, commanding West India Squadron, regarding repairs to the U. S. S. Yankee.

NAVY DEPARTMENT, *June 6, 1861.*

SIR: Your No. 87 has been received. There are no facilities here for coppering vessels, and very few, with other duties, for repairing them. When you can spare the *Yankee* she might be sent to Philadelphia for the purpose of being coppered. With regard to a commander for her, the following is an extract from instructions given to Flag-Officer Stringham May 18:

The officers, crew, and engineers now serving on board are to continue, and will be paid by her present owners up to the 25th of this month (May), inclusive, when you will make such temporary appointments for the *Yankee* as she may require. The conditions stated in the copy of instructions sent to you on the 16th instant refer rather to the large purchased and chartered vessels. Such as the *Yankee* will not require so many officers, and it is left to your discretion to arrange them.

The owners of the *Quaker City* keep that vessel in repair and the Government is not called upon for any of her expenses.

I am, respectfully, your obedient servant,

GIDEON WELLES.

Flag-Officer G. J. PENDERGRAST,
Commanding West India Squadron, Hampton Roads.

Order of Flag-Officer Pendergrast, U. S. Navy, commanding West India Squadron, to Lieutenant Selfridge, U. S. Navy, to assume temporary command of the U. S. S. Yankee.

U. S. FLAGSHIP CUMBERLAND,
Off Fortress Monroe, Va., June 6, 1861.

SIR: You are hereby appointed temporary commander of the steam tug *Yankee* until the pleasure of the Department is known.

Very respectfully,

G. J. PENDERGRAST,
Flag-Officer, Commanding West India Squadron.

Lieutenant THOS. O. SELFRIDGE, U. S. Navy.

Letter of thanks from Flag-Officer Pendergrast, U. S. Navy, commanding West India Squadron, to Brigadier-General Huger, C. S. Army, commanding at Norfolk, Va.

U. S. FLAGSHIP CUMBERLAND,
Off Fortress Monroe, Va., June 6, 1861.

SIR: Your communication* of this date, under a flag of truce, has been received. You will accept my thanks for the prompt manner in which you have complied with my request. Your request in regard to Mrs. Major [General?] Gwynn shall be complied with, and I will see that she receives a safe convoy to her destination. I have given my permission to Captain Russell, of the Baltimore steamer, to visit Norfolk under the flag of truce, if the officer in charge will receive him.

Very respectfully, your obedient servant,

G. J. PENDERGRAST,
Flag-Officer, Commanding West India Squadron.

Brigadier-General BENJAMIN HUGER,
Commanding Forces, Norfolk Harbor.

---

*Not found.

There is a large amount of money in the safe of this ship which I can not trust in the hands of irresponsible persons without authority from the Department.

I have the honor to be, very respectfully, your obedient servant,

G. J. PENDERGRAST,
Flag-Officer, Commanding West India Squadron.

Hon. GIDEON WELLES,
Secretary of the Navy.

Instructions from the Secretary of the Navy to Flag-Officer Pendergrast, U. S. Navy, commanding West India Squadron, regarding affairs of his command.

NAVY DEPARTMENT, *June 4, 1861.*

SIR: Your Nos. 83 and 84 have been received.

The Department has received no request from Commander Goldsborough, nor anything more in relation to his cruise or the capture of a prize than is stated in your letter. The name of such prize and the exact date of capture should always be given. Can you inform the Department of the exact date of the capture of the *Haxall?*

The name of Paymaster Harwood, who was under orders to the *Cumberland*, having been stricken from the rolls of the Navy, another paymaster will be ordered to that vessel in a few days.

You will order the *Young America* to the Washington navy yard for repairs. Commander Dahlgren has been instructed to send the *Anacostia* to Hampton Roads as a substitute until the *Young America* returns.

It is very desirable not to send the *Quaker City* to New York unless the necessity is imperative. You will see by the charter party of that vessel, sent you a few days since, that the owners run her, repair her, furnish her all the supplies, and man her.

The Navy furnishes the commanding officer.

Does the mail boat arrive at Old Point daily from Baltimore?

Your services will be required in the Chesapeake until the Atlantic Blockading Squadron is sufficiently increased. In the meantime the *Macedonian* and *Bainbridge* will receive orders from the Department.

Your Nos. 76, 77, 78, 79, and 80 have also been received. You are authorized to employ a pilot, as requested in your No. 80.

I am, respectfully, etc.,

GIDEON WELLES.

Flag-Officer G. J. PENDERGRAST,
Commanding West India Squadron, Hampton Roads.

Report of Flag-Officer Pendergrast, U. S. Navy, commanding West India Squadron, regarding U. S. S. Yankee.

U. S. FLAGSHIP CUMBERLAND,
Off Fortress Monroe, Va., June 4, 1861.

SIR: I beg leave to inform the Department that the steam tug *Yankee* arrived here on the 2d instant, but was not repaired or coppered as I requested. If she remains here she will be eaten up by worms,

[Enclosure.]

U. S. S. QUAKER CITY,
Hampton Roads, June 7, 1861.

SIR: Pursuant to your letter of instructions, I have made an examination of the boilers and engine of the U. S. steam tug *Yankee* and find the engine entirely out of order and unfit for service.

I find that the steam and exhaust valves leak so badly as to necessitate their being faced or newly ground in; that the cam is so much worn as to require entire renewal. The air pump is also not in good order, the floating top requiring a new face. The force pumps of the engine require overhauling. All the connections of the engine require to be fitted with new brasses. The steam or donkey pump requires thorough overhauling, as it will not work either on the sea or bilge. I find that the boiler is so much exposed as to require covering with felt and canvas to prevent condensation, and also that the safety valve leaks so badly as to render it impossible to keep any pressure of steam on the boiler. The base of the smoke pipe requires an apron fitted to it so as to prevent rain or other water from running over the steam drum or boiler.

Most respectfully, yours, obediently,

S. FARRER,
Chief Engineer U. S. S. Quaker City.

Flag-Officer PENDERGRAST, U. S. Navy,
Commanding U. S. Naval Forces, Hampton Roads.

Order of the Secretary of the Navy to Flag-Officer Stringham, U. S. Navy, commanding Atlantic Blockading Squadron, designating additional vessels for his command.

NAVY DEPARTMENT, *June 8, 1861.*

SIR: The following additional vessels have been ordered to the Atlantic Blockading Squadron: *Jamestown*, Commander Charles Green; *Vandalia*, Commander S. P. Lee; *Dale*, Commander E. M. Yard; *Daylight*, Commander Samuel Lockwood.

The *Vandalia* has sailed from New York for the coast of South Carolina, with orders to report to you.

Should she not find you off Charleston, she was directed to remain there until further orders.

The other vessels are to proceed to Hampton Roads.

I am, respectfully, your obedient servant,

GIDEON WELLES.

Flag-Officer S. H. STRINGHAM,
Commanding Atlantic Blockading Squadron, Hampton Roads.

Report of Flag-Officer Pendergrast, U. S. Navy, commanding West India Squadron, giving further information regarding capture of schooner F. W. Johnson.

U. S. FLAGSHIP CUMBERLAND,
Off Fortress Monroe, Va., June 8, 1861.

SIR: I have the honor to acknowledge the receipt of the Department's letter* under date of the 4th instant. I beg to inform the Department that Commander Goldsborough, of the U. S. S. *Union*, reported

*See p. 696.

UNITED STATES STEAMER HARRIET LANE.

I think it very doubtful of getting a paymaster from that source and hope that the Department will send one without delay, as we are very much in need of such an officer.

I have the honor to be, sir, very respectfully, your obedient servant,

G. J. PENDERGRAST,
Flag-Officer, Commanding West India Squadron.

Hon. GIDEON WELLES,
Secretary of the Navy, Washington, D. C.

Report of Flag-Officer Pendergrast, U. S. Navy, commanding West India Squadron, of the capture of a small sloop by the U. S. S. Harriet Lane.

U. S. FLAGSHIP CUMBERLAND,
Off Fortress Monroe, Va., June 8, 1861.

SIR: I have the honor to inform the Department of the capture of a small sloop of about 15 or 20 tons on the 5th instant by the U. S. S. *Harriet Lane.* The said sloop was loaded with provisions, and for some time past has been engaged in carrying marketing from Smithfield to Norfolk. I have directed that she be used by the *Harriet Lane* at the mouth of James River. She is of small size and value and is not worth sending to a court. I would be pleased to have the instructions of the Department in regard to her. An inventory of the articles on board has been taken. The captain of the sloop, having been engaged in a business that I am not altogether satisfied with, I have detained him a prisoner on board of this ship; the other two men remain on board of the sloop.

I have the honor to be, very respectfully, sir, your obedient servant,

G. J. PENDERGRAST,
Flag-Officer, Commanding West India Squadron.

Hon. GIDEON WELLES,
Secretary of the Navy, Washington, D. C.

Letter of approval from the Secretary of the Navy to Flag-Officer Pendergrast, U. S. Navy, commanding West India Squadron.

NAVY DEPARTMENT, *June 12, 1861.*

SIR: Your No. 92 has been received.

The Department approves your course pursued with the prize of the *Harriet Lane*, if she was violating the blockade or belonged to the insurgents.

I am, respectfully, your obedient servant,

GIDEON WELLES.

Flag-Officer G. J. PENDERGRAST,
Commanding West India Squadron, Hampton Roads, Virginia.

Report of Commander Lockwood, U. S. Navy, commanding U. S. S. Daylight, of the sailing of that vessel from the navy yard, New York.

U. S. PROPELLER DAYLIGHT,
At Sea off Sandy Hook, June 8, 1861.

SIR: I have the honor to forward herewith enclosed a list of the officers, also a muster roll of the officers and crew of the U. S. propeller *Daylight*, under my command.

approaching as near to them as possible, say from one-half to three-quarters of a mile, but was unsuccessful, which convinces me that they are not ready to commence an attack.

The above is respectfully submitted by your obedient servant,

JOHN FAUNCE,
Commanding U. S. S. Harriet Lane.

G. J. PENDERGRAST,
Flag-Officer, Commanding West India Squadron,
off Fortress Monroe, Va.

—

U. S. S. HARRIET LANE,
Hampton Roads, June 5, 1861.

SIR: In obedience to orders from General Butler to make a reconnoissance of Pig Point and vicinity, etc., I this morning at 4:50 got underway with my ship from off Newport News and stood toward Craney Island, steaming close in and along the shore. When off Pig Point I observed near the beach a number of men apparently engaged in transporting guns by means of ox teams and wheel carriages, while others were seen near the embrasures of the battery with the secession flag flying over them. At 8:30 a. m. I approached as close to the battery as the flats would allow, a distance of about 1,800 yards, and opened fire, which was promptly returned by the rebels, from, I judge, seven guns, four of which were either 42 or 32 pounders and the others appeared to be 24-pounder howitzers. Two of the shot took effect on the vessel, one passing through the plank-sheer forward of the fore rigging on the port side and out through the starboard bulwarks; the other through the fore rigging, grazing the foremast. Several of their heavy shot passed over the vessel and struck some distance beyond. The shell from their howitzers all fell short. Thirty rounds of shot and shell were thrown by us, nearly all of which fell short; some few, however, were observed to strike within the embrasures. The rebels fired about fifty shot and shell. Having accomplished my object of drawing the fire of the enemy, and thereby discovering the strength of their battery, and finding the range of my guns less than theirs, after an engagement of forty-five minutes I drew off out of range. From the enclosed report of the surgeon you will perceive that five of our men were wounded. It affords me much pleasure to bear testimony to the gallant conduct of the officers and men under my command.

Respectfully submitted.

JOHN FAUNCE, *Captain.*

Flag-Officer G. J. PENDERGRAST,
Commanding West India Squadron, off Fortress Monroe, Va.

—

U. S. S. HARRIET LANE, *June 5, 1861.*

List of wounded.

1. John Brainard (seaman), severe splinter wound in left leg.
2. Nicholas Payne (captain after guard), severe splinter wounds of left hand and face.
3. Peter Woods (ordinary seaman), slight splinter wound of leg.
4. Chris. Kane (seaman), splintered face and leg—slight.
5. Charles Johnson (ordinary seaman), severe contusion.

N. L. CAMPBELL, M. D.,
Surgeon.

Captain FAUNCE.

Report of Lieutenant Braine, U. S. Navy, commanding U. S. S. Monticello, of the readiness of that vessel for service.

U. S. S. MONTICELLO,
Washington Navy Yard, June 8, 1861.

SIR: I have the honor to report that U. S. S. *Monticello* is ready in the most essential points for immediate service.

I can start with one hour's notice.

I have the honor to be, your obedient servant,

D. L. BRAINE, U. S. Navy,
Lieutenant in Charge, U. S. S. Monticello.

Hon. GIDEON WELLES,
Secretary of the Navy, Washington, D. C.

Report of Flag-Officer Pendergrast, U. S. Navy, commanding West India Squadron, of the arrival of United States vessels at Hampton Roads.

U. S. FLAGSHIP CUMBERLAND,
Off Fortress Monroe, Va., June 9, 1861.

SIR: I have the honor to inform the Department that the U. S. S. *Flag*, Lieutenant Commanding Sartori, arrived here on the 2d instant and the U. S. S. *Union*, Commander Goldsborough, on the 3d instant, with a prize already referred to in my dispatch No. 90. They both sailed on the evening of the 3d to join Flag-Officer Stringham. I would also report to the Department the arrival of the U. S. S. *Anacostia*, Lieutenant Commanding N. Collins, on the 7th instant.

I have the honor to be, very respectfully, sir, your obedient servant,

G. J. PENDERGRAST,
Flag-Officer, Commanding West India Squadron.

Hon. GIDEON WELLES,
Secretary of the Navy, Washington, D. C.

Order of Flag-Officer Pendergrast, U. S. Navy, commanding West India Squadron, to Lieutenant Selfridge, U. S. Navy, commanding U. S. S. Yankee, to proceed with that vessel to Philadelphia for repairs.

U. S. FLAGSHIP CUMBERLAND,
Off Fortress Monroe, June 9, 1861.

SIR: By direction of the Secretary of the Navy, you will proceed in the steam tug *Yankee* to Philadelphia navy yard for the purpose of having her coppered and machinery repaired.

You will report yourself to the commandant of the navy yard and use all possible dispatch in having your vessel repaired and return to this place as soon as possible.

Very respectfully,

G. J. PENDERGRAST,
Flag-Officer, Commanding West India Squadron.

Lieutenant THOS. O. SELFRIDGE, U. S. Navy,
Commanding Steam Tug Yankee.

shot and shell from 11-inch shell gun and 32-pounders. She fired about thirty-three shot and shell, many of them well directed, but no one of our party was hurt, nor did the fortifications sustain any injury. A 32-pounder shot struck the muzzle of one of our 8-inch shell guns and cracked it from the face to the chase ring. The gun at the same time was run in for loading, and although the shot was broken into three fragments in the midst of our men, no one sustained the slightest injury. A number of shells exploded near and around us, but all fell harmless to the ground. In return, we fired twenty-three shot and shell. Four or five were seen to take effect in the hull of the steamer, and I am inclined to believe did her some injury, from the manner in which she moved.

For men who had never before been in action, the Portsmouth Rifles were remarkably cool and self-possessed, and after a few rounds got the range of the enemy and fired admirably well. Every officer and man behaved in the most spirited and creditable manner, and were so regardless of danger that I had often to interpose my authority to prevent their exposing themselves unnecessarily to the enemy's fire. The action lasted about fifteen or twenty minutes.

I am, very respectfully, your obedient servant,

R. B. PEGRAM,
Commander, Virginia Navy.

Commodore FRENCH FORREST,
Virginia Navy, Commanding Naval Station, Norfolk, Va.

Letter from Flag-Officer Pendergrast, U. S. Navy, commanding West India Squadron, to Major-General Butler, U. S. Army, regarding a suspicious tug in Elizabeth River, Virginia.

U. S. FLAGSHIP CUMBERLAND,
Off Fortress Monroe, June 5, 1861.

SIR: Your letter* of the 4th instant has been received.

I beg to state in reply that the tug you allude to has been in the habit of coming to the point every morning for the purpose, I have no doubt, of seeing what is transpiring in the roads, and I am satisfied has had no communication with James River.

The *Yankee* can not prevent it without passing the batteries of Sewell's Point and Craney Island.

Very respectfully, your obedient servant,

G. J. PENDERGRAST,
Flag-Officer, Commanding West India Squadron.

Major-General BUTLER,
Commanding Department of Virginia, Fortress Monroe.

Letter from Flag-Officer Pendergrast, U. S. Navy, commanding West India Squadron, to the judge of the U. S. district court, New York, regarding captured bark General Green.

U. S. FLAGSHIP CUMBERLAND,
Off Fortress Monroe, Va., June 5, 1861.

SIR: I send you herewith the papers relating to the bark *General Green*, of Charleston, S. C., Captain Benjamin Atwell, from Sagua la

* Not found.

[Enclosures.]

U. S. S. QUAKER CITY,
Hampton Roads, June 7, 1861.

SIR: Commander Carr, U. S. Navy, the commanding officer of this vessel, has handed me an extract of a communication to you from the honorable Secretary of the Navy, to the effect that the owners of the *Quaker City* keep that vessel in repair, and the Government is not called upon for any of her expenses.

I have most respectfully to remark, as the agent for the owners of the *Quaker City*, that the question is not one of expenses. It is simply to find a place, materials, and mechanics wherewith to keep her in running order.

It is unnecessary to detail now, after the repeated representations to you, the condition of the vessel and the necessity of repairs.

Be assured, sir, that she will run as long as possible, and I only ask that reasonable opportunities may be afforded to keep her machinery in an efficient state.

Most respectfully, your obedient servant,

THOMAS W. WILSON.

Flag-Officer PENDERGRAST, U. S. Navy,
Commanding U. S. Naval Forces, Hampton Roads.

U. S. S. QUAKER CITY,
Chesapeake Bay, June 5, 1861.

SIR: Having been informed that the charter of the above-named steamer has been renewed by the Government for a period of ninety days, I beg respectfully to inform you that having been originally ordered to prepare the ship for thirty days only, my stock of engine stores and material will soon require replenishing, and although the engine and boilers are still comparatively in order, yet the ordinary wear of over forty days' steaming will shortly necessitate a return to some port where the advantage of a machine shop can be obtained.

Respectfully submitting the foregoing to your consideration, I am, yours, very respectfully,

SOLON FARRER,
Chief Engineer.

Captain O. CARR,
Commanding.

Order of the Secretary of the Navy to Lieutenant Braine, U. S. Navy, commanding U. S. S. Monticello, regarding that vessel.

NAVY DEPARTMENT, *June 10, 1861.*

SIR: As soon as the steamer *Monticello* is prepared for service, you will return with her to Hampton Roads and report to Flag-Officer Stringham, or the senior commanding officer present, for duty.

Commander E. M. Yard has been ordered to command the *Monticello*, and will join her at Hampton Roads.

I am, respectfully, your obedient servant,

GIDEON WELLES.

Lieutenant D. L. BRAINE,
Temporarily in Charge Monticello, Washington.

the insurgent States, with your remarks as to the number and class of vessels requisite for that service, have been duly considered, and so far as circumstances will admit it will be the policy of the Department to carry them into effect.

We have not vessels of the exact description wanted for this service at the present moment, and must therefore avail ourselves of such as we have. It will be a primary object to close the principal ports, and with the remaining vessels (together with such as are passing to and from the depots or on orders) to perform coast-guard service. In this way an interdiction of commercial intercourse with the insurgents will be substantially effected.

It is the intention of the Government to prohibit foreigners from having traffic and making exchanges with those who are in insurrection. There is no place, except at Alexandria, where there is a collection district, with the proper collecting officers, to collect revenue duties or grant clearances, in any of the insurrectionary States.

Foreigners, consequently, should not enter and leave these harbors and traffic with the insurgents, nor must there be intercommunication by sea with them on the part of our own citizens in any of the States while they are resisting the Government and disregarding its laws.

It is possible that some of the lighter craft may in thick weather and at night run the blockade, but your great effort will be to prevent it. For this purpose the suggestion is a good one, that there should be before each of the principal ports one large vessel attended by two others of lighter draft.

The great hazard that must be run will soon cause a general cessation of commercial intercourse, and unremitting vigilance will effectually extinguish it. The *Wabash*, unless you otherwise direct, will be ordered to relieve you, and thus enable you to renew your position at Hampton Roads.

It has been deemed advisable to continue Flag-Officer Pendergrast and the vessels of his squadron, with the exception of the *Macedonian* and *Bainbridge*, on the coast to aid and assist in the blockade, until we can add to your command from other sources.

I am, respectfully, your obedient servant,

GIDEON WELLES.

Flag-Officer S. H. STRINGHAM,
Commanding Atlantic Blockading Squadron.

Letter from the Secretary of the Navy to Flag-Officer Stringham, U. S. Navy, commanding Atlantic Blockading Squadron, transmitting request for use of a Government vessel to release Northern prisoners from jail at Georgetown, S. C.

Confidential.] NAVY DEPARTMENT, *June 5, 1861.*

SIR: I send herewith a copy of a letter addressed to this Department by a gentleman of character and respectable position in society, whose statements I think may be relied on as correct. Whether you can ascertain further particulars, or would be able to afford relief to the parties thus detained for discharging their duty with fidelity, I am unable to advise, but communicate to you the facts in the case.

The difficulty of supplying your squadron with water on this extensive line of coast has suggested itself to the Department as well as

Atlantic blockading vessel, will only do near a coal depot. I herewith forward the oaths of the crew of the *Minnesota*.

Respectfully, your obedient servant,

S. H. STRINGHAM,
Flag-Officer, Atlantic Blockading Squadron.

Hon. GIDEON WELLES.

Letter from the Secretary of the Navy to Flag-Officer Stringham, U. S. Navy, commanding Atlantic Blockading Squadron, transmitting suggestions regarding Smith's Island as a probable point of smuggling operations.

Confidential.] NAVY DEPARTMENT, *June 11, 1861.*

SIR: I enclose herewith a copy of a communication received at this Department bearing the following endorsement, viz:

HEADQUARTERS OF THE ARMY,
Washington, June 11, 1861.

Respectfully referred to the honorable Secretary of the Navy for his information.
By command of Lieutenant-General Scott:

GEO. W. CULLUM,
Lieutenant-Colonel and Aid-de-Camp.

Very respectfully, etc.,

GIDEON WELLES,
Secretary Navy.

Commodore S. H. STRINGHAM,
Commanding Atlantic Blockading Squadron.

[Enclosure.]

WORCESTER, *June 9, 1861.*

HONORED SIR: I take the liberty of suggesting that there may be some piratical work going on, or landing of contraband articles supplying Maryland and Virginia, etc., at Smith's Island, situate north and adjoining the entrance of Capes Charles and Henry, the mouth of the Chesapeake.

The island may be some 8 or so miles long. I am not posted on this, but there are several places of inlet to it between the continent and it, and very few houses on the island. It used to belong to G. W. Parke Custis, and now, I suppose, to Colonel Lee (that was); formerly belonged to General Washington.

Please excuse the liberty I have taken in thus addressing you. A vessel may easily look around occasionally. I only feel desirous to serve the Union, and thus discharge an impression on my mind. I am a resident of Washington and do not sign my name, as I may be much injured if known in this at present, but, if desirable, after a while will make myself known.

With great respect, your humble servant, UNION.

His Excellency W. SCOTT,
Lieutenant-General, U. S. Army.

Order of the Secretary of the Navy to Flag-Officer Pendergrast, U. S. Navy, commanding West India Squadron, regarding U. S. S. Quaker City.

NAVY DEPARTMENT, *June 11, 1861.*

SIR: Your No. 96, dated the 9th inst, has been received. The *Quaker City* has been [can be] sent to New York, when the neces-

Letter from the Secretary of the Navy to Flag-Officer Stringham, U. S. Navy, commanding Atlantic Blockading Squadron, transmitting information regarding the U. S. S. Harriet Lane.

NAVY DEPARTMENT, *June 6, 1861.*

SIR: Herewith enclosed is a copy of a letter addressed to the Secretary of the Treasury by Captain Howard, of the U. S. Revenue Marine, in relation to the armament of the *Harriet Lane.*

The Department would be pleased to have your views on the subject.

I am, respectfully, your obedient servant,

GIDEON WELLES.

Flag-Officer S. H. STRINGHAM,
Commanding Atlantic Blockading Squadron.

[Enclosure.]

TREASURY DEPARTMENT, *June 3, 1861.*

SIR: I have the honor to transmit copy of a letter from Captain William A. Howard, U. S. Revenue Marine, relative to the armament of the *Harriet Lane.*

I would remark that any expenditures made on account of the revenue vessels while serving under the orders of the Navy Department, are by law to be borne by said Department, and therefore it is deemed only necessary to advise you of the inadequacy of the battery of the *Harriet Lane* for her present duties, to have the defect promptly remedied, which is respectfully requested.

I am, very respectfully,

S. P. CHASE,
Secretary of the Treasury.

Hon. GIDEON WELLES,
Secretary of the Navy.

[Subenclosure.]

NEW YORK, *June 1, 1861.*

SIR: The *Harriet Lane* having a prominent position in the blockading squadron, and liable any hour to be brought into action, I consider it my duty, for the safety and honor of our flag, to report to you she is inadequately armed to meet such vessels and batteries she is most likely to engage, and respectfully request she may be withdrawn from the fleet long enough to exchange her battery of three 32-pounder guns and four 24-pounder howitzers for four 9-inch and one rifled 8-inch gun (the latter I have ready for her) and two 24-pounder howitzers. The Navy Department will no doubt be willing to make the desired and necessary change.

I have the honor to be, sir, very respectfully, your obedient servant,

W. A. HOWARD,
Captain, U. S. Revenue Marine.

Hon. S. P. CHASE,
Secretary of Treasury, Washington.

[Endorsement.]

There are at present no 9-inch guns, the last having been just delivered to the War Department; it is not, therefore, possible at this time to comply with Captain Howard's request.

Very respectfully,

A. A. HARWOOD,
Chief of Bureau.

I would state to the Department that the *Harriet Lane* has been an active cruiser here, and that I believe the suggestions of Captain Faunce to be well founded.

I would be pleased to have the instructions of the Department in relation to her.

I have the honor to be, very respectfully, sir, your obedient servant,

G. J. PENDERGRAST,
Flag-Officer, Commanding West India Squadron.

Hon. GIDEON WELLES,
Secretary of the Navy.

[Enclosure.]

U. S. S. HARRIET LANE,
Off Newport News, June 11, 1861.

SIR: I have the honor to state that repairs are absolutely necessary to this vessel and her engines; her boilers also require a thorough overhauling; the ship's provisions will be exhausted by the 30th of this month; that the terms of service of many of my crew and engineer department will expire within ten days, and that the armament of this ship is by no means such as should be provided to render her efficient in the present state of affairs.

In view of these facts, and of the important events that may soon be expected to transpire in this vicinity, I have to request that this ship be ordered to New York for the necessary repairs, alterations, and supplies at as early a day as possible, in order that when called upon for active service in the face of the enemy we may not be so liable to defeat and disgrace, as would be the case in our present condition if again called upon to encounter a determined and well-armed enemy.

I would also respectfully call your attention to the enclosed report of my chief engineer.

I am, very respectfully, your obedient servant,

JOHN FAUNCE,
Commander.

Flag-Officer G. J. PENDERGRAST,
Flagship Cumberland, off Fortress Monroe.

[Subenclosure.]

U. S. S. HARRIET LANE,
Off Newport News, Va., June 5, 1861.

SIR: I have again the honor to call your attention to the condition of the boilers and engines of this vessel. Steam having been kept up on the ship ever since she left the Brooklyn navy yard, in February last, with the exception of three days only, the engines require repacking throughout. Not only do the boilers require some repairs necessary to their strength under pressure of steam, but the valve motion continues much deranged, and the engine frames work badly on account of the corroding away of the holding-down bolts, which has already caused the breaking of the exhaust-pipe connection, thereby destroying the vacuum, and so greatly reducing the power of the engines as to destroy their capacity for quick action. This was unpleasantly the case to-day during the action with the battery on Pig Point, when, for some time, I was under the greatest anxiety lest the engines should lose their action. Situated as we then were, this might have resulted in the los of the ship and serious calamity to all on board.

Letter from Flag-Officer Pendergrast, U. S. Navy, commanding West India Squadron, to Major-General Butler, U. S. Army, commanding Fortress Monroe, regarding transportation of refugees.

U. S. FLAGSHIP CUMBERLAND,
Off Fortress Monroe, June 6, 1861.

SIR: I beg leave to inform you that I have received this day, by a flag of truce, about 200 men, women, and children, which I desire to send North by the first transport leaving here, and would feel obliged to you if you will place one at my disposal when such an opportunity presents itself.

Very respectfully, your obedient servant,

G. J. PENDERGRAST,
Flag-Officer, Commanding West India Squadron.

Major-General BUTLER,
Commanding Forces, Department of Virginia.

Report of Flag-Officer Pendergrast, U. S. Navy, commanding West India Squadron, regarding affairs of his command.

U. S. FLAGSHIP CUMBERLAND,
Off Fortress Monroe, Va., June 7, 1861.

SIR: Your dispatch under date of the 6th instant has been received. As regards the *Yankee*, she can be spared now, as she is useless, and I doubt whether I could get her as far as Philadelphia. With reference to the *Quaker City*, it is absolutely necessary that she should have some repairs made, and I again respectfully call the attention of the Department to my dispatch No. 84, as regards her going to New York. The crew are dissatisfied and anxious to leave, and I would be pleased to have the order of the Department to send her to New York to be repaired by her owners, and that she may receive a new crew, in accordance with her charter. I would be pleased also to have instructions as regards the captured tug *Young America*, referred to in my dispatch No. 84. As she is, she is worthless. I am left at present with only this ship and the *Harriet Lane* in Hampton Roads, and the *Dawn* at the mouth of York River, the only effective vessels here to carry on the blockade, and I am frequently called upon by Major-General Butler for assistance, which it is not in my power to render. I would suggest that two or more small steamers be sent here temporarily, if not for a longer time, particularly a tugboat.

I have the honor to be, sir, very respectfully, your obedient servant,

G. J. PENDERGRAST,
Flag-Officer, Commanding West India Squadron.

Hon. GIDEON WELLES,
Secretary of the Navy, Washington, D. C.

P. S.—I have had an examination made by the chief engineer of the *Quaker City* on the *Yankee*, and the enclosed report shows the result. I would respectfully suggest that the *Keystone State* supply the place of the *Quaker City*, if she can be spared.

G. J. PENDERGRAST.

You will use all possible dispatch in having these suggestions carried out, and lose no time in returning to this place.

Captain Wilson stated in his letter that from four to five days would be necessary, and I shall expect the *Quaker City* here at that time.

You will please give passage to seven invalid seamen belonging to this ship on their way to the New York hospital.

Yery respectfully,

G. J. PENDERGRAST,
Flag-Officer, Commanding West India Squadron.

Commander OVERTON CARR, U. S. Navy,
Commanding Quaker City.

Report of Flag-Officer Pendergrast, U. S. Navy, commanding West India Squadron, regarding the movements of the U. S. steamers Monticello and Quaker City.

U. S. FLAGSHIP CUMBERLAND,
Off Fortress Monroe, Va., June 13, 1861.

SIR: I have the honor to inform the Department that the U. S. S. *Monticello*, Lieutenant Commanding Braine, has arrived here, and that I have this day dispatched the *Quaker City* to New York for the purpose of carrying out the suggestions of Captain Wilson in his letter to me already submitted to the Department in my dispatch No. 96. I would respectfully suggest to the Department that some arrangement be made here with the ordnance factory at Fortress Monroe, so as to enable the small repairs on vessels to be made here, and thereby save the time and expense of sending them North. These suggestions were made after a consultation with Major-General Butler. I would respectfully request that a competent naval engineer, with four machinists and two boiler makers, be sent here for that purpose.

I have the honor to be, very respectfully, sir, your obedient servant,

G. J. PENDERGRAST,
Flag-Officer, Commanding West India Squadron.

Hon. GIDEON WELLES,
Secretary of the Navy.

Letter from the Secretary of the Navy to Flag-Officer Stringham, U. S. Navy, commanding Atlantic Blockading Squadron, regarding the closing of the ports of North Carolina by means of sunken vessels, and transmitting correspondence suggesting the importance of closing the port of Fernandina.

Confidential.] NAVY DEPARTMENT, *June 14, 1861.*

SIR: I send you herewith copies of letters received at this Department from the Assistant Secretary of the Treasury and the collector at Wilmington, Del. The suggestions in regard to Fernandina and the importance of having an armed vessel at that point have been heretofore made by other parties. This is probably the most important port to close up on the eastern coast of Florida. It is also deemed advisable that an armed vessel should, at all events for a period, be stationed

to me, and also reported the capture of a prize on the 1st day of June, which proved to be the schooner *F. W. Johnson*, of Norfolk, Va.; cargo, railroad iron. The said schooner was sent to Baltimore and delivered over to the U. S. district judge. As regards the *Haxall*, I know nothing of her. Flag-Officer Stringham had her in charge. In obedience to your instructions I shall send the *Young America* to Washington for repairs. In relation to the *Quaker City* I would respectfully refer the Department to my dispatch* No. 89. The Baltimore mail boats arrive regularly every day, Sundays excepted. The Department will please pardon my neglect in not informing it of captures made here. Through the press of business here, which is very great, I entirely forgot it. Hereafter all such information will be given to the Department. All vessels captured were sent to a Northern U. S. court, for such action as may be necessary, in charge of trusty persons with letters to the U. S. district judge stating the facts of their capture. I would respectfully request that the Department give me authority to appoint a clerk. An immense deal of writing incidental to a blockade is necessary, and I have no one but my secretary.

I have the honor to be, very respectfully, sir, your obedient servant,

G. J. PENDERGRAST,
Flag-Officer, Commanding West India Squadron.

Hon. GIDEON WELLES,
Secretary of the Navy, Washington, D. C.

Order of the Secretary of the Navy to Flag-Officer Pendergrast, U. S. Navy, commanding West India Squadron, regarding special service to be performed by Lieutenant Crosby, U. S. Navy.

NAVY DEPARTMENT, *June 8, 1861.*

SIR: You will direct Lieutenant Peirce Crosby to report himself to Major-General Butler for such special duty as he may assign him. This order is not intended to detach that officer from the *Cumberland* nor to deprive him of sea pay during his temporary absence, but should the *Cumberland* sail from Hampton Roads before the completion of his service ashore you will issue orders for him to report for duty on board the *Minnesota* or some other vessel of Flag-Officer Stringham's squadron.

I am, respectfully, your obedient servant,

GIDEON WELLES.

Flag-Officer G. J. PENDERGRAST,
Commanding West India Squadron, Fortress Monroe, Va.

Report of Flag-Officer Pendergrast, U. S. Navy, commanding West India Squadron, regarding a paymaster for his command.

U. S. FLAGSHIP CUMBERLAND,
Off Fortress Monroe, Va., June 8, 1861.

SIR: The orders of the Department for Paymaster Thomas R. Ware, enclosed to Major-General Butler, have been by him referred to me.

I beg leave to inform the Department that I know of no opportunity by which I could send them to him.

---

*See p. 691.

Order of the Secretary of the Navy to the senior officer at Hampton Roads, to seize steamer Hurl, supposed to be engaged in illegal traffic.

Confidential.] NAVY DEPARTMENT, *June 14, 1861.*

SIR: It has been reported to this Department that a small steamer, supposed to be the *Hurl*, plying between Baltimore and the Pocomoke River, is laden with articles contraband of war. This steamer must be seized and examined. Smith's Island is reported to be the rendezvous of stores, etc., for the Virginia shore, which will also call for your investigation.

Very respectfully, etc.,

GIDEON WELLES,
Secretary Navy.

SENIOR NAVAL OFFICER,
Hampton Roads, Virginia.

Order of the Secretary of the Navy to Flag-Officer Pendergrast, U. S. Navy, commanding West India Squadron, to furnish information regarding facilities for repairing vessels at Fortress Monroe.

NAVY DEPARTMENT, *June 15, 1861.*

SIR: Your No. 100* has been received, in which you suggest that some arrangement be made with the ordnance factory at Fortress Monroe, so as to enable the small repairs on vessels to be made there, and thus save the time and expense of sending them North.

The Department would like to have more definite information on this subject and to know what arrangement can be made. It has no information of the facilities of the factory for executing such repairs, etc.

I am, respectfully, your obedient servant,

GIDEON WELLES.

Flag-Officer G. J. PENDERGRAST,
Commanding West India Squadron.

Report of Flag-Officer Pendergrast, U. S. Navy, commanding West India Squadron, of the arrival at Fortress Monroe of the U. S. ship Jamestown.

U. S. FLAGSHIP CUMBERLAND,
Off Fortress Monroe, Va., June 15, 1861.

SIR: I have the honor to inform the Department that the U. S. sloop of war *Jamestown*, Commander Charles Green, arrived here last evening.

I have the honor to be, sir, very respectfully, your obedient servant,

G. J. PENDERGRAST,
Flag-Officer, Commanding West India Squadron.

Hon. GIDEON WELLES,
Secretary of the Navy, Washington, D. C.

---

* See p. 719.

I took my departure from the navy yard yesterday afternoon, and night overtaking us, I anchored at the horseshoe inside of Sandy Hook, and a fog setting in prevented our getting underway early this morning. The pilot did not leave us until half past 9, and I shall proceed with all dispatch to carry out the orders of the Department.

I am, sir, respectfully, your obedient servant,

SAM. LOCKWOOD,
Commander.

Hon. GIDEON WELLES,
Secretary of the Navy, Washington, D. C.

Order of the Secretary of the Navy to Commander Yard, U. S. Navy, commanding U. S. S. Dale, to proceed to duty in the Atlantic Blockading Squadron.

NAVY DEPARTMENT, *June 8, 1861.*

SIR: The U. S. sloop of war *Dale*, under your command, is to form a part of the Atlantic Blockading Squadron, Flag-Officer S. H. Stringham. As soon as she is in all respects prepared for sea you will proceed with her to Hampton Roads and report to Flag-Officer Stringham, or the senior commanding officer present, for duty.

A supply of shells for the *Dale* will be sent to Hampton Roads from Washington.

Before sailing transmit to the Department a muster roll of the *Dale* and a separate list of her officers.

I am, respectfully, your obedient servant,

GIDEON WELLES.

Commander E. M. YARD,
Commanding U. S. S. Dale, Portsmouth, N. H.

Order of Flag-Officer Pendergrast, U. S. Navy, commanding West India Squadron, to Sailmaker Bruce, U. S. Navy, to proceed to Washington, with the U. S. S. Young America.

U. S. FLAGSHIP CUMBERLAND,
Off Fortress Monroe, Va., June 8, 1861.

SIR: By direction of the Secretary of the Navy, you will proceed in the steam tug *Young America* to Washington, for the purpose of having her repaired.

On your arrival at Washington, you will report yourself to the commandant of the navy yard and the Secretary of the Navy.

You will use all possible dispatch in having her repaired and return to this place as soon as possible.

Very respectfully,

G. J. PENDERGRAST,
Flag-Officer, Commanding West India Squadron.

DAVID BRUCE,
Sailmaker, U. S. Navy, U. S. Ship Cumberland.

Report of Flag-Officer Pendergrast, U. S. Navy, commanding West India Squadron, regarding U. S. steamers Harriet Lane and Quaker City.

U. S. FLAGSHIP CUMBERLAND,
Off Fortress Monroe, Va., June 16, 1861.

SIR: I have the honor to acknowledge the receipt of the Department's letter under date of the 15th instant directing me to send the *Harriet Lane* [to] New York.

I shall do so as soon as the *Quaker City* returns, as I can not well spare them both at this time.

I have the honor to be, sir, very respectfully, your obedient servant,

G. J. PENDERGRAST,
Flag-Officer, Commanding West India Squadron.

Hon. GIDEON WELLES,
Secretary of the Navy, Washington, D. C.

Order of Flag-Officer Pendergrast, U. S. Navy, commanding West India Squadron, to Commander Green, U. S. Navy, commanding U. S. ship Jamestown.

U. S. FLAGSHIP CUMBERLAND,
Off Fortress Monroe, Va., June 16, 1861.

SIR: You will please move your ship up to the place indicated by me to you during this tide.

Very respectfully,

G. J. PENDERGRAST,
Flag-Officer, Commanding West India Squadron.

Commander CHARLES GREEN,
Commanding Jamestown.

Report of Flag-Officer Pendergrast, U. S. Navy, commanding West India Squadron, regarding prize schooner Arcola.

U. S. FLAGSHIP CUMBERLAND,
Off Fortress Monroe, Va., June 18, 1861.

SIR: I have the honor to inform the Department that I yesterday sent the prize schooner *Arcola*, Captain Lewis, of Norfolk, Va., from Baltimore, bound to New York (cargo, corn and merchandise), to the U. S. court at Baltimore. The said schooner was seized by order of Flag-Officer Stringham on the 22d day of May, and her cargo of corn was landed at Fortress Monroe for the use of the Government, by order of Flag-Officer Stringham. All papers relating to the *Arcola* were sent with her, including a letter to the U. S. district judge, stating the facts of her seizure.

I have the honor to be, very respectfully, sir, your obedient servant,

G. J. PENDERGRAST,
Flag-Officer, Commanding West India Squadron.

Hon. GIDEON WELLES,
Secretary of the Navy, Washington, D. C.

Order of Flag-Officer Pendergrast, U. S. Navy, commanding West India Squadron, to Lieutenant Crosby, U. S. Navy, to report for duty to Major-General Butler, U. S. Army.

U. S. FLAGSHIP CUMBERLAND,
Off Fortress Monroe, Va., June 9, 1861.

SIR: By direction of the Secretary of the Navy, you are hereby ordered to report to Major-General Butler, for such special duty as he may assign you. This order is not intended to detach you from the *Cumberland*, nor to deprive you of sea pay during your absence, but should the *Cumberland* sail before the completion of your services ashore, you will be ordered to some one of the vessels comprising the blockading squadron under Flag-Officer Stringham.

Very respectfully,

G. J. PENDERGRAST,
Flag-Officer, Commanding West India Squadron.

Lieutenant PEIRCE CROSBY, U. S. Navy.

Report of Flag-Officer Pendergrast, U. S. Navy, commanding West India Squadron, regarding orders issued to Lieutenants Selfridge and Crosby.

U. S. FLAGSHIP CUMBERLAND,
Off Fortress Monroe, Va., June 9, 1861.

SIR: I have the honor to inform the Department that I have ordered Lieutenant Selfridge, of this ship, to the command of the *Yankee*, and Lieutenant Crosby having been ordered on special duty, leaves this ship deficient two lieutenants.

I would be pleased if the Department will supply their places.

I have the honor to be, very respectfully, sir, your obedient servant,

G. J. PENDERGRAST,
Flag-Officer, Commanding West India Squadron.

Hon. GIDEON WELLES,
Secretary of the Navy, Washington, D. C.

Report of Flag-Officer Pendergrast, U. S. Navy, commanding West India Squadron, transmitting information regarding steamer Quaker City.

U. S. FLAGSHIP CUMBERLAND,
Off Fortress Monroe, Va., June 9, 1861.

SIR: I have the honor herewith to enclose to you two letters, one from Captain Wilson, agent of the owners of the *Quaker City*, and one from Solon Farrer, chief engineer, upon which was based my letter to the Department for instruction to send her to New York.

The *Quaker City* has been of great service to us here, and has been an active cruiser. Should she break down, I have no vessel to take her place.

I have the honor to be, sir, very respectfully, your obedient servant,

G. J. PENDERGRAST,
Flag-Officer, Commanding West India Squadron.

Hon. GIDEON WELLES,
Secretary of the Navy, Washington, D. C.

you. One who gave his name [as] "George Knickabocker," I ordered to New York in the schooner. I shall send the remainder to New York by the first opportunity unless otherwise ordered by the Department.

Also the captain of the brig *Hallie Jackson*, Captain John Byers, and three of her crew, whom I shall send to New York, unless otherwise directed, to be detained until the orders of the Department are sent releasing them. I will state in reference to this captain that he acted like a secessionist at heart, as he no doubt is, and was prepared with his secession flag and the United States flag. He admitted having hoisted the secession flag in Cuba. I only succeeded in finding it after a long and careful search, it having been hidden away between the casks in the brig's hold.

I enclose a list of officers and crew of privateer *Savannah;* also of the brig *Hallie Jackson*, now on board this ship.

Respectfully, your obedient servant,

S. H. STRINGHAM,
Flag-Officer, Atlantic Blockading Squadron.

Hon. GIDEON WELLES,
Secretary of Navy.

Request of Flag-Officer Stringham, U. S. Navy, commanding Atlantic Blockading Squadron, for an interview with the Department.

U. S. S. MINNESOTA,
Off Fortress Monroe, June 18, 1861.

SIR: I should be pleased to visit Washington for a day, to consult with the Department, if agreeable and not inconsistent with present or immediately prospective orders from the Department.

Respectfully, your obedient servant,

S. H. STRINGHAM,
Flag-Officer, Atlantic Blockading Squadron.

Hon. GIDEON WELLES,
Secretary of the Navy.

Report of Captain Mercer, U. S. Navy, commanding U. S. S. Wabash, regarding movement of United States vessels to and from Charleston, S. C.

U. S. STEAM FRIGATE WABASH,
Off Charleston, June 18, 1861.

SIR: The *Union* arrived at this anchorage this morning at 9 o'clock, and I have dispatched the *Flag* to take her place off Savannah. It will be almost useless to send the *Union* here again. She will be an admirable vessel for the Chesapeake Bay, drawing 10 feet when full. I hope some more efficient vessel will be substituted for her. I am sorry to lose the services of the *Flag* at this important point.

The *Vandalia* arrived here on the 16th instant, and will be of some service to us.

I am, sir, respectfully, your obedient servant,

SAML. MERCER,
Captain.

Flag-Officer S. H. STRINGHAM,
Commanding U. S. Atlantic Blockading Squadron.

Report of Flag-Officer Stringham, U. S. Navy, commanding Atlantic Blockading Squadron, regarding operations of his command and capture of brig Hallie Jackson.

U. S. S. MINNESOTA,
Off Savannah, June 11, 1861.

SIR: I had the honor of addressing you, under date of June 6, advising the Department of the occurences off Charleston up to and including that date, which I forwarded by the prize to the U. S. brig *Perry*, the schooner *Savannah*, in charge of Midshipman R. S. McCook.

On the 6th instant, about 8 p. m., I was much gratified by the arrival of the steamer *Union*, Lieutenant Commanding J. R. Goldsborough, and *Flag*, Lieutenant Commanding Lewis C. Sartori, and on the 7th, about 8 a. m., by the arrival of the frigate *Wabash*, Captain Samuel Mercer.

The same day I ordered the *Union* to proceed to her station off Savannah.

On the 8th instant we discovered a vessel to the south and west of our station. I ordered the *Flag* to see what vessel it was; she reported the *Union*, which vessel had chased a steamer with a vessel in tow. The commander of the *Union* supposed one was a privateer, from the fact of being fired on by the vessel in tow. They escaped, going into Stono.

The *Union* returned to Savannah. I ordered the *Flag* to look carefully after these vessels. Up to the time of my departure nothing was seen of them.

Leaving the *Wabash* and *Flag* off Charleston, I came down to Savannah yesterday. When off St. Helena [S. C.] we boarded a bark standing off the land under easy sail. She proved to be the English bark *Edward*, from Liverpool for Savannah, with salt and coal. The chief mate came on board of us and reported that the captain had been on shore since Wednesday last, going in a boat from shore; that the bark had been twice boarded, June 6 by U. S. brig *Perry*, and 8th June by U. S. S. *Union*, each time warned off and notified of the blockade. Under these circumstances and other statements of suspicious character, I ordered the bark to follow in charge of Lieutenant Bryant.

She followed us to our present anchorage, when I ordered Acting Master Josiah Snow to visit and examine the bark, who reported the cargo of salt as having been evidently moved, which, in connection with the statement of the mate, that a shore steamer, the *Robert Clinch*, having been twice alongside, the absence for so long a time of the captain, etc., raised a strong suspicion in my mind of her having been engaged in an unlawful proceeding. Yet under the circumstances of the absence of the master, and all the ship's papers being out of the possession or control of the mate and he unable to produce any for my examination, I have finally concluded to order this vessel to proceed at once to sea, going to any foreign port or to a port in the United States north of the capes of Virginia.

We also boarded the English schooner *Victoria*, from Havana, bound to New York, and after noting the circumstances on her papers she proceeded on her voyage; and at same time yesterday witnessed the capture by the steamer *Union* of the brig *Hallie Jackson*, owned in Savannah, bound from Matanzas to Savannah with molasses. I have ordered her to New York, under charge of Lieutenant N. C. Bryant.

We are engaged this morning in supplying with coal the *Union*. She uses coal very fast, and carries but little. She is not fit for an

Report of Commander Goldsborough, U. S. Navy, commanding U. S. S. Union, of the capture of the ship Amelia, June 18, 1861.

U. S. STEAMER UNION,
Potomac Flotilla, August 31, 1861.

SIR: In compliance with your instructions of the 22d instant to furnish the Department with a detailed report of the capture of the ship *Amelia* by the *Union* under my command, I have the honor to make the following statement:

On the morning of the 18th of June, being off the harbor of Charleston, a sail was discovered in the offing to windward about 12 miles, standing in shore, and apparently under easy sail. I was directed by Captain Mercer to go in pursuit. Chase was immediately given, and as we approached she changed her course, and stood from us; but seeing that we were gaining upon her, and while in the act of firing a gun, she tacked and stood for us. Upon coming up, she proved to be the ship *Amelia*, from Liverpool, belonging and bound to Charleston, with an assorted contraband cargo. I took possession, and convoyed her to the anchorage, where the *Wabash*, Captain Mercer, lay, and to whom I turned her over. The next day, Captain Mercer sent her with a prize crew to Philadelphia, and directed me to convoy her well into the Gulf Stream, which I did.

I am, very respectfully, your obedient servant,

J. R. GOLDSBOROUGH,
Commander, U. S. Navy.

Hon. GIDEON WELLES,
Secretary of the Navy, Washington, D. C.

Report of Flag-Officer Stringham, U. S. Navy, commanding Atlantic Blockading Squadron, giving names and dates of seizures.

U. S. S. MINNESOTA,
Hampton Roads, June 19, 1861.

SIR: I have the honor to acknowledge receipt of your letter of June 3, 1861.

By reference to a list of the vessels seized, and the time of seizure, I am able to inform the Department that the ship *North Carolina* was seized May 14, 1861, and the schooners *J. H. Etheridge*, *Mary*, *William and John*, *Industry*, *William Henry*, and *Belle Conway* were seized on the 15th May, 1861.

The ship *North Carolina* is owned in Norfolk, Va.

J. H. Etheridge, *Mary*, *William and John*, *Industry*, *William Henry*, and *Belle Conway* were released, vessels and cargo, with exception of the cargo of the *Industry*, which was landed at Fortress Monroe for the use of the Army.

Respectfully, your obedient servant,

S. H. STRINGHAM,
Flag-Officer, Atlantic Blockading Squadron.

Hon. GIDEON WELLES,
Secretary Navy.

arises, and the *Monticello*, which has been ordered to Hampton Roads, can take her place.

Every exertion should be made to expedite the return of the *Quaker City* to her station.

The Department authorizes you to appoint temporarily a clerk, the appointment to continue during the pressure of business at Hampton Roads.

I am, respectfully, your obedient servant,

GIDEON WELLES.

Flag-Officer G. J. PENDERGRAST,
Comdg. West India Squadron, Hampton Roads, Virginia.

Report of Flag-Officer Pendergrast, U. S. Navy, commanding West India Squadron, regarding fresh water.

U. S. FLAGSHIP CUMBERLAND,
Off Fortress Monroe, Va., June 11, 1861.

SIR: I have the honor to inform the Department that I was in error in stating that the Baltimore boats arrived here regularly, Sundays excepted; they arrive every day, including Sunday.

I would also state that they have brought here about 23,000 gallons of water supplied by Mr. Clayton.

I will notify Mr. Clayton of the amount needed for the other ships, so that he can furnish it in time.

I have the honor to be, very respectfully, sir, your obedient servant,

G. J. PENDERGRAST,
Flag-Officer, Commanding West India Squadron.

Hon. GIDEON WELLES,
Secretary of the Navy.

Report of Flag-Officer Pendergrast, U. S. Navy, commanding West India Squadron, of the arrival of the U. S. S. Daylight.

U. S. FLAGSHIP CUMBERLAND,
Off Fortress Monroe, Va., June 11, 1861.

SIR: I have the honor to inform the Department that the U. S. S. *Daylight*, Commander Lockwood, arrived here on the evening of the 9th instant.

I have the honor to be, very respectfully, your obedient servant,

G. J. PENDERGRAST,
Flag-Officer, Commanding West India Squadron.

Hon. GIDEON WELLES,
Secretary of the Navy, Washington, D. C.

Report of Flag-Officer Pendergrast, U. S. Navy, commanding West India Squadron, transmitting reports regarding repairs needed by the U. S. S. Harriet Lane.

U. S. FLAGSHIP CUMBERLAND,
Off Fortress Monroe, Va., June 12, 1861.

SIR: I have the honor herewith to enclose to the Department two letters, one from Captain Faunce and the other from the chief engineer of the U. S. S. *Harriet Lane.*

Letter from Lieutenant Sartori, U. S. Navy, commanding U. S. S. Flag, to the judge of the U. S. district court of Pennsylvania, regarding prize brig Hannah Balch.

U. S. S. FLAG,
Off Charleston Bar, June 20, 1861.

SIR: This will be handed to you by Master A. Kautz, prize master of the brig *Hannah Balch*, bound into the port of Savannah, Ga., captured 12 miles southeast from the light-house off that place on the morning of the 20th June, 1861, by the U. S. S. *Flag*, commanded by and with my authority.

Mr. Kautz has in his possession all the papers found on board the *Hannah Balch*, and is directed to place them in your hands. They are numbered in regular order from 1 to 11, and endorsed by me. Also three sealed letters from on board, and a duplicate of my letter of instructions to him, and a rebel flag found on board the brig. He will give you all the particulars of the capture, as he was the boarding officer.

I remain, respectfully, your obedient servant,

L. C. SARTORI.

Hon. JOHN CADWALADER,
U. S. Judge for the Southern District of Pennsylvania.

Order of Lieutenant Sartori, U. S. Navy, commanding U. S. S. Flag, to Master Kautz, U. S. Navy, to proceed to Philadelphia in charge prize brig Hannah Balch.

U. S. S. FLAG,
Off Charleston, June 20, 1861.

SIR: You will take command of the prize brig *Hannah Balch*, captured 12 miles southeast of the light-house off Savannah on June 20, 1861, by the U. S. S. *Flag*, commanded by and with my authority, and proceed with her to the port of Philadelphia.

On your arrival there you will report to Captain Du Pont or the commanding officer present at the navy yard. As soon after as practicable you will report yourself as the prize master of the *Hannah Balch* to the Hon. John Cadwalader, judge of the U. S. district court for the southern district of Pennsylvania, placing in his hands all the papers connected with the capture, and await his instructions.

The arms and accouterments for yourself and men will be placed in your charge, for which you will give receipt to the gunner of this vessel. After the *Hannah Balch* is placed in possession of the civil authorities you will receive instructions from Captain Du Pont as to the disposition of your men and their arms, and you will proceed to Hampton Roads and report to the senior naval officer there.

You will deliver no papers to the custom-house officers or other persons without authority from the judge of the U. S. district court, and you will remain in charge of the prize until relieved by the said judge.

Let me impress upon your mind the necessity of unceasing watchfulness and vigilance until the vessel is placed in possession of the proper authorities in Philadelphia.

I am, sir, respectfully, your obedient servant,

L. C. SARTORI.

Master A. KAUTZ, U. S. Navy.

Under these peculiar circumstances, and in order that the vessel may retain her reputation for efficiency, I beg leave to submit the necessity of her soon undergoing the necessary repairs.

I am, sir, very respectfully, your obedient servant,

JAMES R. DEZBURGH,
Chief Engineer.

Captain JNO. FAUNCE,
U. S. S. Harriet Lane.

Order of the Secretary of the Navy to Captain Purviance, U. S. Navy, commanding U. S. frigate St. Lawrence, to proceed to duty in the Atlantic Blockading Squadron.

NAVY DEPARTMENT, *June 12, 1861.*

SIR: The U. S. frigate *St. Lawrence*, under your command, is to form a part of the Atlantic Blockading Squadron, Flag-Officer Silas H. Stringham. As soon as she shall be in all respects prepared for sea, you will proceed with her to Hampton Roads and report to Flag-Officer Stringham, or the senior commanding officer present, for duty.

You will transmit to the Department before sailing a muster roll of the crew of the *St. Lawrence* and a separate list of her officers.

I am, respectfully, your obedient servant,

GIDEON WELLES.

Captain HUGH Y. PURVIANCE,
Commanding U. S. Frigate St. Lawrence, Philadelphia.

Order of the Secretary of the Navy to Flag-Officer Pendergrast, U. S. Navy, commanding West India Squadron, regarding the U. S. S. Harriet Lane.

NAVY DEPARTMENT, *June 13, 1861.*

SIR: I have received your No. 99, enclosing the report of Captain Faunce and the engineer of the *Harriet Lane* on the condition of the machinery of that vessel.

You will please direct Captain Faunce to proceed to New York with the *Harriet Lane*, where she will be repaired with all dispatch and then return to her station.

I am, respectfully, your obedient servant,

GIDEON WELLES.

Flag-Officer G. J. PENDERGRAST,
Commanding West India Squadron, Hampton Roads.

Order of Flag-Officer Pendergrast, U. S. Navy, commanding West India Squadron, to Commander Carr, U. S. Navy, commanding chartered steamer Quaker City, to proceed to New York for repairs.

U. S. FLAGSHIP CUMBERLAND,
Off Fortress Monroe, Va., June 13, 1861.

SIR: You will proceed in the chartered steamer *Quaker City* to New York for the purposes set forth in Captain Wilson's letter to me.

day for the purpose of putting the boiler and machinery of this steamer in order as far as I could, but for a subsequent verbal order from you on the 17th, directing me to return to my station in York River and remain there four or five days, or until you could receive a reply from Washington in reference to this steamer. In obedience to which verbal order, we got up (about 15 pounds) steam and anchor and steamed out of Hampton Roads that afternoon, reaching our anchorage in York River (between the buoys) before dark the same evening, where we have been lying ever since, with the fires banked, at 15 to 17 pounds of steam (and without any occurrence of importance save a very slight leak in one of the small flues last night), until this afternoon about 6 o'clock. We then got underway in pursuit of a large fore-and-aft schooner off the mouth of York River and beating down the Chesapeake, which proved to be the *Arctic*, Captain Hicks, from Georgetown, bound to New York. She had already had her papers endorsed by the *Pawnee*.

It was my intention to have returned to York River this evening and to have anchored within 5 or 6 miles of Yorktown, and to-morrow afternoon to have steamed down to Hampton Roads, in obedience to your verbal order of the 17th; but while in the act of boarding the *Arctic*, the Baltimore mail steamer, from Fortress Monroe, approached, and an officer* on board of her informed me that there were orders for me at the Roads, whither I am now proceeding to report, on my arrival, in person, on board your ship.

We are now running with from 12 to 15 pounds of steam, which I think is about as much as it would be safe to carry.

Enclosed is a memorandum of coal, provisions, wood, and water on hand.

I have the honor to be, very respectfully, your obedient

WILLIAM CHANDLER,
Commander, U. S. Navy.

Flag-Officer G. J. PENDERGRAST, U. S. Navy,
Commanding West India Squadron,
Flagship Cumberland, Hampton Roads, Virginia.

Order of Flag-Officer Pendergrast, U. S. Navy, commanding West India Squadron, to Captain Faunce, U. S. Revenue Marine, commanding U. S. S. Harriet Lane, to proceed to New York for repairs to that vessel.

U. S. FLAGSHIP CUMBERLAND,
Off Fortress Monroe, Va., June 22, 1861.

SIR: You will proceed in the U. S. S. *Harriet Lane* to New York for the purpose of having her repaired.

You will use all possible dispatch in having her repaired and return to your station with as little delay as possible.

Before leaving you will order your pilot on board the flagship.

Very respectfully,

G. J. PENDERGRAST,
Flag-Officer, Commanding West India Squadron.

Captain JOHN FAUNCE,
Commanding Steamer Harriet Lane.

---

*This officer (as Commander Chandler afterwards learned) was Flag-Officer Stringham.

off Cape Fear, provided it can be done without weakening other more important points that should be guarded with unremitting vigilance. It is represented that no inconsiderable amount of commerce is carried on at this time from various places in North Carolina, but especially from Cape Fear. In regard to many of the smaller inlets, it has already been intimated that by sinking hulks or captured prizes of little value, communication may be suppressed. Hulks can probably be obtained at Baltimore to enable you to close some of the Southern ports. You will please give this subject consideration, and communicate your views to the Department.

I am, respectfully, etc.,

GIDEON WELLES,
Secretary Navy.

Flag-Officer S. H. STRINGHAM,
Commanding Atlantic Blockading Squadron.

[Enclosure.]

TREASURY DEPARTMENT, *June 6, 1861.*

SIR: The enclosed communication from Mr. Rodney, collector at Wilmington, Del., I deem to be of sufficient importance to demand of me a statement in regard to it.

Fernandina is the Atlantic terminus of the Florida Railroad. Mr. Yulee, formerly of the Senate, has control of the road, and for the purpose of passenger and mail communication with Charleston by the outside route had completed last fall a new steamer, said to be fast. It is to this steamer, undoubtedly, that the letter refers. From Savannah to Key West there is no fort except an old one at [St.] Augustine. Fernandina may be approached by large vessels direct from the sea, and by smaller vessels through the inner passage from Cumberland Sound. What batteries may have been erected this spring I, of course, know not, but I am satisfied that the steamer referred to could with ease be cut out and at the same time the railroad bridge connecting Fernandina with the mainland be destroyed, and the usefulness of that road in a great degree impaired, if not destroyed.

I am, respectfully,

GEO. HARRINGTON.

Hon. S. P. CHASE.

[Subenclosure.]

WILMINGTON, DEL., *June 4, 1861.*

SIR: I have this moment received information which I think the Government should be in possession of.

Captain Brower, of the schooner *Anna Smith*, of Wilmington, Del., reached here this day and reports that his vessel was captured by order of the government of Florida at Cedar Keys, on the 12th day of May last, from whence he made his escape; that the rebels are arming with two heavy guns, and a crew to consist of 160 men, a remarkably fast steamer at the port of Fernandina, eastern Florida, for the purpose of intercepting the California steamers.

Captain Brower is a reliable and intelligent man, and full faith may be given to his report.

With high respect, etc.,

T. M. RODNEY.

Hon. S. P. CHASE,
Secretary Treasury.

Order of the Secretary of the Navy to Commander Prentiss, U. S. Navy, commanding U. S. S. Albatross, to proceed to duty in the Atlantic Blockading Squadron.

NAVY DEPARTMENT, *June 22, 1861.*

SIR: The U. S. S. *Albatross*, under your command, is to form a part of the Atlantic Blockading Squadron, Flag-Officer Silas H. Stringham. As soon, therefore, as she shall be in all respects ready for sea, you will proceed with her to Hampton Roads and report to Flag-Officer Stringham, or the senior commanding officer present, for duty.

Transmit to the Department before sailing a muster roll of the crew and a separate list of the officers of the *Albatross*.

I am, respectfully, your obedient servant,

GIDEON WELLES.

Commander GEO. A. PRENTISS,
Commanding U. S. S. Albatross.

Order of the Secretary of the Navy to Flag-Officer Stringham, U. S. Navy commanding Atlantic Blockading Squadron, transmitting memorandum regarding the yacht Camilla, formerly America.

Confidential.] NAVY DEPARTMENT, *June 22, 1861.*

SIR: Herewith you have a copy of a memorandum furnished the Department this a. m. It is very desirable, if possible, that the vessel referred to should be captured.

Very respectfully, etc.,

GIDEON WELLES,
Secretary Navy.

Flag-Officer S. H. STRINGHAM,
Commanding Atlantic Blockading Squadron.

[Enclosure.]

Memorandum.

JUNE 22, 1861.

From a source entitled to credit I learn that the commander, Decey, of the yacht *Camilla* (formerly *America*), went to Montgomery, and afterwards, about June 1, sailed from Savannah with two ordnance officers (Lieutenant North and Colonel E. C. Anderson) to Europe, to, it is supposed, procure rifled cannon and bring back the commissioners of the Confederate States. It is probable the yacht has gone to Liverpool, as the agent in Savannah is Andrew Low, a branch of the house of Isaac Low & Co., of Liverpool. The yacht is very fast, and will probably attempt to run the blockade, passing into some shallow inlet on the Southern coast with the British flag flying. The *Lady Davis*, carrying one rifled gun, is now in Savannah harbor, trying to get to Charleston through the inland passage, coming out at St. Helena Sound.

The steamers *Everglade* and *St. Mary's*, under new names, are now in Savannah harbor trying to get out. Every telegraph operator takes an oath to the Confederate States, etc., and the telegraphic laws and regulations are very stringent.

Order of Flag-Officer Pendergrast, U. S. Navy, commanding West India Squadron, to Captain Green, U. S. Navy, commanding U. S. ship Jamestown, to prepare that vessel for sea.

U. S. FLAGSHIP CUMBERLAND,
Off Fortress Monroe, Va., June 15, 1861.

SIR: You will prepare your ship for sea in all respects, and have your water, wood, and provisions filled up.

You will inform me when you are ready and await the further orders of Flag-Officer Stringham.

Very respectfully,
G. J. PENDERGRAST,
Flag-Officer, Commanding West India Squadron.

Commander CHAS. GREEN,
Commanding U. S. Ship Jamestown.

Letter from Flag-Officer Pendergrast, U. S. Navy, commanding West India Squadron, to the judge of the U. S. district court, Baltimore, regarding captured schooner Arcola.

U. S. FLAGSHIP CUMBERLAND,
Off Fortress Monroe, Va., June 16, 1861.

SIR: I send you herewith the papers relating to the prize schooner *Arcola*, Captain Lewis, of Norfolk, Va., from Baltimore, bound to New York; cargo, corn and merchandise.

The said schooner was seized by order of Flag-Officer Stringham on the 22d day of May, as belonging to the citizens of a seceded State, at war with the United States.

Her cargo (corn) was ordered to be landed at Fortress Monroe for the use of the Government by Flag-Officer Stringham.

The remaining cargo (merchandise) I have ordered with the vessel to Baltimore in charge of John G. Foster, master's mate of this ship, for such action as may be necessary in such cases.

Very respectfully, your obedient servant,
G. J. PENDERGRAST,
Flag-Officer, Commanding West India Squadron.

U. S. DISTRICT JUDGE,
Baltimore, Md.

Report of Flag-Officer Pendergrast, U. S. Navy, commanding West India Squadron, transmitting reports of commanding officer and engineer of the U. S. S. Dawn, regarding impaired condition of that vessel.

U. S. FLAGSHIP CUMBERLAND,
Off Fortress Monroe, Va., June 16, 1861.

SIR: I have the honor herewith to enclose the reports of Commander Chandler and the engineer of the U. S. S. *Dawn*, from which the Department will learn that she is in a very deplorable condition.

From what I have seen of the vessel she is very inefficient, both in armament and every other respect, and I would respectfully suggest that a more suitable vessel be sent here to take her place.

I have the honor to be, sir, very respectfully, your obedient servant,
G. J. PENDERGRAST,
Flag-Officer, Commanding West India Squadron.

Hon. GIDEON WELLES,
Secretary of the Navy, Washington, D. C.

Captain Faunce will report to you when he is ready to receive them. This will probably be to-morrow morning early.

Very respectfully, your obedient servant,

G. J. PENDERGRAST,
Flag-Officer, Commanding West India Squadron.

Captain G. J. VAN BRUNT,
Commanding U. S. Steam Frigate Minnesota.

P. S.—If you have any sick men, you will please avail yourself of this opportunity to send them to New York.

G. J. PENDERGRAST.

Order of Flag-Officer Pendergrast, U. S. Navy, commanding West India Squadron, to Lieutenant Braine, U. S. Navy, Commanding U. S. S. Monticello, to seize supposed blockade runner Hurl.

Confidential.] U. S. FLAGSHIP CUMBERLAND,
Off Fortress Monroe, Va., June 23, 1861.

SIR: The following is an extract from a communication received from the Department:

It has been reported to this Department that a small steamer, supposed to be the *Hurl*, plying between Baltimore and Pocomoke River, is laden with articles contraband of war. This steamer must be seized and examined.

Smith's Island is represented as the rendezvous of stores, which will also call for your investigation.

In obedience to the above, you will proceed in the *Monticello*, and be governed by the above extract. After having performed this duty you will return to Hampton Roads.

Very respectfully,

G. J. PENDERGRAST,
Flag-Officer, Commanding West India Squadron.

Lieutenant Commanding BRAINE,
Commanding Monticello.

Report of Flag-Officer Pendergrast, U. S. Navy, commanding West India Squadron, regarding orders given to certain vessels of his command.

U. S. FLAGSHIP CUMBERLAND,
Off Fortress Monroe, Va., June 23, 1861.

SIR: I have the honor to inform the Department that the *Quaker City* returned to her station last evening, and that I have this day dispatched the *Harriet Lane* to New York with the crew of the privateer *Savannah*, lately brought here by the U. S. steam frigate *Minnesota* as prisoners. I would also inform the Department that in obedience to its order, under date of the 14th of June, marked confidential, I have directed Lieutenant Commanding Braine, of the U. S. S. *Monticello*, to make an examination of Smith's Island, and also to keep a lookout for the small steamer, supposed to be the *Hurl*, plying between Baltimore and the Pocomoke River.

I have the honor to be, sir, very respectfully, your obedient servant,

G. J. PENDERGRAST,
Flag-Officer, Commanding West India Squadron.

Hon. GIDEON WELLES,
Secretary of the Navy.

caught in a disabled condition, and steamed down the river, burning wood to keep the fires in, until we could reach a place of more security from any attack from a very superior force that a knowledge of our crippled state might provoke. When we had reached the buoys about 10 miles from Yorktown, our fires giving out, we anchored, and as soon as possible patched the leak.

By 7 p. m. we had about 28 pounds of steam up again and fires banked for the night, when about 10 o'clock a leak broke out in another small flue about amidships, compelling us to let off steam and blow the water out of the boiler again preparatory to patching for the fourth time. At daylight this morning we examined and repaired the leak, and got up steam and anchor this afternoon with the intention of steaming down here, lest by remaining longer, even with the fires banked, the flues might give out altogether.

Since writing my report I have been handed a communication by the first assistant engineer in reference to the condition of our boiler and flues, a copy of which is herewith submitted.

Also, accompanying this, a duplicate requisition from the different departments as to our wants, the gunner's being more particularly in answer to your order of the 7th June.

Very respectfully, your obedient servant,

WILLIAM CHANDLER,
Commander, U. S. Navy.

Flag-Officer G. J. PENDERGRAST,
Commanding Home [West India] Squadron.

P. S.—I have also the honor to send a memorandum of the quantity of coal, provisions, wood, and water remaining on hand at this date.

Very respectfully, your obedient servant,

WILLIAM CHANDLER,
Commander, U. S. Navy.

U. S. (CHARTERED) STEAMER DAWN,
June 15, 1861.

SIR: The following is in our opinion a correct statement in regard to the *Dawn's* boiler:

The boiler is 24 feet 8 inches in length, and 10 feet in diameter; has two furnaces 6 feet 6 inches long by 4 feet 3 inches wide; has one 30-inch and one 12-inch flue running forward from each; has thirty 8-inch return flues. The shell of the boiler is three-eighths of an inch thick, and in good order. The 30-inch flues have never leaked any. The 8-inch flues are in a very bad condition; the iron is not more than one thirty-second of an inch thick in many places, varying from that to one-eighth of an inch. They can not be patched so as to make them safe, and they are likely to give out at any time, even with a pressure of 25 pounds to the square inch. The furnaces are worn considerably, but have not given us any trouble since we left New York.

A. W. REYNOLDS,
First Engineer.
L. BURHANS,
Second Engineer.
SAML. TOMLINSON,
Third Engineer.

Captain WM. CHANDLER,
Commander.

Report of Flag-Officer Stringham, U. S. Navy, commanding Atlantic Blockading Squadron, transmitting report of Master's Mate Brown, U. S. Navy, U. S. S. Monticello.

U. S. S. MINNESOTA,
Hampton Roads, June 30, 1861.

SIR: I have the honor to acknowledge receipt of your letter of June 28. I enclose the report of L. A. Brown, master's mate, U. S. S. *Monticello*, omitted in my letter No. 31.

The *Penguin* arrived yesterday. I have ordered her up off York River.

Respectfully, your obedient servant,

S. H. STRINGHAM,
Flag-Officer, Atlantic Blockading Squadron.

Hon. GIDEON WELLES,
Secretary of Navy.

[Enclosure.]

U. S. S. MONTICELLO,
Off the Rappahannock River, June 24, 1861—8 p. m.

SIR: Agreeably to your orders of this date I armed and equipped the launch with eighteen men and took the gig in tow.

We pulled toward the shore until the water became too shallow to allow the launch to proceed any farther, when, leaving the howitzer's crew with four other men in the launch, I took the balance with Dr. Smith and Mr. Phillips, the pilot, in the gig and pulled on shore. Dr. Smith and the pilot went first and were cordially shaking hands with the owner of the house as I and my men, armed with revolvers and Sharps rifles, came up. I heard a man on the stoop say that there was a company of well-drilled volunteers in the vicinity, and on my turning about I saw a company of armed and uniformed men stealing along the shore as if to cut off our retreat. I immediately ordered a retreat to the boat and fired off our carbines, many of which missed fire and then shoved off, having waded to the launch. As the retreating tide had left the gig high and dry on the beach, I had to leave it there. Dr. Smith, surgeon, and August Peterson, quartermaster, were wounded while wading to the launch. I immediately commenced firing the howitzer and did considerable execution and had fired a number of times when I was called back to the ship by your hail. Many of the shot struck the oars and launch, penetrating the side. The men acted nobly while under this galling fire, we being not more than 70 yards from the shore, and they deserve great credit.

I am, respectfully, your obedient servant,

L. A. BROWN,
Master's Mate, U. S. S. Monticello.

D. L. BRAINE, U. S. Navy,
Lieutenant, in Charge U. S. S. Monticello.

Report of Lieutenant Braine, U. S. Navy, commanding U. S. S. Monticello, announcing the death of Quartermaster Peterson of that vessel.

U. S. S. MONTICELLO,
Hampton Roads, June 26, 1861.

SIR: It is my painful duty to announce to you that August Peterson, quartermaster on board this ship, died at the hospital in Fortress

[Endorsement.]

This vessel, *Arcola*, was owned in Norfolk, Va.
Respectfully forwarded.

S. H. STRINGHAM,
Flag-Officer, Atlantic Blockading Squadron.

Report of Flag-Officer Stringham, U. S. Navy, commanding Atlantic Blockading Squadron, of cruise from June 11 to 18, and referring to prize vessels Savannah and Hallie Jackson.

U. S. S. MINNESOTA,
Hampton Roads, June 18, 1861.

SIR: I have the honor to acknowledge receipt of your favor of May 24, instructing me to furnish duplicate instructions to prize masters, so that one copy may be deposited with the clerk of the district court to which the prize may be sent.

Also yours of same date apprising me that the steamer *Flag*, Lieutenant Commanding Lewis C. Sartori, will form part of the Atlantic Blockading Squadron. I have informed you of her arrival off Charleston, June 6, in company with the *Union*, and I am now prepared to say that I find her a very useful vessel, having excellent capacity for coal, which will obviate the necessity of leaving her station except at long intervals. She is off Charleston in company with the *Wabash*.

Also yours of May 27, apprising me of the recharter of the *Quaker City*, and that she will form part of the Atlantic Blockading Squadron.

Also of same date with reference to allowance for pilots when they mess in the wardroom. I acknowledge receipt of your last esteemed favor under date of May 28, 1861, which reached me also off Charleston, with the arrival of the *Wabash*, *Flag*, and *Union*. I availed myself of the presence of the two former at Charleston to go off Savannah. With my proceedings there, I have already made the Department acquainted by letter June 11. I returned off Charleston June 12, where I remained until 15th, when I left for Hampton Roads, where I arrived on the 18th instant.

Nothing of consequence occurred at Charleston previous to my leaving, except an official visit from the English consul, Robert Bunch, esq., in company with Henry Thompson, master of the British bark *Edward*, feeling relieved to find his bark had not gone to New York in charge of a prize master. The consul [was] satisfied when the circumstances were explained upon which I acted. By consent of the consul, Mr. Chatard went with him to Charleston, whither he was proceeding, via Savannah, in the brig *Hallie Jackson*, when she was captured by the U. S. S. *Union*.

Mr. C. is a planter of Cuba, having frequent intercourse with the United States. His wife and one daughter are now in Charleston, and another married and settled in Boston.

I could not refuse to comply with his request to be taken on board this ship instead of being sent forward by the *Jackson*. I hope this will not meet the disapproval of the Department.

We arrived off Fortress Monroe and anchored about noon to-day, after a short passage from Charleston, without any incident of importance.

There are on board this ship thirteen persons, including the captain of the schooner *Savannah*, of whose capture I have already apprised

were engaged in it the following particulars, which you may regard as reliable:

About 4 p. m. on Monday, the 24th, a war steamer, the *Star* [*Monticello*], of New York, of 1,000 tons burden, came to, opposite the house of Mr. James W. Gresham, of Lancaster, situated immediately on the river, about 12 miles below Urbana, on the Lancaster side. She dispatched to the shore three barges, one a very large one, with a swivel in the bow, and two smaller ones, all filled with armed troops. The large barge grounded on the flats. The other two came ashore with a number of armed men, variously estimated at between thirty and sixty. After reaching the shore some six or eight proceeded up to Mr. Gresham's house. One of the party accosted Mr. Gresham and introduced another of the party. The first named, it seems, was the pilot, who was captain of a wood vessel, and acquainted with Gresham. He enquired if he had any chickens or lambs for sale. Mr. Gresham replied that he had a plenty, but not a d—d one for that party. He then took the pilot aside and told him they had better be getting away, as there were troops in the neighborhood, and that he did not wish his premises to be the scene of a battle, as his mother was very ill in the house. While they were talking a small company of Lancaster troops, about thirty in number, were seen coming down the road in double-quick time. The alarm was given, and the enemy fled precipitately to their boats, our men firing into them as they shoved off. In their flight they left one of the barges. The men, in great confusion, crowded into the other, and others wading out to the large barge on the flats. In their flight they left, besides the barge, two breech-loading rifles, a revolver, and several swords, with coats, hats, and shoes, thrown away in their hasty retreat. It is confidently asserted that four of the enemy were killed in the boat. Nobody hurt on our side. As soon as our men fired on the enemy the ship opened her guns on Mr. Gresham's house. She fired fifty-three shot and shell, seventeen of which took effect, damaging the house to the amount of at least $1,000. As in all of our engagements, the preservation of life was most remarkable. One of the balls struck the bed on which Mrs. Gresham was lying ill. She was then removed to an outhouse and a bombshell came in and exploded in the room without injury to anyone.

I have given you in a very hurried manner these particulars, which I gather from most reliable sources of information. You will unite with us in contemptuous indignation at the cowardly conduct of these dastardly scoundrels, who, refusing to meet half their number face to face, at a safe distance, in their ship, destroy the property of our citizens.

I hope to be able to visit your camp soon and renew the acquaintance I had the pleasure of having with you last winter.

Hastily and truly, yours,

JOS. CHRISTIAN.

Colonel CHARLES A. CRUMP,
Gloucester Point, Va.

Report of Flag-Officer Pendergrast, U. S. Navy, commanding West India Squadron, of the arrival in Hampton Roads of the U. S. S. Union, bringing as prisoners the crew of the prize ship Amelia.

U. S. FLAGSHIP CUMBERLAND,
Off Fortress Monroe, Va., June 24, 1861.

SIR: I have the honor to inform the Department that the U. S. S. *Union*, Commander Goldsborough, arrived here last evening. The

Order of the Secretary of the Navy to Flag-Officer Pendergrast, U. S. Navy, commanding West India Squadron, regarding repairs to U. S. S. Dawn.

NAVY DEPARTMENT, *June 18, 1861.*

SIR: Send the steamer *Dawn* to Baltimore for repairs, directing the commanding officer to report his arrival there to the Department by telegraph.

An engineer will be sent to Baltimore by the Department to superintend the repairs of the *Dawn*.

I am, respectfully, your obedient servant,

GIDEON WELLES.

Flag-Officer G. J. PENDERGRAST,
Commanding West India Squadron, Hampton Roads.

Report of Captain Mercer, U. S. Navy, commanding U. S. S. Wabash, of the capture of the ship Amelia, June 18, 1861.

U. S. STEAM FRIGATE WABASH,
Off Charleston, June 19, 1861.

SIR: Yesterday the *Union* arrived here about 9 in the morning. Soon after her arrival, I ordered her to board a vessel which made her appearance to the northward, wind then at northeast. She proved to be a vessel belonging to Charleston, from Liverpool, under American colors. As she was bound into Charleston we captured her, and I had a prize crew placed on board, and gave her in charge of Acting Master John W. Bentley, with orders to proceed with her to Philadelphia. She will take her departure to-day.

The *Flag* went to Savannah yesterday, to relieve the *Union* off that port.

I have given Captain Goldsborough orders to report to the senior naval officer at Hampton Roads. I shall feel the loss of the *Flag* at this point very much. Indeed, with this large ship, which can not approach the shore nearer with safety than 3 miles, and the *Vandalia*, a sailing vessel, I fear that the blockade will not be as effectual as it has been. It is to be hoped that an efficient steamer or two may be sent down to us very soon—vessels that will carry plenty of coal. The vessel captured is the *Amelia*, of Charleston. She came very near getting in, and would have done so if the pilots of Charleston had kept a bright lookout. The captain of the *Amelia* says there are several American vessels bound to Charleston under English colors, so I beg of you to lose no time in sending us down a steamer or two.

I am, sir, respectfully, your obedient servant,

SAML. MERCER,
Captain.

Flag-Officer S. H. STRINGHAM,
Comdg. U. S. Atlantic Blockading Squadron, Flagship Minnesota.

P. S.—This ship, the *Vandalia*, and the *Flag* were present and in sight when the *Union* captured the *Amelia*, and all equally entitled to prize money if she should be condemned.

S. MERCER,
Captain.

Report of Commander Goldsborough, U. S. Navy, commanding U. S. S. Union, of the capture of the ship Amelia, June 18, 1861.

U. S. STEAMER UNION,
Potomac Flotilla, August 31, 1861.

SIR: In compliance with your instructions of the 22d instant to furnish the Department with a detailed report of the capture of the ship *Amelia* by the *Union* under my command, I have the honor to make the following statement:

On the morning of the 18th of June, being off the harbor of Charleston, a sail was discovered in the offing to windward about 12 miles, standing in shore, and apparently under easy sail. I was directed by Captain Mercer to go in pursuit. Chase was immediately given, and as we approached she changed her course, and stood from us; but seeing that we were gaining upon her, and while in the act of firing a gun, she tacked and stood for us. Upon coming up, she proved to be the ship *Amelia*, from Liverpool, belonging and bound to Charleston, with an assorted contraband cargo. I took possession, and convoyed her to the anchorage, where the *Wabash*, Captain Mercer, lay, and to whom I turned her over. The next day, Captain Mercer sent her with a prize crew to Philadelphia, and directed me to convoy her well into the Gulf Stream, which I did.

I am, very respectfully, your obedient servant,

J. R. GOLDSBOROUGH,
Commander, U. S. Navy.

Hon. GIDEON WELLES,
Secretary of the Navy, Washington, D. C.

Report of Flag-Officer Stringham, U. S. Navy, commanding Atlantic Blockading Squadron, giving names and dates of seizures.

U. S. S. MINNESOTA,
Hampton Roads, June 19, 1861.

SIR: I have the honor to acknowledge receipt of your letter of June 3, 1861.

By reference to a list of the vessels seized, and the time of seizure, I am able to inform the Department that the ship *North Carolina* was seized May 14, 1861, and the schooners *J. H. Etheridge*, *Mary*, *William and John*, *Industry*, *William Henry*, and *Belle Conway* were seized on the 15th May, 1861.

The ship *North Carolina* is owned in Norfolk, Va.

J. H. Etheridge, *Mary*, *William and John*, *Industry*, *William Henry*, and *Belle Conway* were released, vessels and cargo, with exception of the cargo of the *Industry*, which was landed at Fortress Monroe for the use of the Army.

Respectfully, your obedient servant,

S. H. STRINGHAM,
Flag-Officer, Atlantic Blockading Squadron.

Hon. GIDEON WELLES,
Secretary Navy.

Report of Flag-Officer Stringham, U. S. Navy, commanding Atlantic Blockading Squadron, acknowledging receipt of dispatches.

U. S. S. MINNESOTA,
Hampton Roads, June 19, 1861.

SIR: I have the honor to acknowledge receipt of your letter of June 4, in reference to W. T. B. Van Orden, jr.; also of date June 6, apprising me of his safety.

I have received appointments, with oaths enclosed, for Acting Masters John E. Rockwell, John W. Bentley, Jos. R. Gordon, Thomas H. Gifford, James B. Gordon, John MacDiarmid, and H. W. Green. I venture to return the appointment of Mr. Green, having sent him to New York by the brig *Hallie Jackson* with a letter to Commodore S. L. Breese. His conduct was such on board this ship (he having been reported to me by Captain Van Brunt as intoxicated twice within four or five days) that I recommended Commodore B[reese] to let him go, as being of little service.

I have also received your letter of June 5, in which I am informed "it is the intention of the Government to prohibit foreigners from having traffic and making exchanges with those who are in insurrection." I will here only say in reference to my action since taking command that I have looked upon the seceding and blockaded States as enemies and have treated them as such.

I am also in receipt of your letters, "confidential," of dates June 5, containing a letter from F. A. Drake, dated Guilford County, June 2; June 11, containing anonymous communication from "Union," dated Worcester, 9th June, to General Scott (I shall send a steamer as soon as possible to examine Smith's Island), and June 14, containing communications from T. M. Rodney, June 4, Wilmington, Del., and George Harrington, Treasury Department, June 6.

Respectfully, yours, obediently,

S H. STRINGHAM,
Flag-Officer, Atlantic Blockading Squadron.

Hon. GIDEON WELLES,
Secretary Navy.

Letter from Flag-Officer Pendergrast, U. S. Navy, commanding West India Squadron, to Major-General Butler, U. S. Army, commanding Department of Virginia, transferring escaped slaves.

U. S. FLAGSHIP CUMBERLAND,
Off Fortress Monroe, Va., June 19, 1861.

SIR: I send you two slave men, the property of Mr. Selden, of Gloucester County, Va., picked up in an open canoe last Sunday morning by a schooner which arrived here.

The said canoe was capsized during the severe storm, and they were found clinging to it by the schooner.

I would be glad if you will receive them.

Very respectfully, your obedient servant,

G. J. PENDERGRAST,
Flag-Officer, Commanding West India Squadron.

Major-General BENJAMIN BUTLER,
Commanding Department of Virginia, Fortress Monroe.

Letter from Lieutenant Sartori, U. S. Navy, commanding U. S. S. Flag, to the judge of the U. S. district court of Pennsylvania, regarding prize brig Hannah Balch.

U. S. S. FLAG,
Off Charleston Bar, June 20, 1861.

SIR: This will be handed to you by Master A. Kautz, prize master of the brig *Hannah Balch*, bound into the port of Savannah, Ga., captured 12 miles southeast from the light-house off that place on the morning of the 20th June, 1861, by the U. S. S. *Flag*, commanded by and with my authority.

Mr. Kautz has in his possession all the papers found on board the *Hannah Balch*, and is directed to place them in your hands. They are numbered in regular order from 1 to 11, and endorsed by me. Also three sealed letters from on board, and a duplicate of my letter of instructions to him, and a rebel flag found on board the brig. He will give you all the particulars of the capture, as he was the boarding officer.

I remain, respectfully, your obedient servant,

L. C. SARTORI.

Hon. JOHN CADWALADER,
U. S. Judge for the Southern District of Pennsylvania.

Order of Lieutenant Sartori, U. S. Navy, commanding U. S. S. Flag, to Master Kautz, U. S. Navy, to proceed to Philadelphia in charge prize brig Hannah Balch.

U. S. S. FLAG,
Off Charleston, June 20, 1861.

SIR: You will take command of the prize brig *Hannah Balch*, captured 12 miles southeast of the light-house off Savannah on June 20, 1861, by the U. S. S. *Flag*, commanded by and with my authority, and proceed with her to the port of Philadelphia.

On your arrival there you will report to Captain Du Pont or the commanding officer present at the navy yard. As soon after as practicable you will report yourself as the prize master of the *Hannah Balch* to the Hon. John Cadwalader, judge of the U. S. district court for the southern district of Pennsylvania, placing in his hands all the papers connected with the capture, and await his instructions.

The arms and accouterments for yourself and men will be placed in your charge, for which you will give receipt to the gunner of this vessel. After the *Hannah Balch* is placed in possession of the civil authorities you will receive instructions from Captain Du Pont as to the disposition of your men and their arms, and you will proceed to Hampton Roads and report to the senior naval officer there.

You will deliver no papers to the custom-house officers or other persons without authority from the judge of the U. S. district court, and you will remain in charge of the prize until relieved by the said judge.

Let me impress upon your mind the necessity of unceasing watchfulness and vigilance until the vessel is placed in possession of the proper authorities in Philadelphia.

I am, sir, respectfully, your obedient servant,

L. C. SARTORI.

Master A. KAUTZ, U. S. Navy.

Letter from Flag-Officer Stringham, U. S. Navy, commanding Atlantic Blockading Squadron, to the Secretary of the Navy enquiring into Department's action regarding discharge of seized vessels.

U. S. S. MINNESOTA,
Hampton Roads, June 20, 1861.

SIR: On my arrival at this point I had the honor of receiving letters from the Department, which I have acknowledged in my communications of 18th and 19th instant.

I venture to defer the subjects of your confidential communications until I receive answer to an application for a day's personal visit to Washington, which I ventured to make by letter of June 18.

The remaining important subjects of consideration are contained in your letter of June 5, in which you honor me with the remark that the suggestions in your (my) dispatch No. 23, in reference to the interdiction of communication in the insurgent States "meets the approval of the Department, and it will be the policy of the Government to carry them into effect," and that "it is the intention of the Government to prohibit foreigners from having traffic and making exchanges with those who are in insurrection."

I confess that I am at great loss to understand and wholly unable to explain how I can have made such a gross mistake as appears to have been made by me, if I am correctly informed (though I confess yet unofficially), that most, if not all, the vessels seized by me and being from secession ports and owned in rebellious States, yet have been permitted to go free.

I could not look upon the vessels with secession State clearances, some with secession flags in their possession, which I know they have proudly and defiantly displayed (with the old flag of our country in their hands only to be used for deception and fraud), as deserving of any more consideration than any other enemy of my Government.

While I have uniformly treated neutrals with the utmost forbearance, giving them every aid and comfort in my power consistent with duty, I have not hesitated to do what I thought was also my duty toward traitors and rebels, and shall continue to use the force granted me by the Department to confound these last whenever and wherever I can.

I should be pleased to hear, if not an inconsistent request, the grounds upon which vessels have been discharged, that I may avoid in the future committing like errors. I enclose for the Department a correct copy of the document* taken from the *Savannah*, and under which she sailed; the original went forward with the prize master, to be delivered to the district judge U. S. court.

Respectfully, your obedient servant.

S. H. STRINGHAM,
Flag-Officer, Atlantic Blockading Squadron.

Hon. GIDEON WELLES,
Secretary of Navy.

Report of Commander Chandler, U. S. Navy, commanding U. S. S. Dawn, regarding the movements of that vessel.

U. S. S. DAWN,
Chesapeake Bay, June 21, 1861—9 p. m.

SIR: I should have acknowledged in writing the receipt of your order dated the 16th instant, directing me to avail myself of the following

* See pp. 692, 693.

day for the purpose of putting the boiler and machinery of this steamer in order as far as I could, but for a subsequent verbal order from you on the 17th, directing me to return to my station in York River and remain there four or five days, or until you could receive a reply from Washington in reference to this steamer. In obedience to which verbal order, we got up (about 15 pounds) steam and anchor and steamed out of Hampton Roads that afternoon, reaching our anchorage in York River (between the buoys) before dark the same evening, where we have been lying ever since, with the fires banked, at 15 to 17 pounds of steam (and without any occurrence of importance save a very slight leak in one of the small flues last night), until this afternoon about 6 o'clock. We then got underway in pursuit of a large fore-and-aft schooner off the mouth of York River and beating down the Chesapeake, which proved to be the *Arctic*, Captain Hicks, from Georgetown, bound to New York. She had already had her papers endorsed by the *Pawnee*.

It was my intention to have returned to York River this evening and to have anchored within 5 or 6 miles of Yorktown, and to-morrow afternoon to have steamed down to Hampton Roads, in obedience to your verbal order of the 17th; but while in the act of boarding the *Arctic*, the Baltimore mail steamer, from Fortress Monroe, approached, and an officer* on board of her informed me that there were orders for me at the Roads, whither I am now proceeding to report, on my arrival, in person, on board your ship.

We are now running with from 12 to 15 pounds of steam, which I think is about as much as it would be safe to carry.

Enclosed is a memorandum of coal, provisions, wood, and water on hand.

I have the honor to be, very respectfully, your obedient

WILLIAM CHANDLER,
Commander, U. S. Navy.

Flag-Officer G. J. PENDERGRAST, U. S. Navy,
Commanding West India Squadron,
Flagship Cumberland, Hampton Roads, Virginia.

Order of Flag-Officer Pendergrast, U. S. Navy, commanding West India Squadron, to Captain Faunce, U. S. Revenue Marine, commanding U. S. S. Harriet Lane, to proceed to New York for repairs to that vessel.

U. S. FLAGSHIP CUMBERLAND,
Off Fortress Monroe, Va., June 22, 1861.

SIR: You will proceed in the U. S. S. *Harriet Lane* to New York for the purpose of having her repaired.

You will use all possible dispatch in having her repaired and return to your station with as little delay as possible.

Before leaving you will order your pilot on board the flagship.

Very respectfully,

G. J. PENDERGRAST,
Flag-Officer, Commanding West India Squadron.

Captain JOHN FAUNCE,
Commanding Steamer Harriet Lane.

---

*This officer (as Commander Chandler afterwards learned) was Flag-Officer Stringham.

Report of Flag-Officer Pendergrast, U. S. Navy, commanding West India Squadron, of arrival in Hampton Roads of the U. S. S. Mount Vernon.

U. S. FLAGSHIP CUMBERLAND,
Off Fortress Monroe, Va., June 22, 1861.

SIR: I have the honor to inform the Department that the U. S. S. *Mount Vernon*, Commander Oliver S. Glisson, arrived here this forenoon, four days from Key West.

I have the honor to be, sir, very respectfully, your obedient servant,

G. J. PENDERGRAST,
Flag-Officer, Commanding West India Squadron.

Hon. GIDEON WELLES,
Secretary of the Navy, Washington, D. C.

Order of the Secretary of the Navy to Captain Hull, U. S. Navy, commanding U. S. ship Savannah, to proceed to duty in the Atlantic Blockading Squadron.

NAVY DEPARTMENT, *June 22, 1861.*

SIR: The U. S. sloop of war *Savannah*, under your command, is to form a part of the Atlantic Blockading Squadron, Flag-Officer Silas H. Stringham. As soon, therefore, as she shall be in all respects prepared for sea, you will proceed with her to Hampton Roads and report to Flag-Officer Stringham, or the senior commanding officer present, for duty.

You will transmit to the Department before sailing a complete muster roll of the crew of the *Savannah* and a separate list of her officers.

I am, respectfully, your obedient servant,

GIDEON WELLES.

Captain JOS. B. HULL,
Commanding U. S. Ship Savannah, New York.

Order of the Secretary of the Navy to Commander Livingston, U. S. Navy, commanding U. S. S. Penguin, to proceed to duty in the Atlantic Blockading Squadron.

NAVY DEPARTMENT, *June 22, 1861.*

SIR: The U. S. S. *Penguin*, under your command, is to form a part of the Atlantic Blockading Squadron, Flag-Officer Silas H. Stringham. As soon, therefore, as she shall be in all respects ready for sea, you will proceed with her to Hampton Roads and report to Flag-Officer Stringham, or the senior commanding officer present, for duty. Transmit to the Department before sailing a muster roll of the crew and a separate list of the officers of the *Penguin*.

I am, respectfully, your obedient servant,

GIDEON WELLES.

Commander J. W. LIVINGSTON,
Commanding U. S. S. Penguin.

On the 29th ultimo I was granted a parole of fifty days for the purpose of effecting an exchange. I pledged myself to return to Richmond a prisoner, if I failed to get an exchange. I also pledged myself to call upon the President, and urge an exchange of prisoners now held in Richmond for those held by the U. S. Government.

Patriotic motives and a sympathy for the unfortunate prisoners in Richmond induced me to act as I did. I need scarcely say that I was exceedingly anxious to secure my own liberty.

Trusting that the Department will sustain me in my action, and hoping soon to be able to take service,

I am, sir, very respectfully, your obedient servant,

ALBERT KAUTZ,
Lieutenant, U. S. Navy.

Hon. GIDEON WELLES,
Secretary of the Navy.

Letter from the Secretary of the Navy to Flag-Officer Stringham, U. S. Navy, commanding Atlantic Blockading Squadron, regarding transfer of cannon from War Department.

NAVY DEPARTMENT,
Washington, June 25, 1861.

SIR: In accordance with your suggestion, instructions will be issued by the War Office, subject to the approval of Major-General Butler, to transfer to your charge one of the large pieces of ordnance known as the Rodman cannon, together with its equipment and ammunition, for service afloat in the waters adjacent to Old Point Comfort.

As the rifled cannon now lying near Fortress Monroe has not been yet fully tested, and as considerable time would elapse before a trial could be made and the projectiles prepared, the Department would in consequence recommend you to take the shell gun of 15 inches' bore, which is already proved, mounted on its carriage, and supplied with a sufficiency of shells for present service.

In the book of Rodman on experiments with cannon and powder (forwarded to you by this mail), at page 290, you will find all requisite information relative to the weights of charge and shell, elevation, range, and recoil for the XV-inch gun, by which you will perceive that, with an elevation of 25 degrees, a charge of 50 pounds, and a shell of 315 pounds, the range obtained was 4,686 yards.

It may be well to remark that the bore is not chambered, and the ordinary form of cartridge bag will answer for the charge.

For the purpose of preparing the gun for active operations afloat you will, with all practicable dispatch, cause to be purchased a suitable vessel to sustain its weight of 49,099 pounds, exclusive of carriage and equipment, and fit the vessel in such a manner as your experience may dictate.

Should, however, difficulties arise with respect to the price of the vessel, by notifying this Department the matter will be promptly attended to.

When the vessel and gun are fully prepared for service you will be guided by such circumstances in the operations as the pending hostilities may demand.

I am, very respectfully,

GIDEON WELLES.

Senior Flag-Officer SILAS H. STRINGHAM, U. S. Navy,
Commanding Atlantic Blockading Squadron, Hampton Roads.

Order of the Secretary of the Navy to Captain Nicholson, U. S. Navy, commanding U. S. S. Roanoke, to proceed to duty in the West India Squadron.

NAVY DEPARTMENT, *June 22, 1861.*

SIR: As soon as the U. S. steam frigate *Roanoke*, under your command, is ready for sea, you will proceed with her to Hampton Roads, Virginia, and report to Flag-Officer G. J. Pendergrast, commanding the West India Squadron.

Transmit to the Department before sailing a muster roll of the *Roanoke* and a separate list of her officers.

I am, respectfully, your obedient servant,

GIDEON WELLES.

Captain WM. C. NICHOLSON,
Commanding U. S. Frigate Roanoke, New York.

Report of Commander Chandler, U. S. Navy, commanding U. S. S. Dawn, regarding condition of that vessel.

U. S. S. DAWN,
Baltimore, Md., June 23, 1861—noon.

SIR: I have the honor to report our arrival here at noon to-day (already announced to you by telegraph, in obedience to an order from Flag-Officer Stringham, of 19th instant), in twenty-five hours from Fortress Monroe, under from 12 to 15 pounds of steam (our usual steaming pressure being about 35 pounds and maximum allowed 45 pounds), aided by the flood tide about 2 knots per hour.

We have not a man on the sick list, and the steamer is in an efficient condition for service (except the boiler flues), as far as her battery of two (broadside) 32-pounders, etc., can make her.

Enclosed with this is a copy of the first assistant engineer's report to me of the 17th instant, and a copy of my last report to the flag-officer in Hampton Roads, together with a complete muster roll of the officers and crew (including the engine department) of the *Dawn*; also a memorandum of the quantity of powder, shot, 12-pound howitzer canister, and equipments for our two long 32-pounders; of the number of musketoons, common ship's pistols, and swords, as well as of the small-arm ammunition; of the coal, provisons, wood and water, and of the general ship's stores of the different departments on hand.

There is so much motion in the vessel I must apologize for my unsteady writing, and have the honor to be,

Very respectfully, your obedient servant,

WILLIAM CHANDLER,
Commander, U. S. Navy.

Hon. GIDEON WELLES,
Secretary of the Navy.

Order of Flag-Officer Pendergrast, U. S. Navy, commanding West India Squadron, to Captain Van Brunt, U. S. Navy, commanding U. S. S. Minnesota, to transfer prisoners for passage to New York.

U. S. FLAGSHIP CUMBERLAND,
Off Fortress Monroe, Va., June 23, 1861.

SIR: You will please transfer the prisoners on board the *Minnesota* to the U. S. S. *Harriet Lane*, for passage to New York.

Captain Faunce will report to you when he is ready to receive them. This will probably be to-morrow morning early.

Very respectfully, your obedient servant,

G. J. PENDERGRAST,
Flag-Officer, Commanding West India Squadron.

Captain G. J. VAN BRUNT,
Commanding U. S. Steam Frigate Minnesota.

P. S.—If you have any sick men, you will please avail yourself of this opportunity to send them to New York.

G. J. PENDERGRAST.

Order of Flag-Officer Pendergrast, U. S. Navy, commanding West India Squadron, to Lieutenant Braine, U. S. Navy, Commanding U. S. S. Monticello, to seize supposed blockade runner Hurl.

Confidential.] U. S. FLAGSHIP CUMBERLAND,
Off Fortress Monroe, Va., June 23, 1861.

SIR: The following is an extract from a communication received from the Department:

It has been reported to this Department that a small steamer, supposed to be the *Hurl*, plying between Baltimore and Pocomoke River, is laden with articles contraband of war. This steamer must be seized and examined.

Smith's Island is represented as the rendezvous of stores, which will also call for your investigation.

In obedience to the above, you will proceed in the *Monticello*, and be governed by the above extract. After having performed this duty you will return to Hampton Roads.

Very respectfully,

G. J. PENDERGRAST,
Flag-Officer, Commanding West India Squadron.

Lieutenant Commanding BRAINE,
Commanding Monticello.

Report of Flag-Officer Pendergrast, U. S. Navy, commanding West India Squadron, regarding orders given to certain vessels of his command.

U. S. FLAGSHIP CUMBERLAND,
Off Fortress Monroe, Va., June 23, 1861.

SIR: I have the honor to inform the Department that the *Quaker City* returned to her station last evening, and that I have this day dispatched the *Harriet Lane* to New York with the crew of the privateer *Savannah*, lately brought here by the U. S. steam frigate *Minnesota* as prisoners. I would also inform the Department that in obedience to its order, under date of the 14th of June, marked confidential, I have directed Lieutenant Commanding Braine, of the U. S. S. *Monticello*, to make an examination of Smith's Island, and also to keep a lookout for the small steamer, supposed to be the *Hurl*, plying between Baltimore and the Pocomoke River.

I have the honor to be, sir, very respectfully, your obedient servant,

G. J. PENDERGRAST,
Flag-Officer, Commanding West India Squadron.

Hon. GIDEON WELLES,
Secretary of the Navy.

Affair on the Rappahannock River, June 24, 1861.

Report of Lieutenant Braine, U. S. Navy, commanding U. S. S. Monticello.

U. S. S. MONTICELLO,
Off the Rappahannock River, June 24, 1861.

SIR: Agreeably to your order of yesterday I left the Roads, and after organizing a launch's crew and exercising them at the gun, I anchored in Lynn Haven Bay.

Early this morning I started for Smith's Island, at the entrance of the Chesapeake Bay, supposing that to be the island referred to in your instructions. Upon a conversation with the pilot, I determined that the island you alluded to was Smith's Island, near Tangier Island.

Accordingly I steered up the Chesapeake Bay, speaking many vessels which had not been boarded. I stopped to endorse their papers, in the usual manner.

Receiving information from the pilot of a nature that led me to believe I might capture the steamer *Virginia* at a short distance from the mouth of the Rappahannock River, and it being about 3 p. m. and not being able to reach Pocomoke Sound before night, I ran a short distance up the river, and turning, on the way down not seeing any sign of a steamer, the pilot assured me of the strong Union sentiments of a gentleman named William Gersen [Gresham], residing on the bank. By this statement, and hoping to get some information, I sent the launch ashore, fully armed and equipped, under charge of Master's Mate Lewis A. Brown and Assistant Surgeon Heber Smith, and pilot, Mr. Phillips.

They landed, with gig, from the launch, and were cordially received (as I could plainly see the master of the house shake hands with them, and the same thing was repeated to me on their return). Hardly had this occurred when they were fired upon by a body of about eighty men. They returned the fire, and retreated to the boat and shoved off. Turning the bow of the launch toward the shore, they served their gun effectually. I opened the ship's battery on the rebels with grape and shell at 600 yards, and succeeded in demolishing the house and killing and wounding many, completely silencing their fire.

The men on board this ship, short-handed as we were, served their guns with great courage and promptness, and much credit is due to the officers and men for the brave manner in which they did their duty.

It is with much regret that I have to announce that our assistant surgeon, Heber Smith, was severely wounded in the mouth, as also in the hand, and I request that he may be removed where he can obtain the best medical attendance. August Peterson, quartermaster, was shot in the stomach, and I fear he can not live.

I am ready, sir, to proceed immediately, in accordance with your instructions, if you can spare me a gentleman to act as surgeon. I forward herewith the report of Acting Master's Mate L. A. Brown, who was in command of the expedition.

I am, respectfully, your obedient servant,

D. L. BRAINE,
Lieutenant, in Charge U. S. S. Monticello.

Flag-Officer G. J. PENDERGRAST,
Commanding West India Squadron.

Report of Flag-Officer Stringham, U. S. Navy, commanding Atlantic Blockading Squadron, transmitting report of Master's Mate Brown, U. S. Navy, U. S. S. Monticello.

U. S. S. MINNESOTA,
Hampton Roads, June 30, 1861.

SIR: I have the honor to acknowledge receipt of your letter of June 28. I enclose the report of L. A. Brown, master's mate, U. S. S. *Monticello*, omitted in my letter No. 31.

The *Penguin* arrived yesterday. I have ordered her up off York River.

Respectfully, your obedient servant,

S. H. STRINGHAM,
Flag-Officer, Atlantic Blockading Squadron.

Hon. GIDEON WELLES,
Secretary of Navy.

[Enclosure.]

U. S. S. MONTICELLO,
Off the Rappahannock River, June 24, 1861—8 p. m.

SIR: Agreeably to your orders of this date I armed and equipped the launch with eighteen men and took the gig in tow.

We pulled toward the shore until the water became too shallow to allow the launch to proceed any farther, when, leaving the howitzer's crew with four other men in the launch, I took the balance with Dr. Smith and Mr. Phillips, the pilot, in the gig and pulled on shore. Dr. Smith and the pilot went first and were cordially shaking hands with the owner of the house as I and my men, armed with revolvers and Sharps rifles, came up. I heard a man on the stoop say that there was a company of well-drilled volunteers in the vicinity, and on my turning about I saw a company of armed and uniformed men stealing along the shore as if to cut off our retreat. I immediately ordered a retreat to the boat and fired off our carbines, many of which missed fire and then shoved off, having waded to the launch. As the retreating tide had left the gig high and dry on the beach, I had to leave it there. Dr. Smith, surgeon, and August Peterson, quartermaster, were wounded while wading to the launch. I immediately commenced firing the howitzer and did considerable execution and had fired a number of times when I was called back to the ship by your hail. Many of the shot struck the oars and launch, penetrating the side. The men acted nobly while under this galling fire, we being not more than 70 yards from the shore, and they deserve great credit.

I am, respectfully, your obedient servant,

L. A. BROWN,
Master's Mate, U. S. S. Monticello.

D. L. BRAINE, U. S. Navy,
Lieutenant, in Charge U. S. S. Monticello.

Report of Lieutenant Braine, U. S. Navy, commanding U. S. S. Monticello, announcing the death of Quartermaster Peterson of that vessel.

U. S. S. MONTICELLO,
Hampton Roads, June 26, 1861.

SIR: It is my painful duty to announce to you that August Peterson, quartermaster on board this ship, died at the hospital in Fortress

Monroe of the wound received during the action at Carter's Creek, in Rappahannock River, on Monday last.

Respectfully, your obedient servant,

D. L. BRAINE, U. S. Navy,
Lieutenant, in Charge U. S. S. Monticello.

Flag-Officer S. H. STRINGHAM,
Commanding Atlantic Blockading Squadron.

Report of Flag-Officer Stringham, U. S. Navy, commanding Atlantic Blockading Squadron, regarding wounding of Surgeon Smith, of the U. S. S. Monticello.

U. S. S. MINNESOTA,
Hampton Roads, June 26, 1861.

SIR: The acting assistant surgeon, Heber Smith, of the *Monticello*, was severely wounded in the affair at Carter's Creek, on the Rappahannock River, which makes it necessary for this vessel to have another assistant surgeon.

Will the Department please send one as soon as convenient?

Respectfully, your obedient servant,

S. H. STRINGHAM,
Flag-Officer, Atlantic Blockading Squadron.

Hon. GIDEON WELLES,
Secretary Navy.

Letter from Brigadier-General Magruder, C. S. Army, commanding at Yorktown, Va., to Colonel Deas, C. S. Army, transmitting statement of Joseph Christian.

HEADQUARTERS, *Yorktown, Va., June 27, 1861.*

SIR: I have the honor to send a report made to Colonel Crump, of an abortive attempt to land soldiers from an armed steamer in the Rappahannock River, where the enemy was driven back by our citizens. This morning at sunrise I sent a force of 1,500 men to support the cavalry and artillery under Major Hood, operating near and on the Poquosin, to meet any party sent from the enemy's works and cut it off. I shall join this force to-day.

The Reverend Mr. Adams will hand this to the colonel commanding the Virginia forces. I have been extremely indebted to this good and patriotic minister of the gospel for much assistance. He has lost everything in the cause, and I would like to see him appointed as chaplain to one of the regiments in this department.

I am, sir, very respectfully, your obedient servant,

J. B. MAGRUDER.

Colonel GEORGE DEAS,
Assistant Adjutant-General, C. S. Army.

[Enclosure.]

URBANA, VA., *June 26, 1861.*

MY DEAR SIR: I have just received a note by special messenger from C. W. Montague, esq., requesting me to furnish to you an accurate account of all the doings of the enemy on the Rappahannock on Monday evening last. I have taken much pains to gather from persons who have visited the scene of action and conversed with those who

were engaged in it the following particulars, which you may regard as reliable:

About 4 p. m. on Monday, the 24th, a war steamer, the *Star* [*Monticello*], of New York, of 1,000 tons burden, came to, opposite the house of Mr. James W. Gresham, of Lancaster, situated immediately on the river, about 12 miles below Urbana, on the Lancaster side. She dispatched to the shore three barges, one a very large one, with a swivel in the bow, and two smaller ones, all filled with armed troops. The large barge grounded on the flats. The other two came ashore with a number of armed men, variously estimated at between thirty and sixty. After reaching the shore some six or eight proceeded up to Mr. Gresham's house. One of the party accosted Mr. Gresham and introduced another of the party. The first named, it seems, was the pilot, who was captain of a wood vessel, and acquainted with Gresham. He enquired if he had any chickens or lambs for sale. Mr. Gresham replied that he had a plenty, but not a d—d one for that party. He then took the pilot aside and told him they had better be getting away, as there were troops in the neighborhood, and that he did not wish his premises to be the scene of a battle, as his mother was very ill in the house. While they were talking a small company of Lancaster troops, about thirty in number, were seen coming down the road in double-quick time. The alarm was given, and the enemy fled precipitately to their boats, our men firing into them as they shoved off. In their flight they left one of the barges. The men, in great confusion, crowded into the other, and others wading out to the large barge on the flats. In their flight they left, besides the barge, two breech-loading rifles, a revolver, and several swords, with coats, hats, and shoes, thrown away in their hasty retreat. It is confidently asserted that four of the enemy were killed in the boat. Nobody hurt on our side. As soon as our men fired on the enemy the ship opened her guns on Mr. Gresham's house. She fired fifty-three shot and shell, seventeen of which took effect, damaging the house to the amount of at least $1,000. As in all of our engagements, the preservation of life was most remarkable. One of the balls struck the bed on which Mrs. Gresham was lying ill. She was then removed to an outhouse and a bombshell came in and exploded in the room without injury to anyone.

I have given you in a very hurried manner these particulars, which I gather from most reliable sources of information. You will unite with us in contemptuous indignation at the cowardly conduct of these dastardly scoundrels, who, refusing to meet half their number face to face, at a safe distance, in their ship, destroy the property of our citizens.

I hope to be able to visit your camp soon and renew the acquaintance I had the pleasure of having with you last winter.

Hastily and truly, yours,

JOS. CHRISTIAN.

Colonel CHARLES A. CRUMP,
Gloucester Point, Va.

Report of Flag-Officer Pendergrast, U. S. Navy, commanding West India Squadron, of the arrival in Hampton Roads of the U. S. S. Union, bringing as prisoners the crew of the prize ship Amelia.

U. S. FLAGSHIP CUMBERLAND,
Off Fortress Monroe, Va., June 24, 1861.

SIR: I have the honor to inform the Department that the U. S. S. *Union*, Commander Goldsborough, arrived here last evening. The

Union brings as prisoners the crew of the ship *Amelia*, belonging to Charleston, S. C., from Liverpool, bound to Charleston; cargo, contraband goods. The said ship was seized by Commander Goldsborough on the 18th day of June, 20 miles east of Charleston light-house, and was sent to Philadelphia as a prize, in charge of a prize master and crew, by Captain Samuel Mercer, of the U. S. steam frigate *Wabash*. I shall retain the prisoners here until the arrival of Flag-Officer Stringham.

I have the honor to be, sir, very respectfully, your obedient servant,

G. J. PENDERGRAST,
Flag-Officer, Commanding West India Squadron.

Hon. GIDEON WELLES,
Secretary of the Navy, Washington, D. C.

Report of Commander Carr, U. S. Navy, commanding U. S. S. Quaker City, of attack by Confederate force upon a boat party from that vessel.

U. S. S. QUAKER CITY,
Hampton Roads, June 24, 1861.

SIR: While on the cruising ground of this vessel this morning, I picked up a man named Peter Lynch in an open boat, and who described himself as a refugee from Norfolk.

He informed me also that a man named Hayes, late master plumber of the Norfolk navy yard, had fled with him, and was at the time waiting on the beach.

I immediately dispatched an armed boat under charge of Acting Master Mather to bring him off, but which was fired upon before reaching the shore by a large body of mounted troops, who rushed from a concealed rendezvous in the woods.

I regret to inform you that James Loyd, ordinary seaman, was wounded, I fear mortally.

Acting Master Mather managed his boat to my satisfaction, and the boat's crew behaved well.

Very respectfully, your obedient servant,

O. CARR,
Commander, U. S. Navy, Commanding Quaker City.

Flag-Officer STRINGHAM, U. S. Navy,
Commanding U. S. Naval Forces, Hampton Roads, Virginia.

Letter from the Secretary of the Navy to Flag-Officer Stringham, U. S. Navy, commanding Atlantic Blockading Squadron, giving information of the shipping of provisions in aid of Confederates.

NAVY DEPARTMENT, *June 24, 1861.*

SIR: The following is an extract from a private letter received in this city.

Very respectfully, etc.,

GIDEON WELLES.

Commodore S. H. STRINGHAM,
Comdg. Atlantic Blockading Squadron, Hampton Roads, Virginia.

Report of Flag-Officer Stringham, U. S. Navy, commanding Atlantic Blockading Squadron, regarding disposition of captured vessels Sally Magee and Amelia.

U. S. S. MINNESOTA,
Hampton Roads, June 26, 1861.

SIR: I have the honor to inform you of the capture this morning of the bark *Sally Magee*, from Rio de Janeiro, bound to Richmond, Va., where she is owned, and the cargo also. I shall send her to New York, in charge of Lieutenant Bryant.

I have taken from the *Union* the three mates and twelve men found on board the ship *Amelia* when she was captured off Charleston, June 18, 1861. This ship was sent to Philadelphia. Will the Department please inform me what I shall do with these prisoners? The crew are a miserable set of Chinamen, Malays, etc. The officers are English and American.

The captain and crew of the *Savannah*, also of the *Hallie Jackson*, a list of whose names I have already forwarded to the Department, were sent in the *Harriet Lane* to New York June 24.

Yesterday, in Lynn Haven Bay, the *Quaker City* discovered a boat pulling toward them, which proved to have a man in it, deserting from the secessionists. He informed them there was another man on shore wishing to leave. The ship's boat pulled for the shore, but before arriving it was fired on by a large party, which suddenly appeared in view and which led them to suppose the other man was captured. Unfortunately a shot from the shore reached the boat, mortally wounding one man, who has since died.

The *Union* will go to sea to-day to return to her station off Savannah. I wish very much I had a more competent seagoing vessel to send in her place.

Very respectfully, your obedient servant,

S. H. STRINGHAM,
Flag-Officer, Atlantic Blockading Squadron.

Hon. GIDEON WELLES,
Secretary of Navy.

Report of Flag-Officer Stringham, U. S. Navy, commanding Atlantic Blockading Squadron, referring to various instructions received from the Department.

U. S. S. MINNESOTA,
Hampton Roads, June 27, 1861.

SIR: I have the honor to acknowledge receipt of your letter of June 24, in reference to Captain William M. Armstrong.

I have written a letter to him at Norfolk, which I shall send by the first opportunity.

I would respectfully ask whether it would not be well to issue a general order, publishing it in the newspaper, that all officers of the U. S. Navy in the rebellious States inform the Department how and where orders can reach them, or to report for duty at Washington forthwith.

The information you have given me in reference to Wilmington, N. C., I very much regret to hear, as I can not now fulfill your wishes for want of a proper vessel now on hand to send, but will attend to this as soon as I possibly can.

I shall send the *Union* back to her station off Savannah until a vessel arrives competent to take her place, which I hope will be soon.

The *Monticello* went, under orders from Commodore Pendergrast, to look after any "piratical work, or landing of contraband articles," as mentioned by "Union," enclosed in your confidential letter of June 11.

I forward the report* of Lieutenant D. L. Braine, who has not given such a reconnoisance of the island as I could have wished. I shall order him again to cruise off this island, and shall instruct him not to allow officers and men to land, leaving their boats, as in this instance, except it is actually necessary.

I enclose a copy of the Day Book, published at Norfolk, Va., June 20, which contains a very remarkable letter, purporting to be from the captain of the U. S. S. *St. Mary's*.

Respectfully, your obedient servant,

S. H. STRINGHAM,
Flag-Officer, Atlantic Blockading Squadron.

Hon. GIDEON WELLES,
Secretary of Navy.

Report of Lieutenant Albert Kautz, U. S. Navy, of the recapture of the prize brig Hannah Balch by the C. S. privateer Coffee, June 25, 1861.

WASHINGTON, D. C., *November 20, 1861.*

SIR: I have the honor to report my arrival in this city, after having been a prisoner for more than four months. I was ordered to the hermaphrodite brig *Hannah Balch*, as prize master, on the 20th of June last, by the commanding officer of the U. S. S. *Flag*, off Charleston, S. C.

I steered eastward till I reached the Gulf Stream, and kept in it till I was captured on the 25th of June, about 30 miles to the southward and eastward of Cape Hatteras.

The swell of the sea and the wind were both from the eastward. I had made a reasonable allowance for them, and I attribute my being 20 miles to the westward of my reckoning to the inaccurate chronometer belonging to the vessel. The steamer which captured me was the steamer *Coffee*, formerly of Norfolk, and had been cruising off Cape Hatteras, running out in the morning and back in the evening. She was commanded by Thomas B. Crossen [Thomas M. Crossan], formerly of the U. S. Navy, and carried a 32-pounder mounted on a pivot carriage; she also had quite a number of soldiers on board. I endeavored to make my escape by setting all sail and running free, but the steamer being a fast one and the brig a slow sailer I was soon overtaken and compelled to surrender.

I caused the three muskets I possessed and as many pistols and cutlasses to be thrown overboard to prevent them from falling into the hands of the enemy. The six men I had with me were sent to Fort Macon, N. C. The three merchantmen who belonged to the vessel were released, and I was sent to Raleigh. I received a parole to live in Warren County, N. C., but on the 25th of August it was taken from me and I was sent to Richmond, Va., where I was confined in a cell by order of Jefferson Davis, for the alleged reason that A. G. Hudgins was confined in the Tombs in New York.

---

* See p. 738.

Order of the Secretary of the Navy to Flag-Officer Stringham, U. S. Navy, commanding Atlantic Blockading Squadron, regarding the U. S. ship Cumberland.

NAVY DEPARTMENT, *June 27, 1861.*

SIR: As soon as the *Roanoke* arrives in Hampton Roads and Flag-Officer Pendergrast transfers his flag to her, you will send the *Cumberland* to Boston to be docked, etc.

If the *Cumberland* can not be spared immediately, you are authorized to retain her until your squadron is increased sufficiently to enable you to dispense with her services.

I am, respectfully, your obedient servant,

GIDEON WELLES.

Flag-Officer S. H. STRINGHAM,
Commanding Atlantic Blockading Squadron, Hampton Roads.

Order of the Secretary of the Navy to Flag-Officer Stringham, U. S. Navy, commanding Atlantic Blockading Squadron, regarding prizes.

NAVY DEPARTMENT, *June 28, 1861.*

SIR: You will please send a fair proportion of the prizes that may be captured to Boston.

I am, respectfully, your obedient servant,

GIDEON WELLES.

Flag-Officer S. H. STRINGHAM,
Comdg. Atlantic Blockading Squadron, Hampton Roads, Virginia.

Letter from the Secretary of the Navy to Flag-Officer Stringham, U. S. Navy, commanding Atlantic Blockading Squadron, regarding schooner Ada, of Baltimore.

Confidential.] NAVY DEPARTMENT, *June 28, 1861.*

SIR: The following is copied from a letter received at this Department.

Very respectfully, etc.

GIDEON WELLES.

Flag-Officer S. H. STRINGHAM,
Commanding Atlantic Blockading Squadron, Hampton Roads

[Enclosure.]

BALTIMORE, *June 26, 1861.*

When in Washington on Tuesday morning, I had the pleasure of having a conversation with you in regard to parties shipping goods in lower part of Maryland to be shipped thence to Virginia. I promised to call and see you again before I left for Baltimore, but business prevented me. I hasten to give you all the information I can. The name of it (the vessel) is *Ada*, of Baltimore, bound for the Rappahannock River. The captain's name is Sutton. Schooner painted dark green, with a red stripe around her bends. The gentleman who shipped the goods on the above vessel left here on last Friday afternoon in the steamer *St. Nicholas* for Leonardtown, Md., with a young girl in

Letter from by the Secretary of the Navy to Flag-Officer Stringham, U. S. Navy, commanding Atlantic Blockading Squadron, regarding communication with the blockaded States.

NAVY DEPARTMENT, *June 25, 1861.*

SIR: I enclose for your information a copy of a letter received at this Department.

Very respectfully, etc.,

GIDEON WELLES.

Commodore S. H. STRINGHAM,
Comdg. Atlantic Blockading Squadron, Hampton Roads, Virginia.

[Enclosure.]

POST-OFFICE,
Wilmington, Del., June 21, 1861.

SIR: Yesterday I telegraphed to Mr. Hoffman, collector at Baltimore, that Hon. G. P. Fisher had written to me from Dover that a lady named Bell, accompanied by her son, were en route for Baltimore to sail for Virginia in a small vessel recently repainted and renamed in Baltimore. The husband of the lady is in the Confederate (or rebel) Army. The vessel nominally trades to eastern shore of Maryland (really to Virginia) with stores. The female has been up to Philadelphia; from thence to Baltimore several times, and no doubt is collecting information.

The vessel, it is believed, slips in and out of York River during the temporary absence of the *Harriet Lane*. I have collected information from the mail agent on the Delaware road. I believe that constant communication is carried on through the navigable waters of Delaware and Maryland, and that I could carry any material I choose from Philadelphia to Virginia at any time.

Very respectfully,

A. H. GRIMSHAW,
Postmaster.

Hon. G. WELLES.

Letter from the Secretary of the Navy to Flag-Officer Stringham, U. S. Navy, commanding Atlantic Blockading Squadron, urging the necessity of a more effective blockade.

NAVY DEPARTMENT, *June 25, 1861.*

SIR: I enclose herewith a copy of a letter received at the Treasury Department and referred to this [Department].

Very respectfully,

GIDEON WELLES.

Flag-Officer S. H. STRINGHAM,
Comdg. Atlantic Blockading Squadron, Hampton Roads, Virginia.

[Enclosure.]

When I left Wilmington, N. C., three vessels had just arrived, one with a cargo of railroad iron from Cardiff, Wales; one with a cargo of molasses, from Cardenas; and one with a cargo of lime from Maine. The latter vessel was bound to Charleston, but finding that harbor blockaded, put into the port of Wilmington. When I left, no blockade was established off the Cape Fear River, and I have not seen any account of any since my arrival North. Unless Wilmington is blockaded, the blockade of Charleston Harbor is a practical nullity. There

Letter from the Secretary of the Navy to Flag-Officer Stringham, U. S. Navy, commanding Atlantic Blockading Squadron, regarding Confederate force near Norfolk and the inefficiency of the blockade of Wilmington, N. C.

NAVY DEPARTMENT, *June 28, 1861.*

SIR: Following you have copies of the contents of two letters received at this Department this a. m.

Very respectfully,

GIDEON WELLES.

Commodore STRINGHAM, etc.

[Enclosures.]

I have just heard from a reliable source that about fifteen days since the rebel force in and near Norfolk, Va., amounted to about 10,000 men, and also that the steamer *Yorktown* had been strengthened, houses taken off, and lined inside above the water line with railroad iron, and carried a battery of eight 32-pounder rifled guns, and is commanded by Lieutenant R. B. Pegram, late U. S. Navy. This may be of service to the Navy Department.

PHELPS.

While Charleston and Savannah as well as Virginia ports are blockaded, our port (Wilmington, N. C.) is overlooked. Vessels from England arrive and bring us what is wanted, our railroads distributing to every point of the compass aid and comfort to the Confederate States. Six British vessels have entered and cleared since the paper blockade was declared. One is now loading for England, her cargo furnishing funds to bring out munitions from England. More vessels are expected with railroad iron.

JACOB BREWSTER.

Report of Flag-Officer Stringham, U. S. Navy, commanding Atlantic Blockading Squadron, giving disposition of vessels of his command.

U. S. S. MINNESOTA,
Hampton Roads, June 29, 1861.

SIR: I have the honor to return to the Department the present disposition of the vessels composing the Atlantic Blockading Squadron and their capacity for that service:

Name.	Class.	Capacity.	Position.
Minnesota	Steamer	Good for Atlantic blockading	[Hampton Roads.]
Wabash	do	do	Off Charleston.
Jamestown	Sailing	do	Off Savannah.
Vandalia	do	do	Off Charleston.
Perry	do	do	Off Fernandina.
Flag	Steamer	do	Off Charleston.
Cumberland	Sailing	do	Hampton Roads, going into dock.
Union	Steamer	Unfit, carries no coal	Off Savannah.
Daylight	do	Fit for Chesapeake	To go off Rappahannock River.
Dawn	do	do	Baltimore, repairing.
Monticello	do	do	James River.
Quaker City	do	do	Cape Henry.
Mount Vernon	do	do	York River.
Harriet Lane	do	do	Repairing.
Yankee	do	Fit for tugboat	Do.

Will you be so kind as to send back the dingey of which you spoke to me this morning.

I am, respectfully, your obedient servant,

D. L. BRAINE,
Lieutenant, U. S. Navy, in Charge U. S. S. Monticello.

Flag-Officer S. H. STRINGHAM,
Commanding Atlantic Blockading Squadron.

Report of Flag-Officer Stringham, U. S. Navy, commanding Atlantic Blockading Squadron, regarding Engineer Jordan, late U. S. Navy, and the burning of steamers Merrimack and Glen Cove.

U. S. S. MINNESOTA,
Hampton Roads, June 26, 1861.

SIR: I herewith send a letter from Marshall P. Jordan, second assistant engineer, U. S. Navy, now on board this ship.

As I am informed by the commander of the *Mount Vernon* that he is a strong secessionist, will the Department please inform me what I shall do with him?

The commander of the *Mount Vernon* asked Mr. Marshall [Jordan] if he would take an oath not to fight against the United States, provided he was permitted to leave. He indignantly answered, No! He would be d——d if he would ever take that oath.

I am happy to inform the Department that reliable information was received from two deserters who were on board of the *Monticello* yesterday, named James Lane and Charles Hazard, that the *Merrimack* was burned to the water's edge. She was taken into dry dock, examined, and pronounced worthless. Her machinery was all destroyed. Also that the secession steamer *Glen Cove*, running up James River, was destroyed by fire.

Respectfully, your obedient servant,

S. H. STRINGHAM,
Flag-Officer, Atlantic Blockading Squadron.

Hon. GIDEON WELLES,
Secretary of Navy.

[Enclosure.]

U. S. S. MOUNT VERNON,
Hampton Roads, June 24, 1861.

SIR: As I have learned that a steamer containing many families will be down from the city of Norfolk to-morrow, and expecting a communication from the Department dismissing me from the service of the United States at the same time, I would most respectfully beg your permission to return to the flagship to-morrow morning in the U. S. S. *Daylight*, and, if free to depart, to take passage in the steamer on her return to Norfolk, or if not at liberty so to do, to endeavor to learn some tidings of my family.

My great anxiety on their account is my excuse for thus troubling you.

I have the honor to be, very respectfully, your obedient servant,

MARSHALL P. JORDAN,
Late Second Assistant Engineer, U. S. Navy.

Flag-Officer G. J. PENDERGRAST,
Commanding U. S. Naval Forces in Chesapeake Bay.

Report of Flag-Officer Stringham, U. S. Navy, commanding Atlantic Blockading Squadron, of the rescue by the U. S. S. Quaker City of a small boat containing refugees.

U. S. S. MINNESOTA,
Hampton Roads, July 1, 1861.

SIR: I have the honor to inform the Department that yesterday, June 30, the U. S. S. *Quaker City*, while cruising off Cape Henry, discovered and picked up a small sailboat containing seven men. She brought them and the boat to the flagship. They proved to be five Northern men, residents of Pennsylvania and New Jersey, who have been residing in North Carolina, engaged in their various mechanical occupations in the neighborhood of Washington, N. C.

Fearing ill treatment, and the alternative of being compelled to join in the rebellion or suffering personal violence, they made the best arrangements they could, and, through the aid of some Union men with whom they were on good terms, they (after a week's navigation by day and night, the last part of it from near Cape Hatteras, being out at sea, and running great risk of being captured at the various inlets, where they represent the North Carolina rebels to have a small force of men with light batteries) have at last, to their great relief, reached this point, asking and receiving that protection which is due to loyal citizens.

The two remaining persons, one a native of Wilmington, Del., though now resident of North Carolina, where his sick wife now anxiously awaits the issue of his effort to serve these men, request permission to return. The young man who accompanies him seems a well-disposed citizen of North Carolina. I shall take the liberty of permitting them to start back with their sailboat, hoping they will not be discovered by the secession forces, they so much fear.

It was through the kindness and aid of these men that the Northern citizens were able to get off.

Respectfully, your obedient servant,

S. H. STRINGHAM,
Flag-Officer, Atlantic Blockading Squadron.

Hon. GIDEON WELLES,
Secretary Navy.

Report of Flag-Officer Stringham, U. S. Navy, commanding Atlantic Blockading Squadron, regarding the disposition of vessels of his command.

U. S. S. MINNESOTA,
Hampton Roads, July 1, 1861.

SIR: I have the honor to acknowledge receipt of two confidential communications from the Department, dated June 28, also a notice of the same date to Mr. Van R. Morgan, late lieutenant U. S. Navy, apprising him that his name has been stricken from the rolls of the Navy, which I shall forward to him by the first opportunity.

I would also inform the Department that I shall have one steamer off York River, the *Daylight*, Commander Lockwood, and one off the Rappahannock, the *Mount Vernon*, Commander Glisson, and the *Penguin* and *Albatross* I shall send over on the eastern shore of Virginia. The *Albatross* arrived to-day.

I have just heard from Lieutenant Mygatt that the steamer *St. Nicholas*, mentioned in your confidential communication of June 28, has

I shall send the *Monticello* off the mouth of the Rappahannock. Will the Department please send, as soon as convenient, an assistant surgeon for this vessel to take the place of the one wounded, of which I have apprised the Department?

Your letter containing suggestions in reference to York River has also been received. I have always considered this point and the Rappahannock very important, and have had a vessel off the former, but the *Dawn* has now gone to Baltimore for repairs. I hope she will soon be here to take her place again at that point.

I have also received your letter of June 25, enclosing copy of letter from A. H. Grimshaw.

Respectfully, your obedient servant,

S. H. STRINGHAM,
Flag-Officer, Atlantic Blockading Squadron.

Hon. GIDEON WELLES,
Secretary of Navy.

P. S.—Since writing the above I have received a request from Major-General Butler that the *Monticello* be permitted to remain at Newport News; I shall, therefore, send either the *Mount Vernon* or *Daylight* up to the Rappahannock.

S. H. S.

Report of Flag-Officer Stringham, U. S. Navy, commanding Atlantic Blockading Squadron, regarding proposed transfer of Rodman cannon for the use of the Navy.

U. S. S. MINNESOTA,
Hampton Roads, June 27, 1861.

SIR: I have the honor to acknowledge receipt of your letter, dated June 25, in which you apprise me that instructions will be issued, subject to the approval of Major-General Butler, to transfer to my charge one of the large pieces of ordnance now at this point, known as the Rodman cannon, and that for the purpose of preparing the gun for active operations afloat "you (I) will take all practicable dispatch to cause to be purchased a suitable vessel to sustain its weight, 49,099 pounds, exclusive of carriage, etc., and fit the vessel in such manner as your (my) experience may dictate."

I hasten to inform the Department that there is no vessel here that could be used with any advantage, and I doubt whether we shall be able to procure one this side of New York.

If the Department will direct one to be purchased there and properly fitted, or if they will permit me to go, I think I might select a suitable one and have her immediately put in proper condition to receive the gun, and carry into effect as soon as practicable the wishes of the Department.

I have received the work, Rodman on Experiments with Cannon and Powder, mentioned in your letter June 25.

Respectfully, your obedient servant,

S. H. STRINGHAM,
Flag-Officer, Atlantic Blockading Squadron.

Hon. GIDEON WELLES,
Secretary Navy.

Letter from the Secretary of the Navy to Flag-Officer Stringham, U. S. Navy, commanding Atlantic Blockading Squadron, transmitting information from U. S. consul at St. Petersburg regarding ship Noemie, from Charleston, S. C.

NAVY DEPARTMENT, *July 1, 1861.*

SIR: I herewith enclose for your information a copy of an extract from a dispatch received by the honorable Secretary of State, from Caleb Croswell, esq., U. S. consul at St. Petersburg, respecting the ship *Noemie*, of Charleston, S. C.

I am, respectfully, your obedient servant,

GIDEON WELLES.

Flag-Officer S. H. STRINGHAM,
Comdg. Atlantic Blockading Squadron, Hampton Roads, Virginia.

[Enclosure.—Extract.]

CONSULATE OF THE UNITED STATES OF AMERICA,
St. Petersburg, May 28, 1861.

SIR: * * * The ship *Noemie*, from Charleston, Captain John Johnson, which arrived at Cronstadt last week with a cargo of cotton, I am informed, displayed the flag of the Confederate States at the main while at Copenhagen and Elsinore.

The vessel came into Cronstadt under the flag of the Union, but on learning what had occurred before her arrival here, I went to Cronstadt and examined the ship's papers deposited with the agent of this consulate, and found that she had the usual United States register.

The vessel is owned by a mercantile firm in Charleston. The captain is from Baltimore. Captain Johnson is a secessionist, and probably took this course to show it and make an excitement.

I have thought proper to mention these particulars on account of the rumors which Captain Johnson's desire thus to exhibit his attachment to a bad cause has produced, some of which may find their way to the United States.

* * * * * * *

I have the honor to remain, your obedient servant,

CALEB CROSWELL,
U. S. Consul.

Hon. WM. H. SEWARD,
Secretary of State.

Letter from the Secretary of the Navy to Flag-Officer Stringham, U. S. Navy, commanding Atlantic Blockading Squadron, authorizing purchase of a vessel for the Rodman cannon.

NAVY DEPARTMENT,
Washington, July 1, 1861.

SIR: Your dispatch (No. 36) of the 27th ultimo, in reference to the proposed plan for mounting the large piece of ordnance now at Old Point on a suitable vessel, and the means of procuring such a vessel, has been received.

The Bureau of Ordnance has already placed you in communication with parties who are disposed to furnish what perhaps may prove to be the proper kind of vessel for the service designated; but to save

his charge, for the purpose of carrying letters and papers on her person, and from there or some other point in the neighborhood, to cross the Potomac for the Virginia shore. The party's name is William Bayne, doing a cigar and tobacco business in the city of Baltimore, and having a brother in Westmoreland County, Va., doing business at Baynesville, Va., 2 miles from the Potomac, opposite Port Tobacco, Md.

Letter from the Secretary of State to the Secretary of the Navy, transmitting copy of advertisements regarding steam communication between Liverpool and Charleston, S. C.

DEPARTMENT OF STATE,
Washington, June 28, 1861.

SIR: Herewith I have the honor to communicate to you for your information a copy of two advertisements which appeared in Gore's General Advertiser, of Liverpool, on the 6th instant, relative to steam communication between that place and the cities of New Orleans and Charleston.

I have the honor to be, sir, your obedient servant,

WILLIAM H. SEWARD.

Hon. GIDEON WELLES,
Secretary of the Navy.

[Enclosure.]

New Orleans.—Steam communication between Liverpool and New Orleans.

The British and American Southern Steamship Company's first-class iron screw steamers are intended to sail from Liverpool to New Orleans as follows: *Malacca*, 7th August; *Rangoon*, 4th September. To be followed every alternate Wednesday by other first-class screw steamers now building.

For further particulars apply to

F. SABEL,
Agent, 19 Water Street, Liverpool.

Charleston.—Steam communication between Liverpool and Charleston.

A first-class steamship will be dispatched from Liverpool to Charleston on or about the 15th July next. A monthly service will be established.

Goods and passengers for New Orleans, Mobile, and Savannah can be forwarded by this line, Charleston having direct railway communication with all the Southern and Western cities.

For further particulars apply to

FRASER, TRENHOLM & CO.,
10 Rumford Place, or to
M. G. KLINGENDER & CO.,
Tower Buildings, 22 Water Street.

[Endorsement.]

Send copies of advertisements to Flag-Officers Stringham and Mervine.

W.

be stricken out it would result in benefit to the men, besides giving room (now occupied with whisky casks) for more useful and valuable articles.

Respectfully, your obedient servant,

S. H. STRINGHAM,
Flag-Officer, Atlantic Blockading Squadron.

Hon. GIDEON WELLES,
Secretary Navy.

Report of Flag-Officer Stringham, U. S. Navy, commanding Atlantic Blockading Squadron, regarding the U. S. S. Quaker City.

U. S. S. MINNESOTA,
Hampton Roads, July 3, 1861.

SIR: Captain Carr, of the U. S. S. *Quaker City*, has asked permission to have 1 gunner's mate, 1 carpenter's mate, 1 quarter gunner, and 2 quartermasters rated aboard the *Quaker City*. Have I permission to grant his request?

Respectfully, your obedient servant,

S. H. STRINGHAM,
Flag-Officer, Atlantic Blockading Squadron.

Hon. GIDEON WELLES.

Letter from the Secretary of the Navy to Flag-Officer Stringham, U. S. Navy, commanding Atlantic Blockading Squadron, transmitting letters from the Secretary of the Treasury regarding transfer of American vessels to British ownership.

NAVY DEPARTMENT, *July 3, 1861.*

SIR: I herewith transmit for your information a copy of a letter in reply to one from this Department, addressed to me on the 27th ultimo by the honorable Secretary of the Treasury, respecting the transfer of American vessels to British ownership, and to the provisional registers issued in such cases by British consuls.

I am, respectfully, your obedient servant,

GIDEON WELLES.

Flag-Officer S. H. STRINGHAM,
Comdg. Atlantic Blockading Squadron, Hampton Roads, Virginia.

[Enclosure.]

TREASURY DEPARTMENT, *June 27, 1861.*

SIR: I have the honor to acknowledge the receipt of your letter of the 25th instant, and enclosure, respecting the transfer of American vessels to British ownership, and to the provisional registers issued in such cases by British consuls.

The act of the British Parliament, entitled the merchant shipping act, of 1854, confers on the consuls of her Britannic Majesty, in the case of the sale of a foreign bottom to a person authorized by the act to become the owner of British shipping, the power of issuing a provisional or temporary register, and to engage a crew for a vessel so transferred.

Name.	Class.	Capacity.	Position.
Savannah	Sailing	Not reported	
St. Lawrence	do	do	
Dale	do	do	
Iroquois	Steamer	do	
Penguin	do	do	
Albatross	do	do	
Young America	do	Seized; not available	

Respectfully, your obedient servant,

S. H. STRINGHAM,
Flag-Officer, Atlantic Blockading Squadron.

Hon. GIDEON WELLES.

Letter from the Secretary of the Navy to Flag-Officer Stringham, U. S. Navy, commanding Atlantic Blockading Squadron, regarding the ship Alliance.

NAVY DEPARTMENT, *June 29, 1861.*

SIR: The following, from a letter received at this Department, is given for your information.

Very respectfully, etc.,

GIDEON WELLES.

Flag-Officer STRINGHAM, etc.

[Enclosure.]

The ship *Alliance*, which was ordered away off Charleston some time since by the U. S. blockading squadron, has been lying in this harbor (St. Johns) two weeks. Yesterday (Sunday) the Palmetto flag was flying at her mizzen all day. She now hails from Liverpool, England, but was formerly owned, and perhaps is still in reality owned, in Charleston, S. C. Her captain and mate both belong there. She is loaded with railroad iron, and is now waiting orders from Liverpool. There are suspicions that she has also arms beneath the iron rails.

Order of the Secretary of the Navy to Flag-Officer Stringham, U. S. Navy, commanding Atlantic Blockading Squadron, regarding recharter of steamer Monticello.

NAVY DEPARTMENT, *July [1?], 1861.*

SIR: Be pleased to send the steamer *Monticello* to New York for the purpose of being delivered up at the expiration of her charter, on the 2d instant. The Department has proposed to her owners to recharter her for three months, provided they will thoroughly repair her and put her in condition for efficient sea service.

I am, respectfully, your obedient servant,

GIDEON WELLES.

Flag-Officer S. H. STRINGHAM,
Comdg. Atlantic Blockading Squadron, Hampton Roads, Virginia.

particulars contained in those forms as can be obtained without requiring a new survey or measurement; and this declaration should, so far as possible, be in the same form, and be made with the same formalities and precautions as declarations given for the purpose of the final registry of the ship, except that it must be marked "Provisional."

He will then prepare a certificate of registry, adhering as nearly as possible to the Form D in the schedule of the act, except that at the top must be written in large and conspicuous characters the word "Provisional," and that at the foot or in some conspicuous place must be added the words "This provisional certificate of registry continues in force only until the —— day of ——— (insert the day of the expiration of six months from the date), or until she completes her voyage from ——— (insert the port at which the certificate is given) to some port at which there is a British registrar, whichever first happens." The provisional certificate must be signed by the consul instead of by the registrar, and must be sealed with his official seal. No official number is to be inserted. A form of provisional certificate of registry, filled up according to the circumstances of the case as assumed, is given in the appendix. (Form C 2.)

He will keep a duplicate of the certificate and send it with the declaration to the commissioners of customs in London on the first convenient opportunity, and in so doing he will endorse on the certificate a statement of the British port to which the ship is bound.

He will warn the master and the purchaser, or his agent, that the provisional certificate is only in force until the ship reaches the first British port at which there is a registrar, or at the expiration of six months, whichever first happens, and that she must then be surveyed, measured, and completely registered.

Order of the Secretary of the Navy to Flag-Officer Stringham, U. S. Navy, commanding Atlantic Blockading Squadron, regarding transportation of Miss Segar.

NAVY DEPARTMENT, *July 3, 1861.*

SIR: Mr. Joseph Segar has a daughter in the city of Norfolk whom he is desirous of having brought down to Old Point Comfort to join the rest of his family.

You will please send a small vessel or boat up to Norfolk with a flag of truce for the purpose of bringing away Miss Segar.

I am, respectfully, your obedient servant,

GIDEON WELLES.

Flag-Officer S. H. STRINGHAM,
Comdg. Atlantic Blockading Squadron, Hampton Roads, Virginia.

Letter from the Secretary of the Navy to Flag-Officer Stringham, U. S. Navy, commanding Atlantic Blockading Squadron, regarding reported breach of blockade.

NAVY DEPARTMENT, *July 3, 1861.*

SIR: The following is given for your information.

Very respectfully, etc.,

GIDEON WELLES.

Flag-Officer S. H. STRINGHAM,
Commanding, etc.

gone into the Rappahannock River. He has just come down in the *Reliance* to give me this information.

I shall have a steamer off those points from this time on. The Department will see that I have not one steamer or vessel at my command for the coast of North Carolina.

It is very essential that the *Monticello* remain at the mouth of the James River until the return of the *Harriet Lane*, as the forces at Newport News are threatened by steamers from Richmond.

I have learned this day of the death of Captain William M. Armstrong; therefore I reenclose the orders of the Department to him dated 24th June, 1861.

Respectfully, your obedient servant.

S. H. STRINGHAM,
Flag-Officer, Atlantic Blockading Squadron.

Hon. GIDEON WELLES,
Secretary of Navy.

Report of Flag-Officer Stringham, U. S. Navy, commanding Atlantic Blockading Squadron, of the capture of the schooner Sally Mears.

U. S. S. MINNESOTA,
Hampton Roads, July 1, 1861.

SIR: I have the honor to inform the Department that I have captured this day, and now hold subject to the direction of the Department, the schooner *Sally Mears*, of Yorktown, Va., of 157$\frac{62}{95}$ tons burden.

The captain, George Richardson, and four men are on board this ship.

Shall I use the vessel down here? She is in ballast.

Respectfully, your obedient servant,

S. H. STRINGHAM,
Flag-Officer, Atlantic Blockading Squadron.

Hon. GIDEON WELLES,
Secretary of Navy.

Letter from the Secretary of the Navy to Flag-Officer Stringham, U. S. Navy, commanding Atlantic Blockading Squadron, regarding the sailing from Liverpool of ship Bamberg.

NAVY DEPARTMENT, *July 1, 1861.*

[SIR:] The following extract from a letter written by the surveyor of the port of New York is sent for your information.

Very respectfully, etc.,

GIDEON WELLES.

Flag-Officer S. H. STRINGHAM, etc.

[Enclosure.]

The ship *Bamberg* (or *Bromberg*), which sailed from Liverpool some time since with a large quantity of arms and munitions of war for the Southern States, has arrived at Havana, having been ordered off from the Passes of the Mississippi by the blockading squadron.

It is said that she has on board upward of 60 tons of arms, and undoubtedly a further attempt will be made to land them at some Southern port.

Letter from the Secretary of the Navy to Flag-Officer Stringham, U. S. Navy, commanding Atlantic Blockading Squadron, transmitting information from U. S. consul at St. Petersburg regarding ship Noemie, from Charleston, S. C.

NAVY DEPARTMENT, *July 1, 1861.*

SIR: I herewith enclose for your information a copy of an extract from a dispatch received by the honorable Secretary of State, from Caleb Croswell, esq., U. S. consul at St. Petersburg, respecting the ship *Noemie*, of Charleston, S. C.

I am, respectfully, your obedient servant,

GIDEON WELLES.

Flag-Officer S. H. STRINGHAM,
Comdg. Atlantic Blockading Squadron, Hampton Roads, Virginia.

[Enclosure.—Extract.]

CONSULATE OF THE UNITED STATES OF AMERICA,
St. Petersburg, May 28, 1861.

SIR: * * * The ship *Noemie*, from Charleston, Captain John Johnson, which arrived at Cronstadt last week with a cargo of cotton, I am informed, displayed the flag of the Confederate States at the main while at Copenhagen and Elsinore.

The vessel came into Cronstadt under the flag of the Union, but on learning what had occurred before her arrival here, I went to Cronstadt and examined the ship's papers deposited with the agent of this consulate, and found that she had the usual United States register.

The vessel is owned by a mercantile firm in Charleston. The captain is from Baltimore. Captain Johnson is a secessionist, and probably took this course to show it and make an excitement.

I have thought proper to mention these particulars on account of the rumors which Captain Johnson's desire thus to exhibit his attachment to a bad cause has produced, some of which may find their way to the United States.

* * * * * * *

I have the honor to remain, your obedient servant,

CALEB CROSWELL,
U. S. Consul.

Hon. WM. H. SEWARD,
Secretary of State.

Letter from the Secretary of the Navy to Flag-Officer Stringham, U. S. Navy, commanding Atlantic Blockading Squadron, authorizing purchase of a vessel for the Rodman cannon.

NAVY DEPARTMENT,
Washington, July 1, 1861.

SIR: Your dispatch (No. 36) of the 27th ultimo, in reference to the proposed plan for mounting the large piece of ordnance now at Old Point on a suitable vessel, and the means of procuring such a vessel, has been received.

The Bureau of Ordnance has already placed you in communication with parties who are disposed to furnish what perhaps may prove to be the proper kind of vessel for the service designated; but to save

time, and in accordance with your suggestion, the Department will permit you to proceed to New York and make such prompt arrangement as the case demands.

I am, very respectfully, your obedient servant,

GIDEON WELLES.

Senior Flag-Officer SILAS H. STRINGHAM, U. S. Navy,
Comdg. Atlantic Blockading Squadron, Hampton Roads, Virginia.

Report of Flag-Officer Stringham, U. S. Navy, commanding Atlantic Blockading Squadron, regarding purchase of vessel for Rodman cannon.

U. S. S. MINNESOTA,
Hampton Roads, July 2, 1861.

SIR: I have the honor to acknowledge two confidential letters from the Department, dated June 29, containing copies of advertisements; also letter dated June 28, with reference to boatswains. I think there is one man on board this ship competent to fill this position. I shall proceed to have him examined professionally and physically, as directed and required by the Department.

I have just returned from examining a vessel captured here, but find her unfit to carry the Rodman cannon. I also find the range of this gun is not over 2¾ miles, and this its extreme range with the largest charge of powder.

I must say that, from all the observation I can make, a rifle gun of 8, 9, or 10 inch caliber would be more effective and much more easily handled.

I think I have now at this point a vessel which could carry this latter gun if she had a little additional strengthening. She could be sent to Washington and prepared in a short time.

I enclose two letters from parties offering vessels to sell for this purpose. I should prefer the Department would make the purchase. I think the price fixed is very high. The Department could authorize a person to examine them, however.

I repeat that I would prefer a rifle gun. The vessel I allude to above is a prize.

Respectfully, your obedient servant,

S. H. STRINGHAM,
Flag-Officer, Atlantic Blockading Squadron.

Hon. GIDEON WELLES,
Secretary Navy.

Report of Flag-Officer Stringham, U. S. Navy, commanding Atlantic Blockading Squadron, regarding the ration.

U. S. S. MINNESOTA,
Hampton Roads, July 3, 1861.

SIR: I have the honor to state to the Department that I have been consulting with some of the officers in reference to the ration. They generally consider it a good ration, but think if the whisky part could

be stricken out it would result in benefit to the men, besides giving room (now occupied with whisky casks) for more useful and valuable articles.

Respectfully, your obedient servant,

S. H. STRINGHAM,
Flag-Officer, Atlantic Blockading Squadron.

Hon. GIDEON WELLES,
Secretary Navy.

Report of Flag-Officer Stringham, U. S. Navy, commanding Atlantic Blockading Squadron, regarding the U. S. S. Quaker City.

U. S. S. MINNESOTA,
Hampton Roads, July 3, 1861.

SIR: Captain Carr, of the U. S. S. *Quaker City*, has asked permission to have 1 gunner's mate, 1 carpenter's mate, 1 quarter gunner, and 2 quartermasters rated aboard the *Quaker City*. Have I permission to grant his request?

Respectfully, your obedient servant,

S. H. STRINGHAM,
Flag-Officer, Atlantic Blockading Squadron.

Hon. GIDEON WELLES.

Letter from the Secretary of the Navy to Flag-Officer Stringham, U. S. Navy, commanding Atlantic Blockading Squadron, transmitting letters from the Secretary of the Treasury regarding transfer of American vessels to British ownership.

NAVY DEPARTMENT, *July 3, 1861.*

SIR: I herewith transmit for your information a copy of a letter in reply to one from this Department, addressed to me on the 27th ultimo by the honorable Secretary of the Treasury, respecting the transfer of American vessels to British ownership, and to the provisional registers issued in such cases by British consuls.

I am, respectfully, your obedient servant,

GIDEON WELLES.

Flag-Officer S. H. STRINGHAM,
Comdg. Atlantic Blockading Squadron, Hampton Roads, Virginia.

[Enclosure.]

TREASURY DEPARTMENT, *June 27, 1861.*

SIR: I have the honor to acknowledge the receipt of your letter of the 25th instant, and enclosure, respecting the transfer of American vessels to British ownership, and to the provisional registers issued in such cases by British consuls.

The act of the British Parliament, entitled the merchant shipping act, of 1854, confers on the consuls of her Britannic Majesty, in the case of the sale of a foreign bottom to a person authorized by the act to become the owner of British shipping, the power of issuing a provisional or temporary register, and to engage a crew for a vessel so transferred,

For convenience of reference, I accompany this communication with a copy of the merchant shipping act, and would respectfully refer you to sections 18 and 54, and to forms B, C, and D in the appendix, as having a special bearing on the subject of your letter. I also transmit herewith, as referring to the same subject, an extract from instructions to British consuls under the merchant shipping act, prepared by the board of trade, and approved by her Britannic Majesty's secretary of state for foreign affairs.

As the British laws relating to navigation now stand, a foreign-built vessel, manned and commanded by foreigners, if she is owned by qualified persons, is entitled to carry the British flag and claim British privileges and protection. The sole requisite so to entitle her is British ownership.

No regulation, it is believed, can be prescribed, defining in advance the duties of naval officers in regard to their treatment of vessels sailing under provisional registers issued by British consuls. It must be left mainly to their good sense and sound discretion to determine the course to be pursued according to the circumstances of each case as it occurs. If they have satisfactory reason to believe that the sales are in contravention of the British laws as well as those of the United States, merely collusive, and the provisional registers, therefore, unlawfully issued, the vessels should be sent into port for legal proceedings.

The information contained in the accompanying documents would enable officers of the Navy to act understandingly in such cases. They should know under what circumstances and with what formalities such sales can lawfully be made, and what papers the consul is authorized to issue. Departure from the legal requirements in any material respect would justly occasion suspicion of bad faith, and the vessel should be treated accordingly.

It is with this view of the matter that the enclosed documents are respectfully communicated, in reply to your letter.

I am, very respectfully,

S. P. CHASE,
Secretary of the Treasury.

Hon. GIDEON WELLES,
Secretary of the Navy.

[Subenclosure.]

Extract from the instructions to British consuls under the merchant shipping act of 1854, prepared by the board of trade and approved by her Majesty's secretary of state for foreign affairs.

Purchases, mortgages, and sales at foreign ports.

22. Persons qualified to own British ships may purchase foreign ships at a foreign port. In such cases the ship can not be completely registered until she arrives at some port in the British dominions where there is a British registrar; but in order to prevent the inconveniences and dangers which would arise from the ship's making her homeward voyage without papers showing the national character, the consul is enabled to grant a provisional certificate, to remain in force until the expiration of six months, or until the arrival of the ship at some port having a British registrar, whichever first happens. In granting this certificate he will attend to the following particulars:

He will require from the purchaser, or from the agent of the purchaser, a declaration containing a statement of the qualification of the purchaser, similar to those contained in forms B or C (as the case may be) in the schedule to the act, and containing also such of the other

particulars contained in those forms as can be obtained without requiring a new survey or measurement; and this declaration should, so far as possible, be in the same form, and be made with the same formalities and precautions as declarations given for the purpose of the final registry of the ship, except that it must be marked "Provisional."

He will then prepare a certificate of registry, adhering as nearly as possible to the Form D in the schedule of the act, except that at the top must be written in large and conspicuous characters the word "Provisional," and that at the foot or in some conspicuous place must be added the words "This provisional certificate of registry continues in force only until the —— day of ——— (insert the day of the expiration of six months from the date), or until she completes her voyage from ——— (insert the port at which the certificate is given) to some port at which there is a British registrar, whichever first happens." The provisional certificate must be signed by the consul instead of by the registrar, and must be sealed with his official seal. No official number is to be inserted. A form of provisional certificate of registry, filled up according to the circumstances of the case as assumed, is given in the appendix. (Form C 2.)

He will keep a duplicate of the certificate and send it with the declaration to the commissioners of customs in London on the first convenient opportunity, and in so doing he will endorse on the certificate a statement of the British port to which the ship is bound.

He will warn the master and the purchaser, or his agent, that the provisional certificate is only in force until the ship reaches the first British port at which there is a registrar, or at the expiration of six months, whichever first happens, and that she must then be surveyed, measured, and completely registered.

Order of the Secretary of the Navy to Flag-Officer Stringham, U. S. Navy, commanding Atlantic Blockading Squadron, regarding transportation of Miss Segar.

NAVY DEPARTMENT, *July 3, 1861.*

SIR: Mr. Joseph Segar has a daughter in the city of Norfolk whom he is desirous of having brought down to Old Point Comfort to join the rest of his family.

You will please send a small vessel or boat up to Norfolk with a flag of truce for the purpose of bringing away Miss Segar.

I am, respectfully, your obedient servant,

GIDEON WELLES.

Flag-Officer S. H. STRINGHAM,
Comdg. Atlantic Blockading Squadron, Hampton Roads, Virginia.

Letter from the Secretary of the Navy to Flag-Officer Stringham, U. S. Navy, commanding Atlantic Blockading Squadron, regarding reported breach of blockade.

NAVY DEPARTMENT, *July 3, 1861.*

SIR: The following is given for your information.

Very respectfully, etc.,

GIDEON WELLES.

Flag-Officer S. H. STRINGHAM,
Commanding, etc.

[Enclosure.]

A pungy boat and schooner load with goods in Baltimore, clear for Deal's Island or Snow Hill, stop at Tangier beach inside the harbor, and wait for a suitable night, then run across the bay and enter the mouth of York River and discharge in Mobjack Bay, and at other times land in East River. The captain is not known, but he has tried to raise volunteers in Tangier. The pilot is known by the name of William Pruitt. Captain John Gibbons gives this information, and is ready to act.

I have heard to-day that the steamboat *St. Nicholas* affair was a trap set to catch the *Pawnee*. There may be other enterprises of the same character on foot, and it would be well to be on the lookout for them.

SAML. HINKS.

Order of the Secretary of the Navy to Flag-Officer Stringham, U. S. Navy, commanding Atlantic Blockading Squadron, regarding disposition of captured schooner Sally Mears.

NAVY DEPARTMENT, *July 3, 1861.*

SIR: I have received your No. 43 reporting the capture of the schooner *Sally Mears*, of Yorktown, [Va.], and asking what shall be done with her, as well as the captain and crew. You may use the schooner for such purposes as she may be fit.

The captain and crew may be released and put ashore somewhere.

Persons found on board vessels that are not privateers, and who are not engaged in the military services of the insurrectionary States, may be released, unless there is some good reason for retaining them.

I am, respectfully, your obedient servant,

GIDEON WELLES.

Flag-Officer S. H. STRINGHAM,
Comdg. Atlantic Blockading Squadron, Hampton Roads, Virginia.

Report of Flag-Officer Stringham, U. S. Navy, commanding Atlantic Blockading Squadron, of the capture of a pungy.

U. S. S. MINNESOTA,
Hampton Roads, July 3, 1861.

SIR: I have the honor to inform the Department that the steamer *Yankee* has just arrived here. I am sorry to find by reference to Mr. Werden's orders that he must proceed direct to Washington.

She would be of very great service here, as I have no small steamer at my command.

There is a small steamer which comes down almost daily from Norfolk, keeping out of range, which the *Yankee* could prevent and perhaps succeed in capturing, besides being of other great service as a towing vessel, for which we have use. I regret much that she can not stay now.

Yesterday there was sent to this place by the *Daylight* one of the bay pungies, about 30 tons burden, which I have sent this morning in tow of a steamer going direct to Washington, to be destroyed or used there. She is one of those used in carrying stores and communications from point to point on the Chesapeake.

By authority of your letter of June 5, I shall continue Flag-Officer Pendergrast and the vessels of his squadron, to aid and assist in the blockade, and send him upon the coasts of South Carolina and Georgia, if it meets with the approval of the Department.

Respectfully, your obedient servant,

S. H. STRINGHAM,
Atlantic Blockading Squadron.

Hon. GIDEON WELLES,
Secretary of Navy.

Report of Flag-Officer Stringham, U. S. Navy, commanding Atlantic Blockading Squadron, acknowledging Department's communications.

U. S. S. MINNESOTA,
Hampton Roads, July 4, 1861.

SIR: I have the honor to acknowledge receipt of your confidential [letter] of July 1, with extract relating to the ship *Bamberg* (or *Bromberg*). Also your letter of July 3, enclosing a letter from Hon. S. P. Chase, Secretary of the Treasury, respecting the transfer of American vessels to British ownership and to the provisional registers issued in such cases by British consuls.

Respectfully, your obedient servant,

S. H. STRINGHAM,
Flag-Officer, Atlantic Blockading Squadron.

Hon. GIDEON WELLES,
Secretary Navy.

Report of Commander Chandler, U. S. Navy, commanding U. S. S. Dawn, regarding repairs to vessel.

U. S. S. DAWN,
Baltimore, Md., July 4, 1861.—9 a. m.

SIR: I have the honor to inform you that I received, about 3 p. m. yesterday, your telegram of that date, directing me to "hurry the repairs on the *Dawn* and proceed down the bay with all dispatch."

The workmen on the boiler having finished about 10:30 a. m., we immediately commenced cleaning out and filling the boiler for a cold-water pressure, hoisting in our coal at the same time, which we finished about 1:30 a. m. this morning, after getting in about 73 tons. We had completed our watering yesterday morning and taken in all our stores except those required in the gunner's department, which have not yet been received. We found the boiler and flues to stand a pressure of 45 pounds, about as much as we could get on, our crew being much worn out with hoisting in and shoveling coal. I now have steam up, and will proceed down the bay at once in obedience to your orders.

I have the honor to be, very respectfully, your obedient,

WILLIAM CHANDLER,
Commander, U. S. Navy.

Hon. GIDEON WELLES,
Secretary of the Navy, Washington.

N. B.—I have engaged First Assistant Engineer Wyatt, but not discharged Master's Mate Woodstock, not being able to settle his account.

Report of Flag-Officer Pendergrast, U. S. Navy, commanding West India Squadron, of the hoisting of his flag on the U. S. S. Roanoke.

U. S. FLAGSHIP CUMBERLAND,
Off Fortress Monroe, Va., July 4, 1861.

SIR: I have the honor to inform the Department that I have this day been ordered by Flag-Officer Stringham to hoist my flag on board the U. S. steam frigate *Roanoke*. I would be glad to have the authority of the Department to transfer my flag-lieutenant, Mr. Todd; my secretary, Mr. Scherr; my clerk, Mr. Curtis, and the coxswain and boat's crew of the barge to the *Roanoke*. I would also request that the Department authorize the paymaster of the *Roanoke* to pay Captain Kintzing, of the marines, and my secretary, Mr. Scherr, two months' advance, the usual allowance to officers of ships fitting out.

I have the honor to be, sir, very respectfully, your obedient servant.

G. J. PENDERGRAST,
Flag-Officer, Commanding West India Squadron.

Hon. GIDEON WELLES,
Secretary of the Navy, Washington, D. C.

Letter from the Secretary of the Navy to Flag-Officer Stringham, U. S. Navy, commanding Atlantic Blockading Squadron, regarding the unprotected condition of Wilmington, N. C.

NAVY DEPARTMENT, *July 4, 1861.*

SIR: The enclosed copy of a letter received from the Department is forwarded, that you may be advised of movements on the coast of North Carolina.

Very respectfully,

GIDEON WELLES.

Flag-Officer S. H. STRINGHAM, etc.

[Enclosure.]

NEW YORK, *June 29, 1861.*

DEAR SIR: As a good Union man and a friend to the Administration, I take the liberty of informing your Excellency about the port of Wilmington, N. C., where vessels are continually coming in, changing their nationality, and taking cargoes for England at high rates to the great prejudice of the port of New York. Up to the 12th June none of the blockading squadron had been off Cape Fear River to notify the fort (Caswell) of the blockade, and some eight or ten vessels have left and sailed with full cargoes, and I have reason to believe vessels have cleared from here, and are about clearing for West India ports, and no doubt will fetch up there. * * * I have just learned that a Carolinian has been to St. John's and chartered a brig to go to Wilmington, N. C., for a load of naval stores.

PETER WILSON.

Hon. GIDEON WELLES, etc.

Order of the Secretary of the Navy to Flag-Officer Stringham, U. S. Navy, commanding Atlantic Blockading Squadron, to dispatch vessels in search of a Confederate privateer.

NAVY DEPARTMENT,
Washington, D. C., July 4, 1861.

SIR: You will dispatch the *Roanoke* without delay to the coast of North Carolina.

A rebel privateer has made several captures off Cape Hatteras.

If necessary, send the *Cumberland* also down the coast until more ships reach your command.

I am, respectfully, etc.,

GIDEON WELLES.

Flag-Officer SILAS H. STRINGHAM,
Commanding Atlantic Blockading Squadron, Hampton Roads.

Report of Flag-Officer Stringham, U. S. Navy, commanding Atlantic Blockading Squadron, regarding dispatch of vessels.

U. S. S. MINNESOTA,
Hampton Roads, July 5, 1861.

SIR: I have the honor to acknowledge receipt of your letter of July 4, in reference to the sailing of the *Roanoke*, also of the *Cumberland*. I have ordered the *Roanoke* to proceed without delay.

Respectfully, your obedient servant,

S. H. STRINGHAM,
Flag-Officer, Atlantic Blockading Squadron.

Hon. GIDEON WELLES,
Secretary of Navy.

Report of Commander Livingston, U. S. Navy, commanding U. S. S. Penguin, of the cruise of that vessel to York River, and giving information regarding steamer Wilson G. Small, from Baltimore.

U. S. S. PENGUIN,
Hampton Roads, July 5, 1861.

SIR: In pursuance of your order of the 29th ultimo, I proceeded off the mouth of York River. I saw no vessels pass in or out of that river during my stay there.

On the 1st instant your order of same date, through Lieutenant Commanding Mygatt, was received to blockade the mouth of the Rappahannock River. Got underway in company with steamer *Reliance* for the above river, and arrived same evening; saw no vessels there. On the 2d, Lieutenant Commanding Mygatt made a communication to me, which I herewith enclose, to the effect that the engineer had reported to him that it was necessary for the *Reliance* to return to repair; that it was unsafe to detain her, and having no orders in regard to this vessel, I did not order a survey, but suggested the same. He then left his station, to report himself to his commanding officer in the Potomac.

On the 2d instant, the *Mount Vernon* arrived, Commander Glisson informing me that he came to relieve me, and brought a pilot for me, but no orders from the commander in chief; but from a conversation with the pilot, I inferred that you wished me to cruise somewhat at my discretion in the Chesapeake. I therefore, at daylight on the 3d instant, weighed and steamed across the bay to Pocomoke Sound, boarding vessels on the way, as per list enclosed. On entering the bay, saw an American flag flying on Tangier Island in a village of that name; ran into the harbor and hoisted a jack, to induce them to come off, which they soon did. The three men who came off seemed strong Union, and represented to me that there was but one man on the island who was a secessionist; that he meant to hoist a secession flag to-morrow, and that a force would be over from Accomac on the 4th to take

Report of Flag-Officer Pendergrast, U. S. Navy, commanding West India Squadron, of the hoisting of his flag on the U. S. S. Roanoke.

U. S. FLAGSHIP CUMBERLAND,
Off Fortress Monroe, Va., July 4, 1861.

SIR: I have the honor to inform the Department that I have this day been ordered by Flag-Officer Stringham to hoist my flag on board the U. S. steam frigate *Roanoke*. I would be glad to have the authority of the Department to transfer my flag-lieutenant, Mr. Todd; my secretary, Mr. Scherr; my clerk, Mr. Curtis, and the coxswain and boat's crew of the barge to the *Roanoke*. I would also request that the Department authorize the paymaster of the *Roanoke* to pay Captain Kintzing, of the marines, and my secretary, Mr. Scherr, two months' advance, the usual allowance to officers of ships fitting out.

I have the honor to be, sir, very respectfully, your obedient servant.

G. J. PENDERGRAST,
Flag-Officer, Commanding West India Squadron.

Hon. GIDEON WELLES,
Secretary of the Navy, Washington, D. C.

Letter from the Secretary of the Navy to Flag-Officer Stringham, U. S. Navy, commanding Atlantic Blockading Squadron, regarding the unprotected condition of Wilmington, N. C.

NAVY DEPARTMENT, *July 4, 1861.*

SIR: The enclosed copy of a letter received from the Department is forwarded, that you may be advised of movements on the coast of North Carolina.

Very respectfully,

GIDEON WELLES.

Flag-Officer S. H. STRINGHAM, etc.

[Enclosure.]

NEW YORK, *June 29, 1861.*

DEAR SIR: As a good Union man and a friend to the Administration, I take the liberty of informing your Excellency about the port of Wilmington, N. C., where vessels are continually coming in, changing their nationality, and taking cargoes for England at high rates to the great prejudice of the port of New York. Up to the 12th June none of the blockading squadron had been off Cape Fear River to notify the fort (Caswell) of the blockade, and some eight or ten vessels have left and sailed with full cargoes, and I have reason to believe vessels have cleared from here, and are about clearing for West India ports, and no doubt will fetch up there. * * * I have just learned that a Carolinian has been to St. John's and chartered a brig to go to Wilmington, N. C., for a load of naval stores.

PETER WILSON.

Hon. GIDEON WELLES, etc.

Order of the Secretary of the Navy to Flag-Officer Stringham, U. S. Navy, commanding Atlantic Blockading Squadron, to dispatch vessels in search of a Confederate privateer.

NAVY DEPARTMENT,
Washington, D. C., July 4, 1861.

SIR: You will dispatch the *Roanoke* without delay to the coast of North Carolina.

with the waters of Virginia, that it seems but just she should participate in the honor of retaking Norfolk.

I have the honor to be, very respectfully, your obedient servant,

JOHN MARSTON, *Captain.*

Hon. GIDEON WELLES,
Secretary of the Navy, Washington, D. C.

Letter from the Secretary of the Navy to Flag-Officer Stringham, U. S. Navy, commanding Atlantic Blockading Squadron, regarding officers and crew of chartered steamer Quaker City.

NAVY DEPARTMENT, *July 5, 1861.*

SIR: The rates asked for by Commander Carr, in your letter of the 3d instant, are allowed.

It will be remembered that the *Quaker City* was chartered by certain parties in New York and sent to the Chesapeake, and at the expiration of the charter the Government continued it for three months, reserving to itself the right to place on board a naval officer to command, and afterwards a midshipman was added. The accounts were directed to be kept on board the *North Carolina*, at New York.

The owners of the *Quaker City* supplied the officers and crew and ran the vessel, and continue to do so, unless they violate the charter.

This Department can not make any acting appointments on board.

Lieutenant Mitchell may be ordered to the *Santee*, so as to permit that vessel to proceed to sea without delay. A first lieutenant will be sent to her by the earliest opportunity.

I am, respectfully, your obedient servant,

GIDEON WELLES.

Flag-Officer S. H. STRINGHAM,
Comdg. Atlantic Blockading Squadron, Hampton Roads, Virginia.

Order of Flag-Officer Pendergrast, U. S. Navy, commanding West India Squadron, to Captain Nicholson, U. S. Navy, commanding U. S. S. Roanoke, to prepare that vessel for sea.

U. S. FLAGSHIP CUMBERLAND,
Off Fortress Monroe, July 5, 1861.

SIR: I will transfer my flag this afternoon.

You will prepare your ship for sea with all possible dispatch. I will go to sea to-morrow morning.

You will avail yourself of any coal schooner present to fill up with coal.

Very respectfully,

G. J. PENDERGRAST,
Flag-Officer, Commanding West India Squadron.

Captain WM. C. NICHOLSON,
Commanding U. S. Steam Frigate Roanoke.

Report of Captain Chandler, U. S. Navy, commanding U. S. S. Dawn, regarding the condition of that vessel on arrival in Hampton Roads.

U. S. S. DAWN,
Hampton Roads, Virginia, July 5, 1861.

SIR: On my arrival here I have the honor to submit herewith a copy of my letter of yesterday's date to the honorable the Secretary of the

down the American flag; that they were determined it should not come down, and requested me to remain on the 4th, which I determined to do.

July 4, dressed the ship in honor of the day. I was informed at Tangier that the steamboat *Wilson G. Small*, from Baltimore, had some days before been down with a load of goods and landed at Pungoteague; that she made her appearance again on the 3d instant, but seeing us in the harbor, made off. This boat I hear is allowed to trade only as far as Great Annemessex River. In the evening weighed and stood over to the mouth of Great Annemessex River; spoke several vessels, saw nothing suspicious, anchored for the night. At daylight on the 5th, weighed and stood down the bay, and when off the mouth of the Rappahannock, communicated with the *Mount Vernon*. Captain Glisson had no news. At 10 a. m. saw steamer *Dawn* steering down the bay. At 11 a. m. spoke U. S. S. *Albatross*, bound to Rappahannock River.

Very respectfully, sir, your obedient servant,

J. W. LIVINGSTON,
Commanding U. S. S. Penguin.

Flag-Officer SILAS H. STRINGHAM,
Comdg. Atlantic Blockading Squadron, Hampton Roads, Virginia.

Report of Commander Gillis, U. S. Navy, commanding U. S. S. Monticello, of assistance rendered a shore force under Colonel Phelps, U. S. Army.

U. S. S. MONTICELLO,
Off Newport News, July 5, 1861.

SIR: In compliance with the request of Colonel Phelps, we took a position near noon to-day about 5 miles above the post, for the purpose of shelling the enemy in advance of a battalion which moved up the left bank of the river, and after our firing they entered the woods. This evening they returned to camp, reporting we had dispersed with our shell a body of cavalry which they could not afterwards overtake.

Colonel Phelps sent off his thanks for the promptness of our movement and the precision with which the shell were thrown.

I am, respectfully, your obedient servant,

JOHN P. GILLIS,
Commander, U. S. Navy.

Flag-Officer S. H. STRINGHAM, U. S. Navy,
Commanding Atlantic Blockading Squadron.

Request of Captain Marston, U. S. Navy, commanding U. S. ship Cumberland, to participate in the retaking of Norfolk.

U. S. S. CUMBERLAND,
Hampton Roads, July 5, 1861.

SIR: Having received orders from Flag-Officer Stringham to proceed to the South, and from thence to Boston, I would respectfully request that, as soon as this ship shall have completed her repairs, she be allowed to return to her present station, for the *Cumberland* has been so long and constantly employed here and has become so identified

Report of Commander Case, U. S. Navy (fleet captain), of disrespect shown to a flag of truce by Confederates.

U. S. FLAGSHIP MINNESOTA,
Hampton Roads, July 6, 1861.

SIR: I have the honor to report that in obedience to your order I hoisted a flag of truce on board the steam tug *Adriatic* at 1 o'clock p. m. and proceeded toward Norfolk to communicate with General Huger, as directed.

When about a mile below the Craney Island beacon, and after having passed the batteries on Sewell's and Bush's points, a shot was fired at the tug from Craney Island; it passed diagonally across the bow and struck within 20 feet. Had not the engine been stopped at the flash and the boat's head turned a little to starboard, the shot must, I think, have struck her.

I immediately ordered the tug anchored and left in the barge, with Midshipman McCook, to communicate with the boat which I supposed would meet me from Craney Island, as it did when I was up with a flag of truce in May last, but I had not got more than three or four boat's lengths from the tug when a second shot was fired at the barge, which passed directly over and struck about 30 yards from her.

My first impulse was to return immediately and report the circumstances to you, but my second led me to remain and ascertain if possible if the flag of truce had been fired on by order of General Huger or the commanding officer at Craney Island.

Two officers came off in a boat from Craney Island, of whom I asked the name of the commanding officer at the island and if General Huger was still at Norfolk.

The senior of the two (I did not learn their names) replied, "Colonel Richardson commands at Craney Island," but he did not know anything of General Huger.

I then stated that I was the bearer of a flag of truce to General Huger, but before I could transact any business in relation to it I must first ascertain from them if General Huger or the commanding officer had ordered the flag of truce to be fired on. If so, I had no further communication to make, but should return and report the facts to you.

The senior officer then stated that no such order had been given; the shot striking so near was accidental; he knew the flag of truce was coming up; had reported it to the commanding officer, when the order was given to fire a shot to stop her.

To this I replied: "A blank cartridge would have been all that was necessary and what was customary to stop a flag of truce." To this he said something about not knowing what was customary.

I then gave him your letter to General Huger, saying I would wait for an answer, at the same time asking him to give my compliments to the commanding officer, and say his men fired well; it was good target practice.

He replied: "The circumstances shall be reported to the commanding officer."

I also stated to him the difference in the reception of officers coming with flags of truce to us.

The officers left me at about 2:45 p. m. I remained until 6:45 p. m., and then left on my return without an answer from General Huger.

Navy; and to report the *Dawn* again ready for service, in as effective a condition perhaps as the patching of an old boiler and very old flues could make her. But there seemed to be, soon after we left Baltimore yesterday morning (for we can not yet get at the place in consequence of the coal lying up against the boiler, and the coal bunker being full), a leak in the lower part of the boiler itself on the starboard side, about 6 feet from the after end.

There are no passageways, as there should be, constructed between the coal bunkers and boilers on either side; and, not knowing whether the steamer would be eventually purchased by the Government, I did not feel justified in incurring the expense of their construction, at least (if not so purchased, and without benefit to the Government), before the boiler and flues (as repaired) had been tested, while the repairs and my departure were so hurried that the coal had to be received on board as soon as the workmen had finished and before the boiler and flues could be tested with steam.

In the cold-water pressure of 45 pounds night before last, however, there was no perceptible leak anywhere except in the manholes, one in each end of boiler, and a hand-hole in the front end, which was subsequently repaired as soon as we could let the water out of the boilers, and previously to filling it and firing up again, about 6 a. m., to come down here.

When the coal has been more used or removed from the starboard bunker, we shall then be enabled to ascertain more about this leak, the exact location of which is now a matter of surmise; but the fact itself is established by the quantity of hot water in the bilge and the difficulty of keeping up the requisite quantity of water in the boilers, without leaving the feed pipe all the time open.

We have been under a running pressure of not exceeding 25 pounds of steam, all the way down; and only on two occasions, while stopping for a short time, did it rise to from 28 to 30 pounds.

Last night, being reluctant to run past Smith's Point Shoals without the guide of the light and light-boat at that point, we came to anchor in the bay, about 5 or 6 miles to the southward and eastward of it, and waited for early daylight to proceed hither.

Accompanying this is a duplicate requisition from the engineer's and gunner's departments for articles needed therein and a list of the provisions on board.

I have the honor to be, very respectfully, your obedient,

WILLIAM CHANDLER,
Commander, U. S. Navy.

Flag-Officer S. H. STRINGHAM,
Comdg. Atlantic Blockading Squadron, Hampton Roads, Virginia.

Order of the Secretary of the Navy to Flag-Officer Stringham, U. S. Navy, commanding Atlantic Blockading Squadron, regarding a Rodman gun.

NAVY DEPARTMENT, *July 6, 1861.*

SIR: Your No. 44* has been received.

You will send the schooner to Washington when convenient. The Department's order respecting the Rodman gun is countermanded.

I am, respectfully, your obedient servant,

GIDEON WELLES.

Flag-Officer S. H. STRINGHAM,
Comdg. Atlantic Blockading Squadron, Hampton Roads, Virginia.

---

*See p. 758.

New York with one wheel, if deemed expedient by the honorable Secretary of the Navy. I shall suggest to Flag-Officer Stringham the propriety of proceeding to that port without delay, as I am of opinion the necessary repairs can be effected with more dispatch at that place than elsewhere.

A drawing of the engines of the *Susquehanna* is in the Department at Washington, showing dimensions, etc., and might be sent to the foundry to which the order for the work will be given.

I have the honor to be, sir, very respectfully, your obedient servant,

JNO. S. CHAUNCEY, *Captain.*

Hon. GIDEON WELLES,
Secretary of the Navy.

I enclose a copy of the report of the chief engineer and also the report of a board of survey upon the wheel.

JNO. S. CHAUNCEY.

[Subenclosure.]

U. S. S. SUSQUEHANNA,
Hampton Roads, July 6, 1861.

SIR: In consequence of the overheating and cutting of the inboard slide to starboard engine, also upper gib to same (exigencies of the service permitting), I would respectfully request a delay of about six hours for the purpose of readjusting their rubbing surfaces.

Yours, etc.,

GEO. SEWELL.

Captain JOHN S. CHAUNCEY,
U. S. S. Susquehanna.

Order of the Secretary of the Navy to Commander Palmer, U. S. Navy, commanding U. S. S. Iroquois, to proceed to duty in the Atlantic Blockading Squadron.

NAVY DEPARTMENT, *July 6, 1861.*

SIR: The U. S. steam sloop *Iroquois*, under your command, is to form a part of the Atlantic Blockading Squadron. As soon, therefore, as she is prepared for sea, you will proceed with her to Hampton Roads and report to Flag-Officer S. H. Stringham for duty.

Transmit to the Department before sailing a muster roll of the crew and a separate list of the officers of the *Iroquois.*

I am, respectfully, your obedient servant,

GIDEON WELLES.

Commander JAS. S. PALMER,
Commanding U. S. S. Iroquois, New York.

Order of the Secretary of the Navy to Flag-Officer Stringham, U. S. Navy, commanding Atlantic Blockading Squadron, regarding U. S. S. Yankee.

NAVY DEPARTMENT, *July 8, 1861.*

SIR: I have received your dispatches Nos. 49, 50, 51, and 52.

Increasing difficulties in the Potomac render it necessary to detain the *Yankee* here for a short time. So soon as she can be spared she will be sent to Hampton Roads.

I am, respectfully, your obedient servant,

GIDEON WELLES.

Flag-Officer S. H. STRINGHAM,
Comdg. Atlantic Blockading Squadron, Hampton Roads, Virginia.

Two or three steamers communicated with Craney Island and Norfolk while we were at anchor.

I am, sir, very respectfully, your obedient servant,

A. LUDLOW CASE,
Commander, U. S. Navy, and Fleet Captain.

Flag-Officer S. H. STRINGHAM,
Comdg. Atlantic Blockading Squadron, Hampton Roads, Virginia.

Report of Captain Chauncey, U. S. Navy, commanding U. S. S. Susquehanna, regarding the temporary disabling of that vessel.

U. S. S. SUSQUEHANNA,
At Anchor off Lynn Haven Bay, July 6, 1861.

SIR: I have the honor to report that, in obedience to instructions from the honorable Secretary of the Navy of 12th June to communicate on my way down the coast with the vessels of the blockading squadron, and being obliged to lie by for six hours in accordance with a request from the chief engineer of this ship to effect some necessary repairs to the engines, and while on my way up to the anchorage for the above purpose the starboard water-wheel shaft suddenly broke, thus disabling the ship for active and efficient service. I enclose a report of the occurrence to the honorable Secretary of the Navy, and shall await further orders.

I am informed by the chief engineer of this ship that she will be in readiness by 8 a. m. to-morrow to proceed to New York with one wheel, if deemed expedient, and I beg leave to suggest the propriety of proceeding to that port without delay, as the necessary repairs can be effected with more dispatch at that place than elsewhere.

I have the honor to be, sir, very respectfully, your obedient servant,

JNO. S. CHAUNCEY,
Captain.

Flag-Officer S. H. STRINGHAM,
Commanding Blockading Squadron, Hampton Roads.

[Enclosure.]

U. S. S. SUSQUEHANNA,
At Anchor off Lynn Haven Bay, July 6, 1861.

SIR: After closing my dispatch of this morning, and while proceeding up to the anchorage to communicate with the flag-officer and with the intention of proceeding to sea this evening, in accordance with your orders, after the necessary repairs to the engine, the starboard water-wheel shaft of the engine broke without any previous warning, thus entirely disabling the ship for active service. The result of a critical examination of the fracture shows an imperfection in the forging of the shaft and a bad flaw. The shaft has been running for eleven years, or since the construction of the ship, and has been, to all external appearance, sound.

Although this accident is a severe disappointment to me, yet I consider it providential that it has occurred at this particular time and place. Had it taken place in a gale of wind or rough weather, it might have been attended with more serious results to machinery, etc.

I have reported the facts to Flag-Officer Stringham, my senior officer, and shall await further orders. I am informed by the chief engineer that the ship will be in readiness by 8 a. m. to-morrow to proceed to

me) until a full explanation is offered by Brigadier-General Huger, or the commanding officer at Norfolk.

Respectfully, your obedient servant,

S. H. STRINGHAM,
Flag-Officer, Atlantic Blockading Squadron.

Hon. GIDEON WELLES,
Secretary of Navy.

Report of Flag-Officer Stringham, U. S. Navy, commanding Atlantic Blockading Squadron, requesting transfer of Lieutenant Crosby, U. S. Navy, to Flagship Minnesota.

U. S. S. MINNESOTA,
Hampton Roads, July 8, 1861.

SIR: I beg leave to state to the Department that Mr. Wainwright, who has been doing duty as first lieutenant since the departure of Mr. Werden, finds himself unable to perform the laborious duties of a first lieutenant, especially of the flagship.

I am sorry also to be compelled to state that the second lieutenant, Mr. Gibson, has not sufficient health and strength to supply his place.

On the shore, occupied as harbor master, is Lieutenant Crosby, who, I am induced, from the representations made to me, to request of the Department may be relieved from his present duty and transferred to this ship, allowing Mr. Wainwright to take his place on shore, which duty the latter thinks he can perform.

Respectfully, your obedient servant,

S. H. STRINGHAM,
Flag-Officer, Atlantic Blockading Squadron.

Hon. GIDEON WELLES,
Secretary Navy.

Report of Captain Purviance, U. S. Navy, commanding U. S. ship St. Lawrence, of deficiency in complement of that vessel.

U. S. SHIP ST. LAWRENCE,
Off Cape Henlopen, July 8, 1861.

SIR: The pilot left us at 1 p. m., after a detention of six days in the river, owing to low tides.

We are deficient in lieutenants. The acting masters are perfectly ignorant of duty. We have a fine ship, but at present very inefficient.

I have the honor to be, very respectfully, your obedient servant,

H. Y. PURVIANCE,
Captain.

Hon. GIDEON WELLES,
Secretary of the Navy, Washington, D. C.

Letter from the Secretary of the Navy to Flag-Officer Stringham, U. S. Navy, commanding Atlantic Blockading Squadron, transmitting information from U. S. consul at Liverpool regarding steamer Ernest Mercke.

NAVY DEPARTMENT, *July 8, 1861.*

SIR: Herewith enclosed for your information is a copy of a letter from the honorable Secretary of State, dated the 2d instant, transmit-

ting an extract from a dispatch of the U. S. vice-consul at Liverpool respecting a vessel supposed to be loading at that port for Charleston, S. C.

I am, respectfully, your obedient servant,

GIDEON WELLES.

Flag-Officer S. H. STRINGHAM,
Comdg. Atlantic Blockading Squadron, Hampton Roads, Virginia.

[Enclosure.]

DEPARTMENT OF STATE,
Washington, July 2, 1861.

SIR: I have the honor to enclose herein an extract from dispatch No. 17, dated 7th ultimo, from Henry Wilding, esq., U. S. vice-consul, Liverpool, respecting a vessel, supposed to be loading at that port for Charleston, S. C.

I am, sir, very respectfully, your obedient servant,

WILLIAM H. SEWARD.

Hon. GIDEON WELLES,
Secretary of the Navy.

[Subenclosure.—Extract.]

U. S. CONSULATE, *Liverpool, June 7, 1861.*

SIR: My last dispatch was 31st May, by the *Arabia*.

A statement was made to me on Wednesday by a shipmaster belonging to Portsmouth, N. H., which I consider of consequence enough to report to you.

He stated that on Monday last one of the partners of a large shipping house here remarked during a conversation on the reported raising of the blockade at Charleston, that there was a steamer loading in this country with a valuable cargo for Charleston. He could not get from him where she was loading, or her name, as he seemed to recollect himself and grew uncommunicative, and the captain did not like to appear too inquisitive. The captain would not tell me the name of the house, but from what he did say, I judge it was that of Leech, Harrison & Torwood, a commission house doing a large business with the United States and with numerous Charleston connections, and, on investigating the matter, I find that the owner of the Swedish screw steamer *Ernest Mercke*, which came here, and has just discharged a cargo from New Orleans, has been in frequent communication during the past ten days with that house, and that the chief mate of the vessel has been heard to say he thought she would go back to America.

I am inclined to think the statement referred to her. She is a very fast vessel, having made the passage from New Orleans in twenty-two days, steaming but a small part of the way. She is 700 tons, bark rigged, funnel red at bottom, black at top, hull dark green, spar deck white; female figurehead, no bowsprit. She has no cargo on board yet, but a few days would suffice to load and dispatch her. I am having her looked after.

There is no vessel here, or in any of the ports of the district, loading, that would be likely.

Fraser, Trenholm & Co., the Liverpool branch of John Fraser & Co., of Charleston, have bought a new screw steamer for the "direct trade," but she is not named or ready yet.

* * * * * * *

With high respect, I am, sir, your obedient servant,

HENRY WILDING, *Vice-Consul.*

[Hon. W. H. SEWARD,
Secretary of State.]

General Report of Flag-Officer Stringham, U. S. Navy, commanding Atlantic Blockading Squadron.

U. S. S. MINNESOTA,
Hampton Roads, July 9, 1861.

SIR: I have the honor to inform the Department that the *Roanoke*, Flag-Officer Pendergrast, sailed yesterday for the coast of North Carolina.

The *Cumberland* sailed to-day for Boston, first taking a short cruise down off Cape Hatteras and the coast of North Carolina.

I am informed her sailmaker is now doing duty on board the steam tug *Young America*, at present repairing at Washington. I respectfully suggest, and enquire, whether it would not be well to let him proceed to Boston and prepare matters in his department, thus hastening the necessary work upon the *Cumberland* when she arrives.

I would like to assign an officer to the *Young America*, Mr. G. W. Graves, now applying for the appointment of acting master, for which situation I know him to be fully qualified. He is a very active and efficient officer, having served on board this ship since we sailed as master's mate.

I venture to ask of the Department to send the *Yankee* to this point. The Army have constant communication from Fortress Monroe to Newport News in small tug steamers. There is a steamer which comes down from Norfolk to the mouth of Elizabeth River frequently. I fear, emboldened by the absence of our small steamers, she may attack and capture the army steamers. The *Yankee*, drawing light draft of water and being fast, might catch this vessel, besides doing service here as she did before her removal for repairs.

Respectfully, your obedient servant,

S. H. STRINGHAM,
Flag-Officer, Atlantic Blockading Squadron.

Hon. GIDEON WELLES,
Secretary Navy.

Report of Flag-Officer Stringham, U. S. Navy, commanding Atlantic Blockading Squadron, of the readiness of the U. S. Ship Santee for sailing.

U. S. S. MINNESOTA,
Hampton Roads, July 9, 1861.

SIR: I have the honor to inform the Department that the *Santee*, being ready for sea, she might not be detained any longer. I have ordered Lieutenant J. H. Spotts, who was proceeding as passenger on board the *Susquehanna* to the Gulf Squadron, to take passage in the *Santee*, doing duty on board the latter vessel until otherwise ordered.

I have the honor to acknowledge receipt of your letter of July 6, ordering the schooner lately captured to Washington; also countermanding the order respecting the Rodman gun.

Respectfully, your obedient servant,

S. H. STRINGHAM,
Flag-Officer, Atlantic Blockading Squadron.

Hon. GIDEON WELLES,
Secretary Navy.

Letter from the Secretary of the Navy to Flag-Officer Stringham, U. S. Navy, commanding Atlantic Blockading Squadron, transmitting information from U. S. consul at London, regarding the purchase of a steamer by Confederate agents.

NAVY DEPARTMENT, *July 9, 1861.*

SIR: I herewith enclose copy of a letter from the Secretary of State, dated the 5th instant, transmitting copy of dispatch No. 10, received from the U. S. consul at London, concerning the purchase in England of a large steamer by parties in the interest of the State of South Carolina.

I am, respectfully, your obedient servant,

GIDEON WELLES.

Flag-Officer S. H. STRINGHAM,
Comdg. Atlantic Blockading Squadron, Hampton Roads, Virginia.

[Enclosure.]

DEPARTMENT OF STATE,
Washington, July 5, 1861.

SIR: I have the honor to present herewith for your information a copy of a dispatch No. 10, received from the U. S. consul at London, respecting the purchase of a large steamer in England for parties in the interest of the State of South Carolina.

I have the honor to be, sir, your obedient servant,

WM. H. SEWARD.

Hon. GIDEON WELLES,
Secretary of the Navy.

[Subenclosure.]

CONSULATE OF THE UNITED STATES OF AMERICA,
London, June 22, 1861.

SIR: I have just learned from a source I regard as reliable, a mercantile gentleman of this city, that a new screw steamer, of 1,000 tons net burden, built by Mr. Peirce, of Stockton, on the river Tees, for Messrs. Walker and Cunard, has been recently sold to Fraser, Trenholm & Co, of Liverpool and Charleston, S. C.

She is now, as my authority states, taking in cargo for the Southern States, and is nearly ready for sea.

The Tees is near the Scottish border, about 200 miles from London; but I shall try to ascertain her name, the flag under which she will sail, for what port she clears, who commands her, her complement of men, a description of her, and all other accessible facts concerning her. I have this moment had a confirmation of the above statement from a gentleman just arrived from Birmingham [England], who says he had a hint that such a vessel was soon to leave for some Southern port, and that arms were to be sent from Birmingham for the South by her. She is reported as bound for Charleston direct, but this is hardly probable; she may [sail] directly for Mexico or some port in one of the West India Islands, or she may try to get into the Satilla River, or St. Mary's, Ga., Fernandina, St. John's River, or some port on the Atlantic side of Florida. A railroad runs to Fernandina, Fla., and there is water enough at most all of the places above named for a vessel of 1,000 tons to enter with safety.

The old guns I reported as going by the *Golden Fleece* to Quebec, and thence south, were withdrawn from her before she sailed and have not yet been shipped.

As the Government's dispatches went yesterday, and this ship is said to be so nearly ready for sea, I thought it my duty to report her case as far as I have learned it, without delaying for the next steamer.

She may be the steamer alluded to in former dispatches.

I have the honor to be, your obedient servant,

F. H. MORSE,
Consul.

[Hon. W. H. SEWARD,
Secretary of State.]

Letter from the Secretary of the Navy to Flag-Officer Stringham, U. S. Navy, commanding Atlantic Blockading Squadron, acceding to his requests.

NAVY DEPARTMENT, *July 9, 1861.*

SIR: Arrangements will be immediately made to furnish the *Susquehanna* with a new shaft, but, as she will not be required north for two weeks, you will use her to the best of your judgment in enforcing the blockade in the Chesapeake.

Lieutenant Crosby was detailed at the request of General Butler. The Department will make the proposed change if requested, or consented to by the major-general in command there.

U. S. District Attorney Delafield [Smith] will be written to by the Department.

Very respectfully,

GIDEON WELLES.

Flag-Officer S. H. STRINGHAM,
Commanding Atlantic Blockading Squadron.

Report of Lieutenant Parrott, U. S. Navy, commanding U. S. brig Perry, giving names of foreign vessels boarded and warned by that ship.

U. S. BRIG PERRY,
At Sea, July 9, 1861.

SIR: I have the honor to report that on the 6th of June, 1861, we boarded and warned off the coast the English bark *Sea Queen*, from Ascension, bound to Charleston, S. C.

On the 9th of June we boarded the *John Barrow*, of London, from Doboy to Sunderland, with lumber. On the 11th of June we were off Fernandina and set the blockade. On the 15th of June we boarded and warned off the coast the Spanish brig *Juana Teresa*, from Havana, in ballast, and bound for St. Mary's for lumber. On the 18th of June boarded and warned off the coast the English brig *Polka*, from Bermuda, bound to Doboy for lumber. On the 23d of June boarded the Russian bark *Salmi*, from Fernandina, bound to London with a cargo of steam pitch pine. We had observed her at anchor inside the bar for several days. She reported that she left no foreign vessels at Fernandina or St. Mary's.

I am, very respectfully, your obedient servant,

E. G. PARROTT,
Lieutenant, Commanding.

Senior Flag-Officer S. H. STRINGHAM,
U. S. S. Minnesota.

Letter from the Secretary of the Navy to Flag-Officer Stringham, U. S. Navy, commanding Atlantic Blockading Squadron, transmitting information from U. S. consul at London, regarding the purchase of a steamer by Confederate agents.

NAVY DEPARTMENT, *July 9, 1861.*

SIR: I herewith enclose copy of a letter from the Secretary of State, dated the 5th instant, transmitting copy of dispatch No. 10, received from the U. S. consul at London, concerning the purchase in England of a large steamer by parties in the interest of the State of South Carolina.

I am, respectfully, your obedient servant,

GIDEON WELLES.

Flag-Officer S. H. STRINGHAM,
Comdg. Atlantic Blockading Squadron, Hampton Roads, Virginia.

[Enclosure.]

DEPARTMENT OF STATE,
Washington, July 5, 1861.

SIR: I have the honor to present herewith for your information a copy of a dispatch No. 10, received from the U. S. consul at London, respecting the purchase of a large steamer in England for parties in the interest of the State of South Carolina.

I have the honor to be, sir, your obedient servant,

WM. H. SEWARD.

Hon. GIDEON WELLES,
Secretary of the Navy.

[Subenclosure.]

CONSULATE OF THE UNITED STATES OF AMERICA,
London, June 22, 1861.

SIR: I have just learned from a source I regard as reliable, a mercantile gentleman of this city, that a new screw steamer, of 1,000 tons net burden, built by Mr. Peirce, of Stockton, on the river Tees, for Messrs. Walker and Cunard, has been recently sold to Fraser, Trenholm & Co, of Liverpool and Charleston, S. C.

She is now, as my authority states, taking in cargo for the Southern States, and is nearly ready for sea.

The Tees is near the Scottish border, about 200 miles from London; but I shall try to ascertain her name, the flag under which she will sail, for what port she clears, who commands her, her complement of men, a description of her, and all other accessible facts concerning her. I have this moment had a confirmation of the above statement from a gentleman just arrived from Birmingham [England], who says he had a hint that such a vessel was soon to leave for some Southern port, and that arms were to be sent from Birmingham for the South by her. She is reported as bound for Charleston direct, but this is hardly probable; she may [sail] directly for Mexico or some port in one of the West India Islands, or she may try to get into the Satilla River, or St. Mary's, Ga., Fernandina, St. John's River, or some port on the Atlantic side of Florida. A railroad runs to Fernandina, Fla., and there is water enough at most all of the places above named for a vessel of 1,000 tons to enter with safety.

The old guns I reported as going by the *Golden Fleece* to Quebec, and thence south, were withdrawn from her before she sailed and have not yet been shipped.

I have the honor to acknowledge receipt of your letter of July 8, containing, enclosed from the honorable Secretary of State, an extract from communication of vice-consul at Liverpool; also your letter of same date concerning steamer *Yankee*. Also a letter from the Department to Captain John Marston, containing the very extraordinary letter of Paymaster Cramer Burt to Hiram Barney, collector at New York. I shall forward these letters to Captain William L. Hudson, at Boston, to await the arrival of the *Cumberland* at that point.

Respectfully, your obedient servant,

S. H. STRINGHAM,
Flag-Officer, Atlantic Blockading Squadron.

Hon. GIDEON WELLES,
Secretary of Navy.

Report of Captain Mercer, U. S. Navy, commanding U. S. S. Wabash regarding the services of the chartered steamer Union off Charleston, S. C.

U. S. STEAM FRIGATE WABASH,
Off Charleston, July 10, 1861.

SIR: The *Union* is still here, and has been very serviceable to me. Indeed, I do not know how I should get along without her or some other vessel of her speed and class. One vessel at least, a Spaniard, would have gotten into this place in spite of Lee and myself, if the *Union* had not been with us. In your communication to me by the *Union*, you say nothing to me about her return to Hampton Roads before the expiration of her charter, whereas Goldsborough tells me you informed him that she would not be rechartered. Notwithstanding this, however, I shall detain her here as long as I can supply her with coal without getting too low myself, or until some other small steamer shall come here to relieve her. Under the guns of this ship she does not consume more than a ton a day, and does not use more than Sartori did in the *Flag* when steaming. On the arrival of the *Union* here she had on board about 60 tons. I have supplied her with 15 tons of coal since, and she now has about 60 tons on board.

I have Master's Mate Cushing on board here, who is ordered to the *Minnesota*, whom I would send to you by the *Perry*, but I know these small vessels have no room to spare, and I shall hold on to him for a better opportunity. This ship can remain here two weeks longer, when her coal will be getting rather low.

I hope the Government will send us a couple of small steamers to this point.

I have the honor to be, sir, respectfully, yours,

SAML. MERCER, *Captain.*

Flag-Officer SILAS H. STRINGHAM,
Commanding U. S. Blockading Squadron, Atlantic Coast.

Letter from the Secretary of the Navy to Flag-Officer Stringham, U. S. Navy, commanding Atlantic Blockading Squadron, transmitting information from St. John, New Brunswick, regarding the ship Alliance suspected of carrying arms for the Confederate Government.

NAVY DEPARTMENT, *July 10, 1861.*

SIR: Herewith enclosed is a copy of a letter from J. C. Peterson, esq., dated St. John, New Brunswick, July 3, in relation to a vessel in

that port called the *Alliance*, which is suspected of being a pirate, or having arms on board for the rebel States.

I am, respectfully, your obedient servant,

GIDEON WELLES.

Flag-Officer S. H. STRINGHAM,
Comdg. Atlantic Blockading Squadron, Hampton Roads, Virginia.

[Enclosure.]

ST. JOHN, NEW BRUNSWICK, *July 3, 1861*

MY DEAR SIR: There is in this port a vessel of some 700 tons, the *Alliance*, which is, I have every reason to suspect, a Southern pirate.

The stern has the arms of South Carolina blacked over; her hull is rather old, but her spars, running and standing rigging, new and taut. Her master is a red-hot secessionist, and on Sunday week last hoisted the Palmetto flag, which created no little excitement among the American ships, they all hauling down their national flags.

She cleared from Liverpool for Charleston, loaded (so said) with railroad iron. She was overhauled while endeavoring to run the blockade and ordered off.

She then went into New York, where suspicion was excited as to the contents of her hold, and she at once left for this port and arrived here some two weeks since.

She has a British register and is reported to be owned in Liverpool, New York, and Charleston.

Her agents here are very much opposed to the North.

I have endeavored to board her, but was not permitted to do so; no one has permission to see her hold, and there are other circumstances [which] warrant me in my conclusions.

I thought it proper to write to you on the subject, as being the only person in Washington with whom I have any acquaintance. If you think it worth the while, you may hand this note to the proper officers. Any further information as to her movements which I can transmit, either by letter or telegraph, I will be happy to give, if desired, as I love my country, and would like to know that this vessel, which I believe is loaded with cannon and munitions of war, was captured.

Very respectfully, your obedient servant,

J. C. PETERSON.

Hon. H. HAMLIN,
Washington.

Letter from the Secretary of the Navy to Flag-Officer Stringham, U. S. Navy, commanding Atlantic Blockading Squadron, transmitting information from the U. S. consul at Liverpool, regarding shipment of arms from that port.

NAVY DEPARTMENT, *July 10, 1861.*

SIR: Transmitted herewith for your information are extracts from a dispatch received by the Secretary of State from the U. S. vice-consul at Liverpool relative to the shipment of arms from England, which it is suspected are intended for the insurrectionary States.

I am, respectfully, your obedient servant,

GIDEON WELLES.

Flag-Officer S. H. STRINGHAM,
Comdg. Atlantic Blockading Squadron, Hampton Roads, Virginia.

[Enclosure.—Extract.]

U. S. CONSULATE,
Liverpool, June 21, 1861.

SIR: * * * Shipments of arms by the screw steamers for New York continue, but I do not hear of any to other ports of the United States or ports adjacent, except Vera Cruz, in Mexico; Ceara, in Brazil, and Halifax, Nova Scotia.

The English ship *John Parkinson* sailed a few days since for Vera Cruz with several packages containing arms, but entered as hardware; and another vessel, loading for the same place, is taking several similar packages. The English bark *Ariel*, which cleared 17th June for Ceara, had on board the following contraband articles: Ten cases, 12 quarter boxes, and 300 quarter barrels gunpowder; 26 hundredweight shot lead; 76 cases lead shot; 3 casks, 12 barrels saltpeter; 3 casks, 1 barrel sulphur, besides 167 packages entered as hardware and 63 hundredweight castings. She has a black hull and white ports.

The *Thomas Killam*, for Halifax yesterday, had 13 cases of firearms.

* * * * * * *

There are here several vessels belonging to New Orleans. I have been told that the captains are instructed by their owners to return to New Orleans. One, the *Picayune*, was entered yesterday to load for there. I shall refuse to certify her clearance, but, as the law stands, I do not think I can refuse to return her register. As there will likely be time for you to reply before she clears, I shall be glad if you will have me advised on the subject.

* * * * * * *

With high respect, I am, your obedient servant,

H. WILDING.

[Hon. W. H. SEWARD, *Secretary of State.*]

Order from the Secretary of the Navy to Flag-Officer Stringham, U. S. Navy, commanding Atlantic Blockading Squadron, regarding the U. S. S. Seminole.

NAVY DEPARTMENT, *July 10, 1861.*

SIR: The steam sloop *Seminole*, Commander Edward R. Thomson, now at Philadelphia, is to be attached to the Atlantic Blockading Squadron. She will be ready for sea on Monday next.

Such instructions as you propose giving her you will please send to the Department, which will forward them to Commander Thomson. This will obviate the necessity of the vessel touching at Hampton Roads for orders, unless you desire her services there.

I am, respectfully, your obedient servant,

GIDEON WELLES.

Flag-Officer S. H. STRINGHAM,
Comdg. Atlantic Blockading Squadron, Hampton Roads.

Letter from the Secretary of the Navy to Flag-Officer Stringham, U. S. Navy, commanding Atlantic Blockading Squadron, expressing approval of his purpose to hold no further communication with the enemy.

NAVY DEPARTMENT, *July 11, 1861.*

SIR: I have received your No. 57* of the 8th instant, relating principally to the firing on the flag of truce sent up to Norfolk for Miss Segar.

---

*See p. 774.

The Department approves of your purpose to hold no further communication with the enemy unless a satisfactory explanation of the circumstance is afforded.

The Department approves of your ordering Lieutenant Spotts to the *Sabine* [*Santee*] in place of Lieutenant Harrell. It would enquire, however, whether Lieutenant Mitchell also went out in that vessel. If so, she had more than the complement assigned to her. The Department declined to increase, on an application made by Captain Eagle.

I am, respectfully, your obedient servant,

GIDEON WELLES.

Flag-Officer S. H. STRINGHAM,
Comdg. Atlantic Blockading Squadron, Hampton Roads, Virginia.

Report of Flag-Officer Stringham, U. S. Navy, commanding Atlantic Blockading Squadron, regarding capture of the brig Amy Warwick.

U. S. S. MINNESOTA,
Hampton Roads, July 11, 1861.

SIR: I have the honor to acknowledge receipt of your letter of July 8, containing extracts from dispatch of the American consul at London; also of July 10, containing extracts from dispatch of the American consul at Liverpool.

I have the honor also to inform the Department of the capture at this point yesterday of the brig *Amy Warwick*, from Rio de Janeiro, loaded with coffee, and owned in Richmond, Va.

I have, according to instructions from the Department, ordered her to Boston. She will sail to-day in charge of Acting Master J. B. Gordon.

Respectfully, your obedient servant,

S. H. STRINGHAM,
Flag-Officer, Atlantic Blockading Squadron.

Hon. GIDEON WELLES.

Report of Captain Purviance, U. S. Navy, commanding U. S. ship St Lawrence, of the arrival of that vessel in Hampton Roads.

U. S. SHIP ST. LAWRENCE, *July* [*11*], *1861.*

SIR: I have the honor to report the arrival of the U. S. ship *St. Lawrence*, under my command, three days from Philadelphia.

Very respectfully, your obedient servant,

H. Y. PURVIANCE,
Captain.

Flag-Officer S. [H.] STRINGHAM,
Commanding U. S. Blockading Squadron.

Report of Commander Livingston, U. S. Navy, commanding U. S. S. Penguin, of the cruise of that vessel from July 8 to 11, 1861.

U. S. S. PENGUIN,
Hampton Roads, July 11, 1861.

SIR: In pursuance of your verbal orders of the 8th instant, I got underway at 11 o'clock, a. m. of same date, communicated with Commander Chandler in the mouth of York River, delivered his letter and

your instructions. The *Dawn's* position was so close as to effectually close the mouth of the river and the approach by Mobjack Bay, proceeded on to the Rappahannock and arrived there at 10 p. m., delivered the pilot, letter, and your message to the commander of the *Mount Vernon*. He had nothing to communicate of any importance; had seen no vessels nor learned any news. I anchored for the night, and in the morning at 3 a. m. got underway; could then distinctly hear the drums of the enemy on shore; from our pilot's representations the Patuxent is a rendezvous for law breakers. I was induced to visit it. I ran into the mouth of the river at 4 p. m. of the 9th instant (having boarded and spoken all vessels on my way). At 5 p. m. a steamer hove in sight and boarded some vessels outside. Her movement being unusual, I ran for her, brought her to, and sent a boat with Lieutenant Budd to make enquiries. I found her to be the steamer *Chester*, of and from Baltimore, with a detachment of 40 Massachusetts and 40 Pennsylvania armed troops, with a brass artillery piece on board, all under charge of a provost-marshal, of Baltimore, who had been dispatched here by General Banks to search for the schooner *Georgiana* that was reported to have left Baltimore with 40 armed secessionists or pirates, who were to go to the Patuxent, and there await the arrival of the *Mary Washington*, which was to bring them two heavy guns. And further, that General Banks had prohibited the sailing of all vessels from Baltimore on that day, until meridian, the *Mary Washington* included.

The *Georgiana* was described as a large, high-decked schooner, green bottom, red stripe; there is also a small vessel of that name in the Chesapeake.

Discovering a schooner in the offing, I chased her 20 miles and found her to be a Staten Island vessel, bound to New York. On my return to the river the *Chester* had gone to Baltimore.

I was engaged until after dark overhauling vessels in the Chesapeake. I then anchored in the mouth of the Patuxent. Before anchoring I brought to the steamer *George Weems*, from Baltimore, bound up the Patuxent with passengers. I boarded him and questioned him closely, as he is owned by the same owner as the *Mary Washington*. His report agreed with that of the *Chester*, adding that General Banks had allowed him to leave at 10 a. m. in accommodation to his passengers.

At early dawn I weighed and stood a short distance up the river, examining vessels, and sent a boat ashore for news. Obtained nothing satisfactory, except that a pirate was thought to be about somewhere.

At 6 a. m. discovered two steamers standing in; weighed and stood for them; they proved to be the U. S. steamers *Freeborn*, Lieutenant Commanding Lowry, and the *Resolute*. The former came on board and gave me the following intelligence: He had been dispatched by Commander Rowan, of the *Pawnee*, to look after a suspected piratical party in a small vessel which intended to capture the *George Weems*. This suspicion was founded on the following: Lieutenant Commanding Lowry had visited Point Lookout, and was informed by the woman who keeps the light at that place that on Sunday last a small vessel, called a pungy, landed there the crew of the vessel lately captured by the *St. Nicholas*, and that one of the party she recognized as Thomas by a scar on his face. This so-called Captain Thomas has since been taken in Baltimore and is now a prisoner in Fort McHenry. She also stated that from the conversation she overheard she inferred that they had some plan to intercept and capture the steamer *George Weems*. Upon this information Captain Rowan had dispatched the *Freeborn* and

The Department approves of your purpose to hold no further communication with the enemy unless a satisfactory explanation of the circumstances is afforded.

The Department approves of your ordering Lieutenant Spotts to the *Saint Louis* in place of Lieutenant Harrell. It would enquire, however, whether Lieutenant Mitchell also went out in that vessel. If so, she had more than the complement assigned to her. The Department declined to increase, on an application made by Captain Eagle.

I am, respectfully, your obedient servant.

GIDEON WELLES.

Flag-Officer S. H. STRINGHAM,
Comdg. Atlantic Blockading Squadron, Hampton Roads, Virginia.

Report of Flag-Officer Stringham, U. S. Navy, commanding Atlantic Blockading Squadron, regarding capture of the brig Amy Warwick.

U. S. S. MINNESOTA,
Hampton Roads, July 11, 1861.

SIR: I have the honor to acknowledge receipt of your letter of July 3, containing extracts from dispatch of the American consul at London; also of July 10, containing extracts from dispatch of the American consul at Liverpool.

I have the honor also to inform the Department of the capture at this point yesterday of the brig *Amy Warwick*, from Rio de Janeiro, loaded with coffee, and owned in Richmond, Va.

I have, according to instructions from the Department, ordered her to Boston. She will sail to-day in charge of Acting Master J. B. Gordon.

Respectfully, your obedient servant.

S. H. STRINGHAM,
Flag-Officer, Atlantic Blockading Squadron.

Hon. GIDEON WELLES.

Report of Captain Purviance, U. S. Navy, commanding U. S. ship St Lawrence, of the arrival of that vessel in Hampton Roads.

U. S. SHIP ST. LAWRENCE, *July 11, 1861.*

SIR: I have the honor to report the arrival of the U. S. ship *St. Lawrence*, under my command, three days from Philadelphia.

Very respectfully, your obedient servant.

H. Y. PURVIANCE,
Captain.

Flag-Officer S. H. STRINGHAM,
Commanding U. S. Blockading Squadron.

Report of Commander Livingston, U. S. Navy, commanding U. S. S. Penguin, of the cruise of that vessel from July 5 to 11, 1861.

U. S. S. PENGUIN,
Hampton Roads, July 11, 1861.

SIR: In pursuance of your verbal orders of the 8th instant, I got underway at 11 o'clock, a. m. of same date, communicated with Commander Chandler in the mouth of York River, delivered his letter and

your instructions. The *Dawn's* position was so close as to effectually close the mouth of the river and the approach by Mobjack Bay, proceeded on to the Rappahannock and arrived there at 10 p. m., delivered the pilot, letter, and your message to the commander of the *Mount Vernon*. He had nothing to communicate of any importance; had seen no vessels nor learned any news. I anchored for the night, and in the morning at 3 a. m. got underway; could then distinctly hear the drums of the enemy on shore; from our pilot's representations the Patuxent is a rendezvous for law breakers. I was induced to visit it. I ran into the mouth of the river at 4 p. m. of the 9th instant (having boarded and spoken all vessels on my way). At 5 p. m. a steamer hove in sight and boarded some vessels outside. Her movement being unusual, I ran for her, brought her to, and sent a boat with Lieutenant Budd to make enquiries. I found her to be the steamer *Chester*, of and from Baltimore, with a detachment of 40 Massachusetts and 40 Pennsylvania armed troops, with a brass artillery piece on board, all under charge of a provost-marshal, of Baltimore, who had been dispatched here by General Banks to search for the schooner *Georgiana* that was reported to have left Baltimore with 40 armed secessionists or pirates, who were to go to the Patuxent, and there await the arrival of the *Mary Washington*, which was to bring them two heavy guns. And further, that General Banks had prohibited the sailing of all vessels from Baltimore on that day, until meridian, the *Mary Washington* included.

The *Georgiana* was described as a large, high-decked schooner, green bottom, red stripe; there is also a small vessel of that name in the Chesapeake.

Discovering a schooner in the offing, I chased her 20 miles and found her to be a Staten Island vessel, bound to New York. On my return to the river the *Chester* had gone to Baltimore.

I was engaged until after dark overhauling vessels in the Chesapeake. I then anchored in the mouth of the Patuxent. Before anchoring I brought to the steamer *George Weems*, from Baltimore, bound up the Patuxent with passengers. I boarded him and questioned him closely, as he is owned by the same owner as the *Mary Washington*. His report agreed with that of the *Chester*, adding that General Banks had allowed him to leave at 10 a. m. in accommodation to his passengers.

At early dawn I weighed and stood a short distance up the river, examining vessels, and sent a boat ashore for news. Obtained nothing satisfactory, except that a pirate was thought to be about somewhere.

At 6 a. m. discovered two steamers standing in; weighed and stood for them; they proved to be the U. S. steamers *Freeborn*, Lieutenant Commanding Lowry, and the *Resolute*. The former came on board and gave me the following intelligence: He had been dispatched by Commander Rowan, of the *Pawnee*, to look after a suspected piratical party in a small vessel which intended to capture the *George Weems*. This suspicion was founded on the following: Lieutenant Commanding Lowry had visited Point Lookout, and was informed by the woman who keeps the light at that place that on Sunday last a small vessel, called a pungy, landed there the crew of the vessel lately captured by the *St. Nicholas*, and that one of the party she recognized as Thomas by a scar on his face. This so-called Captain Thomas has since been taken in Baltimore and is now a prisoner in Fort McHenry. She also stated that from the conversation she overheard she inferred that they had some plan to intercept and capture the steamer *George Weems*. Upon this information Captain Rowan had dispatched the *Freeborn* and

Resolute. I informed Lieutenant Commanding Lowry that the said steamer was then up the Patuxent, and would probably be down that day, upon which he concluded to remain in the river to watch her.

On the 10th I ran over to visit Tangier, as the only place not yet visited, to search for the schooner, but met with no success. I examined everything I met.

It is said that the schooner *Georgiana*, first mentioned, belongs in York River, and the steamer in Baltimore, where, if watched, ought to [be] held in control.

I enclose herewith a sketch* of an infernal machine picked up by the *Freeborn* near the *Pawnee*.

On the 11th, at 11 a. m., fell in with American bark *Young Greek*, of Boston, bound to Baltimore from Chile, cargo of copper ore; was aground on the Wolf Trap; asked assistance; took a hawser from him; made an effort to drag him off in vain; at turn of tide left him, taking off the captain.

Very respectfully, sir, your obedient servant,

J. W. LIVINGSTON,
Commanding U. S. S. Penguin.

Flag-Officer SILAS H. STRINGHAM,
Comdg. Atlantic Blockading Squadron, Hampton Roads, Virginia.

Letter from the Secretary of the Navy to Flag-Officer Stringham, U. S. Navy, commanding Atlantic Blockading Squadron, requesting an expression of opinion regarding the blocking of harbor channels with stone.

NAVY DEPARTMENT, *July 11, 1861.*

SIR: It is proposed by this Department to sink vessels in all, or nearly all, the channels opening into the harbors within the jurisdiction of your command, commencing at the first inlet south of the Chesapeake, unless that one shall be left open for light-draft vessels to get into Albemarle Sound and cut off that very important line of communication. A board of distinguished persons are now investigating this subject, and their report will be forwarded to you. Should the work go forward, the Department will buy vessels loaded with stone, to be delivered to you at Hampton Roads, with such steamers to assist as may be necessary. Your views with regard to this subject, particularly the latter part, are invited before the contracts are completed.

Very respectfully, etc.,

GIDEON WELLES.

Flag-Officer S. H. STRINGHAM,
Comdg. Atlantic Blockading Squadron, Hampton Roads, Virginia.

Report of Flag-Officer Stringham, U. S. Navy, commanding Atlantic Blockading Squadron, regarding the U. S. S. Seminole.

U. S. FLAGSHIP MINNESOTA,
Hampton Roads, July 12, 1861.

SIR: I have the honor to acknowledge the receipt of your letter of the 10th instant, in relation to the *Seminole*.

---

* See Vol. 4, p. 568.

As Fernandina is an important point, I contemplate sending the *Seminole* there; but I would suggest that Commander Thomson be directed to report to me at this place, as I have dispatches and letters for the vessels off the several ports on the coast, which I would like to send by him.

Very respectfully, your obedient servant,

S. H. STRINGHAM,
Flag-Officer, Commanding Altantic Blockading Squadron.

Hon. GIDEON WELLES,
Secretary of the Navy, Washington, D. C.

Letter from the Secretary of the Navy to Flag-Officer Stringham, U. S. Navy, commanding Atlantic Blockading Squadron, transmitting telegrams regarding depredations of Confederate privateer Jefferson Davis.

Confidential.] NAVY DEPARTMENT, *July 12, 1861.*

SIR: The two following telegrams have just been received at this Department, and such is the importance attached to them that an officer will be dispatched this evening to carry them to you. Action in regard to the matter will be left to your discretion. The Department will dispatch vessels from New York in search of her reported position.

Very respectfully, etc.,

GIDEON WELLES.

Flag-Officer S. H. STRINGHAM,
Commanding Atlantic Blockading Squadron.

[Enclosure 1.]

NEWPORT, *July 12, 1861.*

Arrived a brig from Bangor with part of crew of brig *John Welsh*, from Trinidad, sugar, for Falmouth [England]. Was taken by privateer *Jefferson Davis* off Hatteras on Saturday last. Captain Fifield, of brig *John Welsh*, was put on board ship *John Goodwin*, of and from New York for Montevideo, which vessel had been ransacked and was allowed to proceed on account of her heavy draft of water. Same privateer took the schooner *J. C. Warner* [*S. J. Waring?*], of New York, and a brig. The privateer was 100 miles southeast of Nantucket Shoals.

T. & J. COGGESHALL,
Agents Board Underwriters.

[Enclosure 2.]

NEWPORT, *July 12.*

Postell, formerly of U. S. Navy, is in command of the *Jefferson Davis*, and his orders to the prize master were to take the three vessels into some port of Florida, or near Savannah.

T. & J. COGGESHALL,
Agents Board Underwriters.

Report of Commander Glisson, U. S. Navy, commanding U. S. S. Mount Vernon, of affairs in the Rappahannock River.

U. S. S. MOUNT VERNON,
Rappahannock, July 13, 1861.

SIR: I have to report all quiet at this place; no vessels have attempted to pass in or out since our arrival off the entrance of the river.

[illegible] Everything seemed so peaceful that it was difficult to imagine that we are at war with the people of Virginia. The health of the officers and crew is good.

I am, sir, very respectfully, your obedient servant,

[illegible],
Commander, U. S. Navy.

Flag-Officer [illegible] STRINGHAM,
Commanding Atlantic Blockading Squadron, etc.

Report of Flag-Officer Stringham, U. S. Navy, commanding Atlantic Blockading Squadron, acknowledging receipt of Department's communications.

U. S. S. MINNESOTA,
Hampton Roads, July [illegible], 1861.

SIR: I have the honor to inform the Department of the receipt of your letter of July [illegible], referring to transfer of [illegible] of [illegible] to [illegible]. One of same date that [illegible] may remain two weeks [illegible] and [illegible] to Lieutenant [illegible]; also your letter of July [illegible], with copy of letter from [illegible], New [illegible], and of July [illegible], [illegible] to Lieutenant [illegible], who was ordered to [illegible] duty on board the *Santee* only, until otherwise ordered, as I did not know [illegible] that the Department had other duties for him on arriving at the Gulf.

Lieutenant [illegible] was ordered to the *Santee*, and sailed in her. Carpenter [illegible] also sailed in her as passenger.

Respectfully, your obedient servant,

S. H. STRINGHAM,
Flag-Officer, Atlantic Blockading Squadron.

Hon. GIDEON WELLES,
Secretary of Navy.

Report of Flag-Officer Stringham, U. S. Navy, commanding Atlantic Blockading Squadron, transmitting enclosures regarding chartered steamer Monticello.

U. S. S. MINNESOTA,
Hampton Roads, July 13, 1861.

SIR: I have the honor herewith to enclose reports of Commander J. P. Gillis, also of Lieutenant D. L. Braine, with reference to the steamer *Monticello*, now under charter, but shortly to expire.

I respectfully suggest that this vessel be exchanged for a more efficient one, and that the officers and crew be transferred to the latter, instead of waiting the long time necessary to repair the *Monticello*, she evidently requiring very extensive repairing in hull and machinery.

It is absolutely necessary to have a vessel all the time in the mouth of the James River.

Respectfully, your obedient servant,

S. H. STRINGHAM,
Flag-Officer, Atlantic Blockading Squadron.

Hon. GIDEON WELLES,
Secretary of the Navy, Washington, D. C.

[Enclosure.]

U. S. S. MONTICELLO,
Above Newport News, July 11, 1861.

SIR: We moved up with this vessel yesterday afternoon to take a look at Day's Point, in the hope of being able to shell the rebel encampment there. Approaching the shore as near as our draft of water would permit, we found our shell fell short, and returned to our anchorage.

I submit for your consideration and action the accompanying report of Lieutenant Braine in relation to the condition of this vessel and her battery. He has been attached to her during the time of her charter by the Government. The information relative to her engine is furnished by the engineer.

Very respectfully, your obedient servant,

JOHN P. GILLIS,
Commander, U. S. Navy.

Flag-Officer S. H. STRINGHAM,
Commanding Atlantic Blockading Squadron.

[Subenclosure.]

U. S. S. MONTICELLO,
Above Newport News, July 10, 1861.

SIR: As the charter of this vessel, I understand, expires in a few days, I [feel it] my duty to call your attention to the fact that this vessel is not coppered, and I learn that she has not been docked for over twenty-one months. She has now been nearly three months in the waters of Hampton Roads, and I think will [suffer] serious injury should she not be coppered or receive a coat of metallic paint immediately. Owing to the active part this vessel has taken in cruising, the almost constant use of her guns has injured the pivot carriage to that extent that should it be required for rapid firing I think it would soon be useless. The 10-inch gun is of the old pattern, defective in range, and the 32-pounders of 43 hundredweight mounted aft are upon old carriages that should be replaced by new, or thoroughly repaired. The deck which was laid aft is in a very leaky condition, and already a quantity of provisions have been condemned owing to that fact.

As to the seagoing qualities of this vessel with her present battery, she is not safe, being in an ordinary sea very wet, and her battery could not be served with accuracy, owning to her rolling badly. In smooth water she will answer as a cruiser.

I would suggest that the pivot gun be replaced by a rifled cannon 40-pounder or less, which will materially increase her efficiency and reduce the weight forward; that her deck aft be immediately calked,

Monday, July 8.—At 8:30 p. m. fired a shell ahead of a bark and hove her to; Lieutenant Scott boarded her; she proved to be the American bark *Young Greek*, from Chile, bound to Baltimore.

Tuesday, July 9.—At 8:45 a .m. made Bodie's light-house on starboard bow; discovered an encampment a few miles north of Bodie's Island light.

In the afternoon, Wednesday, July 10, made Hatteras Inlet and ran in toward it; discovered a battery and a number of wooden houses on the beach, and several small vessels (among which were two light-boats) at anchor inside. Upon nearing the beach, and when about 2½ miles from the battery, it opened fire upon us, all of their shots falling short. The colors were hoisted and we immediately returned the fire with three rounds of shell from forward pivot gun, and two from after pivot gun, and five rounds from rifle howitzers; apparently two shots from rifled cannon took effect.

Friday, July 12.—At 9:45 came to anchor in the mouth of Cape Fear River in 7 fathoms of water. Found the rebel flag flying on Fort Caswell and in the town of Smithville; also a red flag flying on Bald Head light-house. Discovered a rebel battery to the southward of the fort and a number of men drilling on the beach; could count fourteen guns (barbette) on Fort Caswell and several fieldpieces.

Saturday, July 13.—Got underway in the morning. When abreast of Lockwood's [Folly] Inlet, and 10 miles from Smithville, fell in with a schooner. She proved to be the schooner *Mary*, of Washington, N. C.; sand ballast, no cargo; destination unknown; she had evidently been abandoned by her crew upon sighting the *Roanoke*.

We secured such papers as could be found, took from her the foresail, jib and flying jib, blocks, 2 compasses, spyglass, lead line, cooking utensils, and a few other articles; scuttled her and set fire to her.

Sunday, July 14.—At 10:30 came to anchor under sail off Charleston Bar, and found the *Wabash*, *Vandalia*, and *Union* here.

Very respectfully, sir, your obedient servant,

G. J. PENDERGRAST,
Flag-Officer, Commanding West India Squadron.

Flag-Officer SILAS H. STRINGHAM,
Comdg. U. S. Blockading Squadron, Hampton Roads, Virginia.

Report of Flag-Officer Pendergrast, U. S. Navy, commanding West India Squadron, regarding chartered steamer Union.

U. S. FLAGSHIP ROANOKE,
Off Charleston, S. C., July 14, 1861.

SIR: Commander Goldsborough, of the U.S.S. *Union*, having informed me that he was short of coal and that the charter party of his vessel would shortly expire, I have deemed it advisable to order him to Hampton Roads, as she will be nearer the place you intend to assign her.

The *Union* is not very well adapted for this distant station on account of her not carrying sufficient coal.

On her way to Hampton Roads I have directed Commander Goldsborough to show his vessel at the different points between here and there.

Very respectfully, sir, your obedient servant,

G. J. PENDERGRAST,
Flag-Officer, Commanding West India Squadron.

Flag-Officer SILAS H. STRINGHAM,
Commanding U. S. Blockading Squadron.

I respectfully suggest that this vessel be exchanged for a more efficient one, and that the officers and crew be transferred to the latter, instead of waiting the long time necessary to repair the *Monticello*, she evidently requiring very extensive repairing in hull and machinery.

It is absolutely necessary to have a vessel all the time in the mouth of the James River.

Respectfully, your obedient servant,

S. H. STRINGHAM,
Flag-Officer, Atlantic Blockading Squadron.

Hon. GIDEON WELLES,
Secretary of the Navy, Washington, D. C.

[Enclosure.]

U. S. S. MONTICELLO,
Above Newport News, July 11, 1861.

SIR: We moved up with this vessel yesterday afternoon to take a look at Day's Point, in the hope of being able to shell the rebel encampment there. Approaching the shore as near as our draft of water would permit, we found our shell fell short, and returned to our anchorage.

I submit for your consideration and action the accompanying report of Lieutenant Braine in relation to the condition of this vessel and her battery. He has been attached to her during the time of her charter by the Government. The information relative to her engine is furnished by the engineer.

Very respectfully, your obedient servant,

JOHN P. GILLIS,
Commander, U. S. Navy.

Flag-Officer S. H. STRINGHAM,
Commanding Atlantic Blockading Squadron.

[Subenclosure.]

U. S. S. MONTICELLO,
Above Newport News, July 10, 1861.

SIR: As the charter of this vessel, I understand, expires in a few days, I [feel it] my duty to call your attention to the fact that this vessel is not coppered, and I learn that she has not been docked for over twenty-one months. She has now been nearly three months in the waters of Hampton Roads, and I think will [suffer] serious injury should she not be coppered or receive a coat of metallic paint immediately. Owing to the active part this vessel has taken in cruising, the almost constant use of her guns has injured the pivot carriage to that extent that should it be required for rapid firing I think it would soon be useless. The 10-inch gun is of the old pattern, defective in range, and the 32-pounders of 43 hundredweight mounted aft are upon old carriages that should be replaced by new, or thoroughly repaired. The deck which was laid aft is in a very leaky condition, and already a quantity of provisions have been condemned owing to that fact.

As to the seagoing qualities of this vessel with her present battery, she is not safe, being in an ordinary sea very wet, and her battery could not be served with accuracy, owning to her rolling badly. In smooth water she will answer as a cruiser.

I would suggest that the pivot gun be replaced by a rifled cannon 40-pounder or less, which will materially increase her efficiency and reduce the weight forward; that her deck aft be immediately calked,

this place to-day and reports having been captured by a privateer in latitude 39° 16′ N., and longitude 67° 40′ W. A boat and other articles were taken from her, and she was then released. The *M. E. Thompson* was from Bangor, bound to Antigua, but hastened to this port to land four seamen transferred to her from the privateer. One of these seamen, Richard White, formerly a quartermaster on board the U. S. S. *Minnesota*, has just stated to me that while second mate of the brig *John Welsh*, of Philadelphia, bound to Falmouth, England, from Trinidad, his vessel was captured on the 6th instant by the privateer brig *Jefferson Davis* (of Charleston, S. C.), formerly the slave brig *Echo*. She was about ten days out of port, and up to that time had made no captures. She was then about the latitude of Hatteras, but outside the Gulf Stream. The next day the schooner *J. C. Warner* [*S. J. Waring?*], Captain Smith, bound to Montevideo, was captured, and on the 8th the schooner *Enchantress*, of Newburyport, from Boston for Santiago, shared the same fate. On the 9th the ship *Mary Goodell*, of New York, for Buenos Ayres, was seized, water and provisions were taken from her, and five of her crew voluntarily joined the privateer. She was then released and proceeded on her voyage. Upon the same day the brig *Mary E. Thompson*, of Searsport, Captain Havener, from Bangor for Antigua, was seized. Four prisoners, among them my informant White, were placed on board, and she also was released. I am further informed that the privateer was armed with four light carronades and one old long 32-pounder on a pivot amidships; that she carried about sixty-five men, of whom very few were sailors; that the captain appeared to be a Dutchman, and that the chief officer was named Postell, and said that he had formerly been in the Navy. My informant, White, listened carefully to the conversation around him, and is of opinion that the privateer's officers intended to sail to the southward and, after cruising near the Bahamas, to go into port somewhere on the coast of Florida. Prize crews were put on board the brig *John Welsh* and the schooners *J. C. Warner* [*S. J. Waring?*] and *Enchantress*, and they stood to the southward. The port of Beaufort was mentioned in this connection.

The *Jefferson Davis* was a full-rigged brig, with black mastheads and yards and a black hull. She was very rusty, and her pivot gun was visible above the rail.

I have the honor to be, very respectfully, your obedient servant,

C. R. P. RODGERS,
Commandant of Midshipmen.

Hon. GIDEON WELLES,
Secretary of the Navy, Washington, D. C.

JULY 13, 1861.

The *Jefferson Davis*, privateer, was formerly the slaver *Echo*. She left Charleston about fifteen days since and passed out in the night, besides which there are now three privateers, schooner rigged, fitting out at Charleston, also the steamer *Gordon*, and they were all ready or nearly ready for sea. We further learn that within a few days a schooner laden with rice has passed the bar, bound to New Orleans; another schooner was loading for Havana with a cargo of rice. This business should be stopped, and we would suggest that a fast steamer, under the direction of an experienced captain, one well acquainted with the channels, should be dispatched at once and lie as near the bar as possible every night, by which means these privateers and schooners can all be captured on their return.

This information is direct from a person who was in Charleston Tuesday, the 9th instant.

Report of Flag-Officer Pendergrast, U. S. Navy, commanding West India Squadron, urging the necessity of small steamers on the coast of North Carolina.

U. S. FLAGSHIP ROANOKE,
Off Charleston, S. C., July 15, 1861.

SIR: I have the honor to inform you that it is very necessary that two or three more small steamers should be stationed along the coast of North Carolina. It being necessary to send the *Union* to Hampton Roads it leaves but one small vessel here.

I have not as yet learned of the arrival of the *Daylight* and *Albatross* on the coast.

I may visit Savannah, Ga., before returning North.

I regret to inform you that thus far the engines of the ship have not worked satisfactorily, and I feel some anxiety about it.

Very respectfully, your obedient servant,

G. J. PENDERGRAST,
Flag-Officer, Commanding West India Squadron.

Flag-Officer SILAS H. STRINGHAM,
Commanding U. S. Blockading Squadron, Hampton Roads.

Order of the Secretary of the Navy to Flag-Officer Stringham, U. S. Navy, commanding Atlantic Blockading Squadron, regarding U. S. S. Susquehanna.

NAVY DEPARTMENT, *July 15, 1861.*

SIR: You will please send the steam sloop *Susquehanna* to the Philadelphia navy yard, with as little delay as practicable. On her arrival she will be placed at the service of Messrs. Merrick & Sons, for renewing the broken shaft and doing whatever other incidental repairs may be required by the machinery.

I am, respectfully, your obedient servant,

GIDEON WELLES.

Flag-Officer S. H. STRINGHAM,
Commanding Atlantic Blockading Squadron.

Letter from the Secretary of the Navy to Flag-Officer Stringham, U. S. Navy, commanding Atlantic Blockading Squadron, transmitting report of depredations committed by the Confederate privateer Jefferson Davis.

NAVY DEPARTMENT, *July 15, 1861.*

SIR: I herewith enclose for your information a copy of a report received by the Department from Lieutenant C. R. P. Rodgers, Naval Academy, Newport [R. I.], in reference to a privateer, the *Jefferson Davis*, which it appears has made several captures on our coast.

I am, respectfully, your obedient servant,

GIDEON WELLES.

Flag-Officer S. H. STRINGHAM,
Comdg. Atlantic Blockading Squadron, Hampton Roads, Virginia.

[Enclosures.]

U. S. NAVAL ACADEMY,
Newport, July 12, 1861.

SIR: I have the honor to report for the information of the Navy Department that the brig *Mary E. Thompson*, of Searsport, arrived at

CONFEDERATE REPORTS AND CORRESPONDENCE.

Proclamation by the President of the Confederate States of America, regarding letters of marque, April 17, 1861.

Whereas Abraham Lincoln, the President of the United States, has by proclamation announced the intention of invading this Confederacy with an armed force for the purpose of capturing its fortresses and thereby subverting its independence and subjecting the free people thereof to the dominion of a foreign power; and

Whereas it has thus become the duty of this Government to repel the threatened invasion and to defend the rights and liberties of the people by all the means which the laws of nations and the usages of civilized warfare place at its disposal:

Now, therefore, I, Jefferson Davis, President of the Confederate States of America, do issue this my proclamation inviting all those who may desire, by service in private armed vessels on the high seas, to aid this Government in resisting so wanton and wicked an aggression, to make application for commissions or letters of marque and reprisal to be issued under the seal of the Confederate States.

And I do further notify all persons applying for letters of marque to make a statement in writing giving the name and a suitable description of the character, tonnage, and force of the vessel, and the name and place of residence of each owner concerned therein and the intended number of the crew, and to sign said statement and deliver the same to the Secretary of State, or to the collector of any port of entry of these Confederate States, to be by him transmitted to the Secretary of State.

And I do further notify all applicants aforesaid that before any commission or letter of marque is issued to any vessel the owner or owners thereof and the commander for the time being will be required to give bond to the Confederate States with at least two responsible sureties not interested in such vessel in the penal sum of $5,000; or if such vessel be provided with more than 150 men, then in the penal sum of $10,000, with condition that the owners, officers, and crew who shall be employed on board such commissioned vessel shall observe the laws of these Confederate States and the instructions given to them for the regulation of their conduct; that they shall satisfy all damages done contrary to the tenor thereof by such vessel during her commission, and deliver up the same when revoked by the President of the Confederate States.

And I do further specially enjoin on all persons holding offices, civil and military, under the authority of the Confederate States that they be vigilant and zealous in discharging the duties incident thereto.

And I do moreover solemnly exhort the good people of these Confederate States, as they love their country, as they prize the blessings of free government, as they feel the wrongs of the past and those now threatened in aggravated form, by those whose enmity is the more implacable because unprovoked, that they exert themselves in preserving order, in promoting concord, in maintaining the authority and efficacy of the laws, and in supporting and invigorating all the measures which may be adopted for the common defense, and by which, under the blessing of Divine Providence, we may hope for a speedy, just, and honorable peace.

In testimony whereof I have hereunto set my hand and caused the seal of the Confederate States to be affixed this 17th day of April, A. D. 1861.

[SEAL.*] JEFFERSON DAVIS.

By the President:
R. TOOMBS,
Secretary of State.

Order from the governor of Virginia to Commander Tucker, Virginia navy, to assume command in James River.

RICHMOND, VA., *April 22, 1861.*

SIR: You will conduct the naval defenses of James River, cooperating with the general officer in command of the land forces in that district.

Very respectfully, your obedient servant,

JOHN LETCHER.

JOHN R. TUCKER,
Virginia Navy, Norfolk, Va.

Order of the governor of Virginia to Commander Tucker, Virginia navy, commanding in James River, regarding vessels seized for the defense of the State.

EXECUTIVE DEPARTMENT,
Richmond, April 23, 1861.

SIR: You are ordered to inspect all vessels which have been seized by authority of the governor in James River or any of its tributaries; to cause a valuation and assessment of damages to be made of such vessels and their cargoes as may be absolutely necessary to be detained for the defense of the State; to take immediate measures for the preservation of such vessels and cargoes as may not be discharged, and to discharge all such as are not essential to be retained and to give certificates to the officers and crew for their pay from the time of detention until discharged, such certificates to be sent to the Executive Department, upon which warrants will be issued to the auditor for payment.

By order of the governor:

GEORGE W. MUNFORD.

Captain JOHN R. TUCKER,
Navy of Virginia.

Order of the Chief of the Office of Naval Detail and Equipment to Commander Tucker, Virginia navy, commanding in James River.

OFFICE OF NAVAL DETAIL AND EQUIPMENT,
Richmond, Va., May 3, 1861.

SIR: You will detain the steamer *Jamestown.*

By order of Major-General Lee:

Respectfully, etc.,

S. BARRON,
Captain, in Charge.

Commander JNO. R. TUCKER,
Virginia Navy, Richmond, Va.

---

*For seal, see p. 693.

Order of the commandant navy yard, Norfolk, Va., to Commander Page, Virginia navy, regarding guns and equipment for Craney Island, Virginia.

NAVY YARD, GOSPORT [NORFOLK], *May 14, 1861.*

SIR: You will deliver as soon as possible to Lieutenant Fitzgerald, for Craney Island, seven IX-inch Dahlgren guns, carriages and equipments complete, and two 32-pounders, 57 cwt., carriages complete, etc.

Respectfully, etc.,

F. FORREST,
Commandant.

Capt. R. L. PAGE,
Inspector Ordnance, Navy Yard, Gosport.

Order of the commandant navy yard, Norfolk, Va., to Commander Page, Virginia navy, regarding guns and equipment for the C. S. S. Yorktown.

NAVY YARD, GOSPORT [NORFOLK], *May 15, 1861.*

SIR: Please have the carriages for six 8-inch guns of 63 cwt. made first, and cause them, with the six guns and equipments complete, to be forwarded to Richmond as early as practicable, for the *Yorktown.*

You will also have two IX-inch guns and carriages and two 32-pounders of 27 cwt. and carriages, with equipments complete, to be sent after the order for the 8-inch carriage has been complied with.

The pivot carriages for the one XI-inch and one X-inch guns may be commenced, and you are desired to have them completed as early as possible. I have an order for 8-inch shells fitted and fused for the six guns to be mounted on the *Yorktown* (thirty each). Can you supply them?

Respectfully,

F. FORREST,
Commandant.

Commander R. L. PAGE,
Inspector Ordnance, Navy Yard, Gosport.

Order of the commandant navy yard, Norfolk, Va., to Commander Hunter, Virginia navy, appointing him to command the defenses of that yard.

NAVY YARD, GOSPORT [NORFOLK], *May 16, 1861.*

SIR: You will take command of the defenses now in progress of completion in this navy yard.

Detail the requisite number of men for the great guns, and carry them through the exercise at least once a day. You will have prepared forty rounds of grape and canister shot for each gun, and cartridges in like number, ready for immediate service, carefully put in the magazine prepared for them at each battery, at which place you will have a good supply of musket and pistol cartridges for the small-arm men.

The musketeers should be exercised at the loopholes and other positions, and every care taken to prevent confusion in case of attack.

Lieutenant Maury will report to you for duty.

Respectfully, etc.,

F. FORREST,
Commandant.

Commander THOS. T. HUNTER,
Virginia Navy.

Order of the commandant navy yard, Norfolk, Va., to Commander Page, Virginia navy, regardiny preparation of guns and equipment.

NAVY YARD, GOSPORT [NORFOLK], *May 17, 1861.*

SIR: Be pleased to prepare for battery under charge of Captains Shiels and Todd four 32-pounders, 42 cwt., fifty solid shot for each gun. with carriages, eye and ring bolts, and all their appurtenances complete.

Respectfully, etc.,

F. FORREST,
Commandant.

Commander R. L. PAGE,
Inspector Ordnance, Navy Yard, Gosport.

Order of the commandant of navy yard, Norfolk, Va., to Commander Page, Virginia navy, regarding preparation of guns and equipment.

NAVY YARD, GOSPORT [NORFOLK], *May 17, 1861.*

SIR: You will be pleased to have prepared and furnished, on the requisition of General Gwynn, and landed at Newton wharf in Norfolk the following articles, viz: Four 27 cwt. guns, 32s; 4 carriages for solid guns; 5 rounds of grape (20); 10 rounds of shot each (40); 5 rounds of canister, if on hand; 150 boarding pikes; rammers and sponges, side and train tackles.

Respectfully, etc.,

F. FORREST,
Commandant.

Commander R. L. PAGE,
Inspector Ordnance, Navy Yard, Gosport.

Instructions of commandant navy yard, Norfolk, to Captain Hunter, Virginia navy, regarding transportation for persons desiring to go North.

NAVY YARD, GOSPORT [NORFOLK], *May 20, 1861.*

SIR: A request having been made by the commanding naval officer near Fortress Monroe under a flag of truce on Saturday last for the safe conduct to that fleet of certain families supposed here and detained against their wishes, you will proceed this day at noon in the steamer *Empire*, under a flag of truce, to the flagship of the fleet of the late United States off that point, and deliver to the commanding naval officer such women and children or other persons as may have presented themselves for a passage to return to their Northern friends.

On your arrival, you will say to the commanding officer that a notice was placed in the city papers, informing all who wished to go North to report on Monday for a passage; and further inform him that the commanding general and myself will most cheerfully give every facility to any one to rejoin their friends who may elect to leave the State.

Respectfully, etc.,

F. FORREST.

Captain THOS. T. HUNTER,
Virginia Navy.

Order of the commandant of navy yard, Norfolk, Va., to Commander McBlair, Virginia navy, to prepare foundation for XI-inch gun to be mounted at Craney Island.

NAVY YARD, GOSPORT [NORFOLK], *May 22, 1861.*

SIR: We are making a turntable for the purpose of mounting an XI-inch gun on Craney Island.

You will please select the spot where you wish to place it, and have dug a foundation 12 feet 6 inches by 12 feet 6 inches, and 28 feet deep, the bottom smoothed off by a spirit level, and report when ready.

Everything here will be ready in four days.

Very respectfully, your obedient servant,

T. T. HUNTER, *Adjutant,*
For F. FORREST.

Captain WILLIAM MCBLAIR,
Craney Island Battery.

Order of commandant navy yard, Norfolk, to Lieutenant Jones, C. S. Navy, to assume command of Pig Point battery.

NAVY YARD, GOSPORT [NORFOLK], *May 24, 1861.*

SIR: You are hereby ordered to take command of the Pig Point battery, and report to me from time to time, as occasion may serve, all matters connected with your command.

F. FORREST, *Commandant.*

Lieutenant J. PEMBROKE JONES,
C. S. Navy.

Order of commandant navy yard, Norfolk, Va., to Midshipman Mayo, Virginia navy, to proceed to Barrett's Point, Nansemond River, Virginia.

NAVY YARD, GOSPORT [NORFOLK], *May 28, 1861.*

SIR: You will proceed without delay to Barrett's Point, at the mouth of Nansemond River, and cooperate with Captain Philip in all matters connected with his duties there, carefully drilling and exercising the men at the great guns, etc.

F. FORREST, *Commandant.*

Midshipman MAYO.

Order of commandant navy yard, Norfolk, to Commander Pegram, Virginia navy, to assume command of Sewell's Point battery.

NAVY YARD, GOSPORT [NORFOLK], *May 29, 1861.*

SIR: You will report to Brigadier-General Huger for duty for command of the battery of Sewell's Point. You will cooperate with the senior army officer in placing that fort in perfect order, exercising, drilling, and instructing the men at the great guns. Lieutenant Fitzgerald will turn these duties over to you and return to his former position at Craney Island.

Respectfully,

F. FORREST, *Commandant.*

Commander R. B. PEGRAM,
Virginia Navy.

Order of commandant navy yard, Norfolk, to Commander Maury, Virginia navy, to relieve Commander Pegram in command of Sewell's Point battery.

NAVY YARD, GOSPORT [NORFOLK], *May 30, 1861.*

SIR: You will proceed to Sewell's Point for duty and relieve Commander Pegram in command of the naval battery at that place, informing Brigadier-General Huger of this order.

Respectfully,

F. FORREST.

Commander W. L. MAURY,
Virginia Navy.

Order of commandant navy yard, Norfolk, to Commander Pegram, Virginia navy, to assume command of Pig Point battery.

NAVY YARD, GOSPORT [NORFOLK], *May 30, 1861.*

SIR: You are hereby detached from duty at Sewell's Point battery, and you will proceed to Pig Point to take command of the battery at that place, informing Brigadier-General Huger of the change.

Respectfully,

F. FORREST,
Commandant.

Commander R. B. PEGRAM,
Virginia Navy.

Letter from the commandant navy yard, Norfolk, Va., to General Lee, commanding Virginia forces, regarding the raising and docking of the steamer Merrimack.

NORFOLK, VA., *May 30, 1861.*

We have the *Merrimack* up and just pulling her in the dry dock.

F. FORREST,
Commandant.

General R. E. LEE.

Order of the commandant navy yard, Norfolk, Va., to Commander Page, Virginia navy, regarding guns and equipment for Tanner's Creek, Virginia.

NAVY YARD, GOSPORT [NORFOLK], *May 31, 1861.*

SIR: You will be pleased to furnish Commander A. Sinclair with four 32 pounders, 27 cwt., and their carriages for the defense of Tanner's Creek.

Respectfully,

F. FORREST,
Commandant.

Commander R. L. PAGE,
Assistant Inspector Ordnance, Navy Yard.

Order of the Chief of the Office of Naval Detail and Equipment to Commander Tucker, Virginia navy, regarding C. S. S. Yorktown.

OFFICE OF NAVAL DETAIL AND EQUIPMENT,
Richmond, Va., June 3, 1861.

SIR: You are hereby appointed to the command of the steamer *Yorktown*, and, in addition to the other duties intrusted to your charge, you will superintend the preparation and equipment of that vessel for service.

By order of Major-General Lee:

Respectfully, etc.,

S. BARRON,
Captain, in Charge.

Commander JOHN R. TUCKER,
Virginia Navy, Richmond, Va.

Letter from commandant navy yard, Norfolk, to the president of the Albemarle and Chesapeake Canal Company regarding the use of steamer Roanoke.

SIR: I hereby authorize you to dispatch immediately the steamer *Roanoke*, under command of Captain A. Sinclair, Virginia navy, to Nansemond River on important state service. I agree to pay for the services of said steamer from this date to her return and delivery to you at Norfolk $30 per day, and find everything necessary for her navigation and return her in good order. In case of loss, or the State should elect to keep her, the purchase money to be $10,000.

Signed at Virginia navy yard, this 5th day of June, 1861.

F. FORREST,
Commandant.

MARSHAL PARKS,
President Albemarle and Chesapeake Canal Company, Norfolk.

Cancellation of contract for use of steamer Roanoke.

The contract for the use of the steamer *Roanoke* is hereby canceled and the vessel returned to Mr. Marshal Parks in good condition.

Given under my hand, this 20th June, 1861.

F. FORREST,
Commandant.

Letter from Brigadier-General Huger, C. S. Army, to General Lee, commanding forces of Virginia, regarding the usefulness of the steamer Roanoke in keeping open communication.

HEADQUARTERS FORCES OF VIRGINIA,
Norfolk, Va., June 7, 1861.

SIR: The great difficulty of communicating with and supplying our batteries on the Nansemond River has retarded the work on them, and been of serious inconvenience to us. I determined to put a small steamer on the river, and on the night before last Captain A. Sinclair

took the small steamer *Roanoke*, which Commodore Forrest had chartered and put at my disposal. Captain Sinclair ran her in very handsomely, without being discovered by the guard boats of the enemy, and she is now on the river; and, in connection with the railroad to Suffolk, puts us in easy communication with all the batteries on the Nansemond River.

Very respectfully, your obedient servant,

BENJ. HUGER,
Brigadier-General, Commanding.

Major-General R. E. LEE,
Commanding Forces of Virginia.

Report of Captain Barron, Virginia navy, to the governor of Virginia, regarding naval defenses of the rivers of Virginia.

OFFICE OF NAVAL DETAIL AND EQUIPMENT,
Richmond, June 10, 1861.

SIR: I have the honor to inform your Excellency that the important duty of the naval defenses of the rivers of Virginia was assigned to the officers of the Virginia navy on the 23d of April last.

A few days previous the magazine at Norfolk, with upward of 300,000 pounds of powder and a large number of shells, was captured by Lieutenants Pegram, Sinclair, and Jones. This daring and unauthorized attack placed at the disposal of the State an amount of ammunition it would be difficult to supply, and, with the cannon taken at the Norfolk yard, afforded all the material needed for the batteries.

The rivers of Virginia being undefended and exposed to attack, it is due to the naval officers of Virginia to say that they went to work to defend them with zeal proportionate to the necessities of the case. Heavy cannon were moved to their destination with dispatch, ammunition and projectiles provided, men instructed, and every other preparation made to repel an opposing force.

In erecting the batteries at Sewell's Point, at Pig Point, at Aquia Creek, and at Gloucester Point they were attacked by armed steamers. In each case the enemy were repulsed, and the works continued and finished in spite of their fire.

The works on the Elizabeth, James, York, and Rappahannock rivers are so far completed as to justify the belief that they will be able to drive off any naval force that the U. S. Government can bring against them.

On the Potomac River batteries have been erected at the terminus of the Richmond, Fredericksburg and Potomac Railroad on Aquia Creek. In their incomplete state they were attacked three times by a superior force, and in each case Captain Lynch repulsed the enemy's steamers with considerable loss. If the attack should be renewed Captain Lynch is now prepared to strike a more serious blow.

The command of the steamer *Teaser* has been assigned to Lieutenant Rochelle. Two 32-pounder guns have been placed upon her, and she is now employed on the defenses of James River.

Captain J. R. Tucker is fitting out the steamer *Yorktown* with as heavy a battery as she will bear. She will be ready by the 1st of July, and will be a valuable auxiliary to the defenses of James River.

A howitzer battery of six guns has been organized by Lieutenant Parker. Four of the pieces are now mounted. The drill of the men is perfect, and this battery will be valuable, whether employed in the field or in the defenses of Richmond.

The frigate *Merrimack* has been raised, and is now in the dry dock at Norfolk. The other sunken ships will be raised as soon as the dock is ready to receive them.

The enclosed list marked A will show the number and caliber of the cannon at the various batteries, and that marked B the number and caliber sent to the other States of the Confederacy.

I am, very respectfully, your obedient servant,

S. BARRON,
Captain.

[Hon. JOHN LETCHER,
Governor of Virginia.]

[Enclosures.]

A.

NAVAL DEFENSES OF VIRGINIA.

James River.—Captain H. H. Cocke, commanding officer.

Fort Powhatan, Lieutenant C. St. George Noland.

Six 32-pounders of 51 cwt. | Two 32-pounders of 27 cwt.

(NOTE.—Two more 32-pounders of 27 cwt. and two more 32-pounders of 51 cwt. are to be sent for this battery.)

Jamestown Island, Lieutenant C. ap R. Jones.

Three 9-inch guns of 9,000 pounds.
Six 32-pounders of 57 cwt.
Nine 8-inch army Columbiads.
Two 12-pounder army guns.

Steam tug *Teaser*, Lieutenant J. H. Rochelle, Commanding.

Two 32-pounders of 27 cwt.

Steamer *Yorktown* (preparing at Richmond), Commander John R. Tucker.

Will mount one 10-inch pivot gun of 12,000 pounds.
Will mount one 64-pounder pivot gun of 106 cwt.
Will mount six 8-inch broadside guns of 63 cwt.

(NOTE.—Two more 8-inch guns can be mounted on this vessel and will be ordered.)

Arrangements are now being made for mounting sixty guns of different calibers and weights for the defenses of the city of Richmond. We are now organizing a naval battery of six 12-pounder howitzers, four of which are now completed. They are preparing under the immediate superintendence of Lieutenant William H. Parker.

York River.—Captain W. C. Whittle, commanding officer.

West Point, Commander William Leigh.

Two 9-inch guns of 9,000 pounds. | One 32-pounder of 57 cwt.

(NOTE.—Four 32-pounders of 33 cwt. are to be sent for this battery.)

Gloucester Point, Commander T. J. Page.

Eight 9-inch guns of 9,000 pounds.
Two 32-pounders of 57 cwt.
One 32-pounder of 33 cwt.
One 32-pounder of 27 cwt.

(NOTE.—Five more 32-pounders of 27 cwt. are to be sent for this battery.)

Yorktown, Commander J. L. Henderson.

Two 8-inch army Columbiads. | Four 8-inch army barbette guns.

(NOTE.—Two more 8-inch guns are to be sent for this battery).

Potomac River.—Captain W. F. Lynch, commanding officer.

Aquia Creek, Captain W. F. Lynch.

Two 8-inch guns of 63 cwt.	One Parrott rifled fieldpiece (Walker's company).

Potomac Creek, Lieutenant William Taylor Smith.

Two 32-pounders of 27 cwt.

Hill battery (near to the right of Aquia Creek), Lieutenant Charles C. Simms.

Two 8-inch army Columbiads on barbette carriages.

Simms' Point, near to the left of Aquia Creek (masked battery).

One 8-inch gun of 63 cwt.	Three Parrott rifled fieldpieces.

Potomac Creek Bridge, Commander R. D. Thorburn.

One 8-inch gun of 63 cwt.

Rappahannock River.—Captain R. G. Robb, commanding officer.

Lowry's Point, Lieutenant Henry H. Lewis.

Two 8-inch army Columbiads.	Two 32-pounders of 27 cwt.

(NOTE.—Three 8-inch guns of 63 cwt. have been ordered to be prepared at Norfolk for the naval defenses of the Rappahannock.)

Harper's Ferry.—Lieutenant Charles M. Fauntleroy.

Two 32-pounders of 57 cwt.

Elizabeth River and vicinity.

Fort Norfolk, Commander A. Sinclair.

Twelve 9-inch guns of 9,000 pounds.	Four 32-pounders of 51 cwt.

Fort Nelson naval hospital, Commander Charles F. McIntosh.

Two 8-inch guns of 55 cwt. Eight 32-pounders of 57 cwt.	Five 32-pounders of 51 cwt.

Craney Island, Commander William McBlair.

One 10-inch pivot gun. Ten 8-inch guns of 63 cwt.	Six 8-inch guns of 55 cwt. Four 32-pounder guns of 51 cwt.

(NOTE.—Arrangements have been made for mounting thirty guns in all.)

Bush's Bluff, Boatswain Young, volunteer.

Five 32-pounder guns of 42 cwt.

Pinner's Point, Lieutenant George W. Harrison.

Six 32-pounders of 57 cwt. Three 32-pounders of 51 cwt.	Three 32-pounders of 42 cwt.

Sewell's Point, Commander William Lewis Maury.

Six 9-inch guns. Two 32-pounders of 57 cwt.	Two 32-pounders of 27 cwt.

(NOTE.—Arrangements have been made for mounting not less than twenty guns.)

Lambert's Point, Lieutenant John S. Taylor.

Six 32-pounders of 59 cwt.

Barrett's Point, Lieutenant J. Pembroke Jones.

Six 32-pounders of 57 cwt.

Town Point.

(Number and caliber of guns not reported. Arrangements have been made for mounting five guns.)

Pig Point, Commander R. B. Pegram.

Four 8-inch guns of 55 cwt.
Four 32-pounders of 42 cwt.

Frigate *United States*, receiving ship, Commander Thomas R. Rootes.

Spar deck, three 9-inch guns of 9,000 pounds.
Gun deck, sixteen 32-pounders of 51 cwt.

(NOTE.—In addition to preparing this vessel as a school ship for drilling men, she has been provided with the above armament for the defense of the yard and the gun park at St. Helena [Va.].)

The frigate *Merrimack* has been raised, and is now in dry dock at Norfolk. She is valued, in her present condition, at not less than $250,000.

Arrangements are now being made for raising the sloops of war *Germantown* and *Plymouth*.

OFFICE OF NAVAL DETAIL AND EQUIPMENT,
Richmond, Va., June 10, 1861.

B.

List of guns sent from the Norfolk navy yard to North Carolina, Tennessee, Louisiana, and Georgia.

NORTH CAROLINA.

Two 32-pounders of 42 cwt.
Four 32-pounders of 27 cwt.
Four 24-pounders of 31 cwt.
Twenty 32-pounders of 61 cwt.
Ten 32-pounders of 57 cwt.
Total, 80 guns.
Ten 32-pounders of 46 cwt.
Ten 8-inch guns of 63 cwt.
Twenty 32-pounder carronades 17 or 18 cwt.

TENNESSEE.

Ten 32-pounders of 42 cwt.
Thirty-two 32-pounders of 61 cwt.
Total, 42 guns. Ten 42-pounders of 70 cwt. were also sent from Richmond.

LOUISIANA.

Eight 8-inch guns of 63 cwt.
One 9-inch gun of 9,000 pounds.
Total, 21 guns.
Eight 32-pounders of 33 cwt.
Four 32-pounders of 27 cwt.

GEORGIA.

Two 32-pounders of 27 cwt.

Letter from Major-General Lee, C. S. Army, Commanding Virginia forces, to the governor of Virginia, making statement regarding military and naval preparation for defense of that State.

HEADQUARTERS, *Richmond, Va., June 15, 1861.*

SIR: Agreeably to your request, I submit a statement of the military and naval preparation for the defense of Virginia, from the period of her separation from the U. S. Government to the date of transfer of the military operations of the State to the Confederate Government.

Arrangements were first made for the establishment of batteries to prevent the ascent of our enemy by hostile vessels. As soon as an examination was made for the selection of sites their construction was begun and their armament and defense committed to the Virginia navy. Preparations were also begun for receiving into the service of the State volunteer companies, and for organizing, arming, and equipping them. Mustering officers were appointed, rendezvous established, and provision made for their subsistence and shelter. The primary estimate of the number of troops of all arms required, based upon the points to be defended, amounted to 51,000 men. The estimated quota of each portion of the State has been furnished, except from the western section. Arrangements were made for calling out the volunteers from the western section at the same time and in the same manner as from the eastern section, but as yet it has been feebly responded to.

Complete returns from the troops in the field have not and, from the nature of things, can not for some time be received; but from the best source of information within our reach, the number of Virginia troops is about 35,000. This amount probably falls below the real number, for referring to the report of the colonel of ordnance, it will be seen that he has issued 2,054 rifles and carbines, and 41,604 muskets, in addition to pistols and sabers to the cavalry. Thirteen thousand arms have also been issued from Lexington, making a total of 56,658. Seven thousand of those from Lexington and several thousand from the arsenal at Richmond have been issued to troops from other States; but as many of the Virginia companies, supposed to be about 5,000 men, were armed and equipped when received into the service of the State, should the number of unarmed companies from other States not differ materially from the number of armed companies of the State, the number of Virginia troops in the field may be assumed to be about 40,000. When it is remembered that this body of men were called from a state of profound peace to one of unexpected war, you will have reason to commend the alacrity with which they left their homes and families and prepared themselves for the defense of the State. The assembling of men, however, was not the most difficult operation. Provision for their instruction, subsistence, equipment, clothing, shelter, and transportation in the field required more time and labor. Ammunition of every kind had to be manufactured. The carriages of the guns for river, land, and field service had to be made, with the necessary implements, caissons, battery wagons, etc. One hundred and fifteen guns for field service have thus been provided, from which twenty light batteries of four guns each have been furnished, with the requisite horses, harness, etc.

For the defense of James River, two batteries and two steamers have been provided, mounting, altogether, forty guns, ranging in caliber from 32-pounders to 8 and 9 inch Columbiads. Arrangements are also in process for mounting sixty guns, of different weights, on the defenses around Richmond, and a naval battery of 6 to 12-pounder howiters is in process of organization.

On York River three batteries have been constructed, mounting thirty guns, of caliber similar to the guns on James River.

Sites for batteries on the Potomac have also been selected, and arrangements were in progress for their construction, but the entire command of that river being in the possession of the U. S. Government, a larger force is required for their security than could be devoted to that purpose. The batteries at Aquia Creek have only been prepared. Twelve guns are in position there.

On the Rappahannock River a 4-gun battery of 32-pounders and 8-inch Columbiads has been erected.

Six batteries have been erected on the Elizabeth River, to guard the approaches to Norfolk and the navy yard. They mount eighty-five guns, 32-pounders and 8 and 9-inch Columbiads.

To prevent the ascent of the Nansemond River and the occupation of the railroad from Norfolk to Richmond, three batteries have been constructed on that river, which will mount nineteen guns.

The frigate *United States* has been prepared for a school ship, provided with a deck battery of nineteen guns, 32-pounders and 9-inch Columbiads, for harbor defense. The frigate *Merrimack* has been raised and is in the dry dock, and arrangements are made for raising the *Germantown* and *Plymouth*.

In addition to the batteries described, other works have been constructed for their land defense, exceeding in many instances the works on the batteries themselves. An extensive line of field works has been erected for the security of Norfolk on the sides toward the bay. Redoubts for the same purpose have been constructed at Jamestown Island, Gloucester Point, Yorktown, and across the neck of land below Williamsburg. I have confined myself to a general narration of operations, and for the details refer you to the reports of several chiefs of staff.

Very respectfully, etc.,

R. E. LEE,
General, Commanding.

His Excellency JOHN LETCHER,
Governor of Virginia.

Letter from the Secretary of the Navy of the Confederate States, to General Lee, C. S. Army, commanding Virginia forces, regarding assignment to army duty of C. S. S. Teaser.

CONFEDERATE STATES,
Navy Department, Richmond, June 17, 1861.

SIR: Your letter of the 16th instant was this day received.

I understand that the *Teaser*, the steamer referred to, has been doing the duty to which you desire to assign her; but orders will this day be given to her commanding officer to report to you forthwith for duty.

I am, respectfully, your obedient servant,

S. R. MALLORY,
Secretary of the Navy.

General ROBERT E. LEE,
General, Commanding Virginia Forces, Richmond, Va.

Order from Major-General Lee, C. S. Army, commanding at Richmond, Va., to Lieutenant Carter, C. S. Navy, commanding C. S. S. Teaser, regarding cooperation in defense of James River.

HEADQUARTERS, *Richmond, Va., June 18, 1861.*

SIR: It is desired that the C. S. steam tender *Teaser* shall unite with the batteries at Jamestown Island in defense of James River, and be employed in obtaining intelligence of the movements of hostile vessels

and the landing of troops on either side of the river. It is important that you particularly watch the landings in the vicinity of Grove wharf, on the left bank, and Stone House wharf, on the right bank, below Jamestown, and endeavor to give notice to the troops on either bank. A body of infantry guard the former point, and a troop of cavalry commanded by Captain Ruffin, patrol the country about Burwell's Bay to convey intelligence to the troops at Suffolk. It is suggested that you establish a system of signals as a means of communication with the troops, and take every precaution not to jeopardize the safety of your boat by proceeding too far beyond the protection of the guns of the batteries. You will report to the commanding officer of Jamestown Island, to whom a copy of your orders will be sent.

Respectfully, etc.,

R. E. LEE,
General, Commanding.

Lieutenant R. R. CARTER,
Commanding C. S. Steam Tender Teaser.

Letter from the governor of Virginia to the Virginia State convention, enclosing list of vessels employed by that State.

EXECUTIVE DEPARTMENT, *June 24, 1861.*

GENTLEMEN OF THE CONVENTION: The report of Captain Barron, herewith transmitted, will furnish the information called for by your resolution, adopted this day.

Respectfully,

JOHN LETCHER.

[Enclosure.]

List of vessels employed by the State of Virginia.

OFFICE OF ORDERS AND DETAIL, *June 24, 1861.*

Steamer *Virginia*, Rappahannock River; compensation, $2,000 per month and cost of coal, provisions, and repairs.

Steamer *Logan*, York River; compensation, $2,000 per month and cost of coal, provisions, and repairs.

Steamer *Yorktown*, Richmond, Va., seized; fitting out as a vessel of war to carry 8 guns.

Steamer *Jamestown*, Richmond, Va., seized.

Steam tug *Teaser*, purchased; mounts two light 32-pounder guns; employed on James River, Jamestown Island.

Steamer *Northampton*, purchased for $45,000; James River.

Steamer *George Page*, seized at Alexandria; at Aquia Creek.

Steamer *Empire*, at Norfolk; terms of charter not reported.

S. BARRON,
Captain, in Charge.

Order of the commandant navy yard, Norfolk, Va., to Mr. H. Herbert, regarding the obstructing of the channel of the Elizabeth River, Virginia.

NAVY YARD, GOSPORT [NORFOLK], *June 24, 1861.*

SIR: You are hereby authorized to take in charge the work to obstruct the channel below, and to collect the requisite numbers of men and amount of material, etc., to effect the same.

The executive officer of this yard will give you every facility in his power. A part of the work is in charge of Boatswain Smith.

Respectfully,

F. FORREST,
Commandant.

Mr. H. HERBERT,
Master Mason, Navy Yard, Gosport.

Order of the commandant navy yard, Norfolk, Va., to Commander Fairfax, C. S. Navy, regarding the replacing of guns in the batteries of the yard.

NAVY YARD, GOSPORT [NORFOLK], *June 24, 1861.*

SIR: The commodore directs me to say to you that he wishes at once to replace the guns in the yard batteries, together with all proper munitions, etc. He leaves the selection of the guns to yourself, but no time is to be lost.

Yours, etc.,

T. T. HUNTER,
For Commandant.

Commander A. B. FAIRFAX,
Inspector of Ordnance.

Order of commandant navy yard, Norfolk, Va., to Commander Hunter, C. S. Navy, to report to Brigadier-General Huger, C. S. Army, as bearer of flag of truce.

NAVY YARD, GOSPORT [NORFOLK], *June 24, 1861.*

SIR: You will report to Brigadier-General Benjamin Huger for the purpose of bearing a flag of truce to Fortress Monroe. The steamer *Empire* will be detailed for that duty.

I am, respectfully, your obedient servant,

F. FORREST,
Commandant.

Commander T. T. HUNTER,
C. S. Navy.

Order of the commandant navy yard, Norfolk, Va., to Lieutenant Poindexter, C. S. Navy, to report to Brigadier-General Huger, C. S. Army, as bearer of flag of truce.

NAVY YARD, GOSPORT [NORFOLK], *June 29, 1861.*

SIR: You will report to General Huger as bearer of a flag of truce to the commanding naval officer off Fortress Monroe.

You will inform General Huger that the steamer *Empire* is placed at his command for this service.

Respectfully,

F. FORREST,
Commandant.

Lieutenant C. B. POINDEXTER,
C. S. Navy.

Order from Major-General Lee, C. S. Army, commanding at Richmond, Va., to Captain Hollins, C. S. Navy, to assume command of the naval defenses on James River.

HEADQUARTERS OF THE FORCES,
Richmond, Va., July 10, 1861.

CAPTAIN: A copy of the order assigning you to the charge of naval defenses of James River is herewith enclosed. You are desired to push forward the armaments as fast as practicable, and to continue the examination of the river from Day's Point to Mulberry Point, with a view of ascertaining the best method of commanding its navigation. You are requested to report upon the advantage of establishing batteries at Mulberry Point and the point opposite, and of interrupting the Swash Channel by loaded rafts or boats. Should batteries at Mulberry Point and the point opposite be considered advantageous, you will state your opinion as to the propriety of establishing there the guns now mounted at Fort Powhatan. You will take under your superintendence the general naval defenses of the river and the service of the batteries.

Respectfully, etc.,

R. E. LEE,
General, Commanding.

Captain GEORGE N. HOLLINS,
In Charge Naval Defenses, James River.

[Enclosure.]

SPECIAL ORDERS, No. 217. } HEADQUARTERS OF THE FORCES,
Richmond, Va., July 10, 1861.

* * * * * * *

VI. Captain George N. Hollins, C. S. Navy, having been detailed by the Secretary of the Navy to take charge of the naval defenses of James River, is assigned to that duty.

* * * * * * *

By order of General Lee:

GEO. DEAS,
Assistant Adjutant-General.

Order of the commandant navy yard, Norfolk, Va., to Midshipman McDaniel, C. S. Navy, regarding guns and equipment for Cedar Point battery, on Nansemond River, Virginia.

NAVY YARD, GOSPORT [NORFOLK], *July 12, 1861.*

SIR: You will take charge and deliver at Suffolk, Va., to Deputy Quartermaster Hurt, for Cedar Point battery on Nansemond River, the following ordnance and ordnance stores:

2 32-pounders, 57 cwt.; 1 8-inch gun, 63 cwt.
3 breechings, 9 tackles, 3 sponges.
3 rammers, 2 ladles, 1 scraper.
1 worm, 3 passing boxes, 3 primer boxes and bitts.
3 thumbstalls, 3 sets locks, lights, and aprons.
3 priming wires, 3 boring bitts, 3 tompions.
38 8-inch grommet wads, 100 32-pounder grommet wads.
25 32-pounder round shot.
25 32-pounder hard wads.
10 stands 10-inch grape shot.
25 stands 32-inch grape shot.
150 charges of powder.
200 cannon primers.
40 8-inch loaded shell.
10 8-inch canister.

Respectfully,

F. FORREST,
Commandant.

Midshipman H. C. MCDANIEL.

Letter from Commander Whittle, C. S. Navy, commanding naval defenses on York River, to Captain Ingraham, C. S. Navy, regarding the transfer of guns and equipment from Gloucester Point to Yorktown, Va.

WEST POINT, YORK RIVER, *July 12, 1861.*

CAPTAIN: I inclose herewith the weekly report* of Commander Page, in command of the naval battery at Gloucester Point. To the remarks annexed to that report I beg leave to call your prompt attention, and through you, the particular attention of the Secretary of the Navy. It appears from the report of Commander Page that two 14-inch shell guns sent to this (his) battery have been sent to Yorktown by order of Brigadier-General Magruder, with equipment and ten live shells, since last report. This is the first knowledge I have had of this transaction, and I desire to be furnished, at the earliest convenience of the Department with clear and explicit instructions on this point. If the commanding military officer on the peninsula is authorized to remove, without any consultation whatever with me, guns from naval batteries which have been placed under my orders by both the highest military and naval authority, my position here as commanding the naval defenses on York River is a delusion and a farce.

I am sir, respectfully your obedient servant,

WM. C. WHITTLE,
Commanding Naval Defenses on York River.

Captain D. N. INGRAHAM,
In Charge Office of Ordnance and Hydrography,
Navy Department, Richmond.

Order of the Secretary of the Navy to Commander Tucker, C. S. Navy, commanding C. S. S. Patrick Henry, to proceed on an active cruise.

CONFEDERATE STATES,
Navy Department, Richmond, July 13, 1861.

SIR: It is deemed important that the steamer *Patrick Henry*, under your command, shall leave James River at the earliest practicable moment and make an active cruise at sea against the enemy.

The Department is unwilling by any instructions to limit your discretion as to the time and manner of running the blockade, your cruising ground, or your return, confiding, as it does, in your good judgment; but it is evident that your success will be greatly promoted by your escape from the river without the enemy's knowledge.

Should a doubt at any time arise as to the course to be pursued, it may be solved by the consideration that, in accordance with the rules of Christian warfare, you are to inflict upon the enemy the greatest injury in the shortest time.

It is believed that the speed of the *Patrick Henry* is greater than that of any of the ships of the United States, and that her battery will enable her to engage such vessels as the *Harriet Lane* and the chartered steamers of the enemy's Navy generally, thus affording you the means of escaping from his first-class ships and of capturing those of the second class. The possession of one of the enemy's cruisers of this class, with her signal book, might enable you to capture some of his heavier vessels.

---

*Not found.

Steam propellers are important to us, as are all ordnance and military stores; and captures of this class you will endeavor to send safely into port.

Should you find it impracticable to leave the river, you will cooperate with the military forces against the enemy, keeping watch by day and night upon his movements, attacking and annoying him to the utmost of your power.

Should circumstances render it important to land your crew to cooperate with the land forces, you will secure your ship under the guns of the Jamestown battery, keeping her ready for instant service.

You will impress upon your officers the importance of establishing and maintaining good discipline, and of inciting every man to do his duty; and you will specially report to the Department the name, place of birth, age, character, and qualifications of every man under your command, whose good conduct, particularly in action, or in moments of peril or excitement may merit your commendation.

You will keep this Department advised of your movements, and you will endeavor to prevent all publications thereof, not authorized by yourself, as tending to defeat your objects.

With my best wishes for yourself and your command, I am, respectfully, your obedient servant,

S. R. MALLORY,
Secretary of the Navy.

Commander JOHN R. TUCKER,
Commanding C. S. S. Patrick Henry, Richmond, Va.

INDEX.

Page.

A. B. Thompson, Ship. Capture of, by C. S. S. Lady Davis, May 19, 1861.
Communications from
Gilchrist, R. C 650
Hood, Daniel 649
Navy Department, U. S 649
Deposition of C. S. collector of customs at Beaufort, S. C 652
Petition and testimony relating to share in prize money 652–658
Proceeds of sale. Statement of Treasury Department, C. S 652
Testimony of F. A. Hussey 650
A. C. Powell,* U. S. S. Movements of 50
A. W. Thompson, Schooner. Capture of 238, 239
Abercrombie, John J. Mentioned 425, 438, 440
Able, Edward. Mentioned 5, 69
Active, Schooner. Mentioned 65
Ada, Schooner. Information concerning 751
Adams, Rev. Mr. Mentioned 740
Adams, Albert. Mentioned 642, 643
Adams, Henry. Mentioned 98
Adams, Henry A. Mentioned 175, 178
Adams, Robert. Mentioned 280, 284
Adela, U. S. S.
Attached to Potomac Flotilla 540
Mentioned 566, 567, 574
Admiral Peter Tordenskjold, Norwegian bark. Mentioned 691
Adolph Hugel, U. S. schooner.
Captures made by 349, 377, 490–492
General Orders thanking officers and crew of, for aid in defense of Alexandria, Va 473
Mentioned 174, 204, 245, 252, 260, 303, 307, 362, 367, 374, 376, 380, 394, 408, 437, 496, 502, 506, 508, 531
Relieved from duty in Potomac Flotilla 567, 574
Adriatic, Tug. Firing upon, by Confederates, while bearing a flag of truce. 771, 774
Ainsworth, Charles. Mentioned 502, 506, 584
Airs, Rice. Mentioned 511
Alabama.
Blockade of coast of. See *Blockade of Southern ports.*
Order raising blockade 568
Albatross, U. S. S.
Mentioned 635, 662, 664, 754, 755, 768, 774, 780, 791, 793, 795
Ordered to duty in Atlantic Blockading Squadron 735
Alert,* U. S. tug. Orders for movements 75
Alexander, Mrs. Mentioned 146
Alexandria, Va. Withdrawal of guard vessel from 573
Alexandria, Va., Military Governor of. General Orders issued by, thanking officers and crew of U. S. schooner Adolph Hugel for services. 473

* See Watch, U. S. S.

Alleghanian, Ship. Page.
Burning of, by Lieutenant Wood, C. S. Navy, and party, October 29, 1862.
Arrest of Peter Smith for complicity in 141
Communications from
Jones, Warner T 141
Navy Department, U. S 140
Order of Navy Department, U. S., for investigation of 138
Reports of
Babcock, W. L 139
Harwood, A. A 138
Provost, Nelson 137
Statements of
Case, A. Ludlow 140
Jackson, James L 140
Mentioned 146, 346
Allen, Edward S. Mentioned 384, 470
Allen, Frederic B. Mentioned 531
Allen, W. Correspondence with Navy Department, U. S 6
Allen, William. Mentioned 80, 85
Alliance, Ship. Correspondence concerning, from
Peterson, J. C 782
Navy Department, U. S 754
Allison, William. Mentioned 103
Allston, F. J. Mentioned 128, 131, 132
Almira Ann, Schooner. Capture of 637
Amelia, Ship.
Capture of 728, 729
Mentioned 742, 749
Amy Warwick, Brig. Capture of 784
Anacostia, U. S. S.
Abstract log, September 29, 1862, to April 6, 1863 580
Attack upon Confederate pickets near Freestone Point, Va 3
Boat expeditions from, to
Port Royal, Va 66, 67
St. George's Island 157
Burning of sloop Buckskin 492
Captures made by 49, 209, 253, 254, 270, 274–276, 282, 302
Condition of 28, 372
Cooperation with Army in expedition to Northern Neck of Virginia 442–451
Engagement with Confederate batteries at
Brandywine Hill, Va., December 10, 1862 193
Cockpit Point, Va 15
Port Royal, Va., December 4, 1862 ..... 184, 185, 191
Expeditions to
Machodoc Creek, Virginia 410
Tappahannock, Va 277, 278
Mentioned 25, 27, 50–54, 56, 58, 65, 73, 75–77, 80, 125, 137, 161, 165, 166, 171, 176, 178, 182, 183, 186, 189, 195, 199, 200, 203, 205, 207, 212, 215, 217, 256–258, 260–262, 267, 268, 273, 281, 283, 284, 287, 303, 329, 353, 357, 362, 363, 366, 367, 370, 374, 375, 380, 383, 387, 388, 390, 391, 393, 407, 408, 413, 426, 429, 430, 441, 496, 502, 506, 508, 510, 522, 531, 536, 584, 587–590, 592, 596, 600, 601, 603, 606, 607, 610, 611, 696, 711
Operations, etc., in
Mobjack Bay 44–46
Potomac River 167
Rappahannock River 78, 269

Anacostia, U. S. S.—Continued. Page.
Orders for movements 326, 389, 514
Relieved from duty in Potomac Flotilla 567, 574
Anderson, Aaron. Mentioned 535
Anderson, Caroline. See *Caroline Anderson, Schooner.*
Anderson, Charles. Mentioned 686
Anderson, E. C. Mentioned 735
Anderson, Joseph R. Mentioned 117
Anderson, Samuel. Mentioned 90, 600
Anderson, William. Mentioned 491
Andrew, John A. Mentioned 632
Andrews, Thomas. Mentioned 139
Ann Hamilton, Schooner.
Report of provost-marshal-general of Maryland concerning 391
Seizure of 392
Ann Pickerel, Schooner. Order of Commander Parker regarding seizure of. 525
Ann Squires, Sloop. Seizure of 112-115
Anna Maria, Sloop. Mentioned 608
Anna Smith, Schooner. Capture of 720
Aquia Creek, Virginia. Cooperation of the Navy with the Army at.
Communications from
Alexandria, Va., Mayor of 74
Burnside, A. E 68, 70, 72, 76
Navy Department, U. S 68, 73, 285, 286
Wilkes, Charles 68
Orders and instructions.
Harwood, A. A 286
Navy Department, U. S 68, 72, 75, 76, 155, 285, 286, 472
Reports of
Ives, Thomas P 289
Foster, Amos P 70
Hamilton, Alex 71
Harwood, A. A 155
Magaw, Samuel 168, 286
Morris, George U 71
Navy yard, Washington, Commandant of 77
Parker, Foxhall A 454, 472
Quackenbush, S. P 71, 72, 75
Shankland, William F 71
Arabia, British steamer. Mentioned 776
Arago, Steamer. Mentioned 608
Archer, W. H. Mentioned 67
Arcola, Schooner.
Capture of 722
Disposition of 701, 725
Mentioned 726
Arctic, Schooner.
Capture and destruction of 85, 277
Mentioned 93
Argo, Ship.
Capture of 630, 637
Mentioned 631
Ariel, British bark. Mentioned 783
Arkansas Troops. Mentioned. Infantry—Regiment: 3d, 26.

Arletta, U. S. schooner. Page.
Boat expedition from, to Freestone Point, Va 127
Mentioned 108, 128, 142
Armstrong, William M. Mentioned 749, 756
Army of the Potomac. See *Potomac Flotilla. Cooperation of, in the movements of the Army of the Potomac.*
Aroostook, U. S. S.
Mentioned 100
Orders for movements 72
Arrants, Richard B. Mentioned 531
Arthur, Francis. Mentioned 421, 608
Arthur, William A.
Correspondence with
Eldridge, J. H 555
Street, William T 473
Mentioned 352, 353, 358, 405, 437, 455, 483, 484, 496, 502, 506, 508, 550, 562, 564
Reports of.
Blockade runners. Arrest of 486
Milford Haven Creek. Burning of schooner in 353
President, U. S. Search for assassin of 556
Shelton Creek, Virginia. Destruction of salt works on 455
Smith's Point. Capture of boat from light-ship at 489
Stutt's Creek, Virginia. Expedition to 484
Ashton, George D. Mentioned 312
Ashton, H., Miss. Mentioned 312
Ashton, James R. Mentioned 152
Ashton, William (Colored). Mentioned 127
Ashton, William. Mentioned 227
Athey, J. C. Mentioned 320, 321
Atkins, Benjamin. Mentioned 105
Atlanta, U. S. S.
Arrival of, at Fortress Monroe in tow of U. S. S. Commodore Read 467
Mentioned 464, 465
Atlantic, Steamer. Mentioned 682, 683
Atlantic, Tug. Mentioned 215-217
Atlantic Blockading Squadron.
Affairs of. Reports of S. H. Stringham 714, 726, 749
Captures made by. Reports of S. H. Stringham 729, 737
Condition of 665, 691
Disposition of vessels. Reports of S. H. Stringham. 630, 662, 664, 753, 755, 774, 791
Fitting out of vessels for 619
Increase of force 627, 628, 639, 659, 666, 677, 678, 681, 685, 687, 707, 710, 711, 713, 718, 734-736, 773, 783
Insufficiency of force 664, 682, 793
Order of Navy Department, U. S., regarding name and vessels 635
Stringham, S. H.
Appointed to command 619
Assumes command 624
Supplies for.
Communication from Navy Department, U. S 633
Orders and instructions.
Navy Department, U. S 641, 680, 703
Stringham, S. H 641
Reports of S. H. Stringham 624, 637

Atlantic Blockading Squadron—Continued. Page.
Transfer of cannon to, by War Department, U. S.
Communications from
Navy Department, U. S. 745
Stringham, S. H. 750
Order countermanded 770
Purchase of vessel 745, 750, 757, 758
Vessels constituting 630, 635
Atwell, Benjamin. Mentioned 700
Augur, Christopher C. Mentioned 495, 550, 555
Babcock, Charles A. Mentioned 405, 420
Babcock, William L.
Mentioned 114, 139, 160–162, 204, 472
Reports of.
Alleghanian, Ship. Burning of, by John Taylor Wood and party, October 29, 1862 139
T. A. Ward, U. S. schooner. Captures made by 115, 116, 283
Bache, A. D. Mentioned 471
Bacon, William. See *William Bacon, U. S. schooner.*
Badger, Oscar C.
Mentioned 15, 25, 44, 50
Notice issued by, to citizens of Virginia to surrender arms 49
Report of reconnoissance in Mobjack Bay 44
Bagby, William. Mentioned 152
Bagley, ———. Mentioned 63
Bailey, Mr. Mentioned 5
Bailey, Mr. Mentioned 590, 592
Bailey, U. S. schooner.
Mentioned 4, 5
Orders for movements 82
Bailey, William. Mentioned 53
Bainbridge, U. S. brig. Mentioned 636, 678, 696, 702
Baine, Washington. Mentioned 607
Baker, Captain. Mentioned 593
Baker, Annetta. Mentioned 685
Baker, John G.
Mentioned 352, 353, 378, 392
Report of attack upon U. S. revenue steamer Hercules while aground in Great Wicomico River, Virginia 354
Baker, Lizzie. See *Lizzie Baker, Steamer.*
Baker, Nellie. See *Nellie Baker, Steamer.*
Baker, T. Harrison. Mentioned 692
Balch, Hannah. See *Hannah Balch, Brig.*
Baldwin, Charles E. Mentioned 229
Ball, Albert. Mentioned 225
Ball, Thomas. Mentioned 456, 457
Baltic, Steamer. Mentioned 682, 683
Baltimore, U. S. S.
Mentioned 21, 165, 399, 451, 609
Passage of Confederate batteries on Potomac River by 22
Baltimore, Md., U. S. District Judge. Correspondence with G. J. Pendergrast 695, 722
Bamberg, Ship.
Arrival of, at Havana 756
Mentioned 765

Page.
Bandy, Eli. Mentioned 83
Banks, James. Mentioned 208
Banks, Nathaniel P. Mentioned 49, 107, 109, 785
Banshee, U. S. S.
Assistance rendered U. S. revenue steamer Tiger 517
Attached to Potomac Flotilla 497, 501, 503
Mentioned 502, 506, 508, 526, 528–533, 566, 567, 569
Orders for movements 512, 514
Relieved from duty in Potomac Flotilla 574
Barkous, Dennis. Mentioned 632
Barlock, Henry. Mentioned 480
Barnard, L. T. Mentioned 660
Barnard, Martha. Mentioned 685
Barnes, ———. Mentioned 557
Barnes, James. Mentioned 98
Barnes, James (General).
Correspondence with William T. Street 504
Mentioned 476, 481, 495, 500, 558
Barnes, Walter. Mentioned 219
Barnes, Wat. Mentioned 5
Barney, Commodore. See *Commodore Barney, U. S. S.*
Barney, Hiram. Mentioned 781
Barnum, Martha. Mentioned 685
Barnwell, S. E. Mentioned 652
Barrack, Henry. Mentioned 424
Barrett, John. Mentioned 502, 506, 508, 531
Barron, Samuel.
Mentioned 809
Report of naval defenses of Virginia 803
Barrow, John. See *John Barrow, British vessel.*
Barry, Catharine. Mentioned 684
Barry, Charles. Mentioned 146
Barry, George H. Mentioned 185
Barstow, J. J. Mentioned 138
Bartholomew, Lyman. Mentioned 267
Bateman, T. R. Mentioned 133
Bayer, G. W. Mentioned 377
Bayley, William. Mentioned 227
Bayne, William. Mentioned 752
Beale, Richard L. T. Mentioned 187
Bean, ———. Mentioned 69
Beam, Peter M., jr. Mentioned 536
Beardsley, Seaman. Mentioned 448
Becket, William M. Mentioned 155
Belham, J. H. Mentioned 137
Bell, Mrs. Mentioned 746
Bell, Jacob. See *Jacob Bell, U. S. S.*
Bell, Lemuel. Mentioned 365
Bell, Thomas. Mentioned 456, 457
Belle Conway, Schooner.
Capture of 637
Mentioned 729
Benjamin, James S. Mentioned 251, 354
Benjamin, Judah P. Mentioned 33
Bennett, H. Mentioned 239
Benson, John. Mentioned 155

Page.
Benson, William. Mentioned 105
Bentley, Ambrose. Mentioned 126, 148, 149
Bentley, John W. Mentioned 728, 730
Bentrick, Charles. Mentioned 14
Berret, James G. Mentioned 111
Berrien, John M. For correspondence, see *Naval station, Norfolk, Va., Commandant of.*
Berry, George H. See *George H. Berry, Schooner.*
Berry, T. See *T. Berry, Sloop.*
Bibb, U. S. Coast Survey steamer.
Arming and equipping 461, 462
Grounding of, in Bush River, Maryland 466
Guarding Gunpowder River bridge, Maryland 463
Transfer to U. S. Coast Survey 471
Bickman, J. C. See *J. C. Bickman, Brig.*
Bigger, William. Mentioned 145
Bile, Daniel. Mentioned 73
Billups, B. F. Mentioned 159, 160
Billups, John W. Mentioned 147
Bingham, William. Mentioned 340, 341
Biscoe, Jacob. Mentioned 131, 132
Blair, Francis P. Mentioned 503, 504, 594
Blakistone, John, jr. Mentioned 5
Blakistone Island. Damage done to light-house on. Report of Foxhall A. Parker 433
Bland, Robert. Mentioned 313
Blockade of Southern ports.
Communications from
Brewster, Jacob 753
Guyer, William A 746
Harrington, George 720
Lowry, R. B 688
Navy Department, U. S 689, 719, 746, 753, 766, 786
Rodney, T. M 720
Stringham, S. H 622, 625, 682, 732
Wilson, Peter 766
Orders and instructions.
Navy Department, U. S 619, 621-624, 626, 641, 660, 661, 677, 686, 696, 701
Stringham, S. H 640, 671
Proclamation of President, U. S 620, 621
Reports of
Pendergrast, G. J 793
Stringham, S. H 662, 664, 682, 691, 726
Raising of.
Orders and instructions.
Navy Department, U. S 568
Parker, Foxhall A 570, 571
President, U. S 568
Report of Edward Hooker 570, 572
Blockade runners.
Movements of.
Advertisement in Gere's General Advertiser, of Liverpool 752
Communications from
Brewster, Jacob 753
Grimshaw, A. H 748

Blockade runners—Continued. Page.
Movements of.
Communications from
Guyer, William A 746
Liverpool, U. S. vice-consul at 776, 783
London, U. S. consul at 778
Navy Department, U. S 746, 751, 754, 756, 757, 761, 775, 778, 781, 782
Peterson, J. C 782
St. Petersburg, U. S. consul at 757
State Department, U. S 752, 776, 778
Wilson, Peter 766
Report of J. W. Livingston 767
Search for. Orders and instructions.
Navy Department, U. S 721, 735
Pendergrast, G. J 737
Blossom, Sloop. Capture of 62
Blount, S. E. Mentioned 652
Boenigker, Herman. Mentioned 320
Boggs, Ely M. Mentioned 701
Bold, C. M. Mentioned 652, 653
Bold, H. E. Mentioned 652, 653
Bold, J. W. Mentioned 652, 653
Bonille, George T. Mentioned 151
Booth, John J. Mentioned 376
Booth, John Wilkes. Mentioned 556, 558, 563
Booth, Oliver H. Mentioned 40
Boothe, Pilot. Mentioned 486
Boozby, William. Mentioned 344
Borden, Hiram C. Mentioned 301, 412, 466
Boss, Robert I. Mentioned 452, 453
Botts, John Minor. Mentioned 295
Boush, George R. Mentioned 660
Bowie, Wallace A. Mentioned 536
Bowie, Walter A. Mentioned 96, 110
Bowles, John R. Mentioned 40
Bowman, Isaac. Mentioned 345
Boyce, Captain. Mentioned 355
Boyce, Patrick. Mentioned 550
Boyd's Hole, Va.
Confederate battery at. Report of R. H. Wyman 7
Reconnoissance of. Report of A. A. Harwood 354
Bradmar, John. Mentioned 5
Bradshaw, H. R. Mentioned 86, 94
Brain, Ezekiel W. Mentioned 376
Brainard, John. Mentioned 698
Braine, Daniel L.
Correspondence with
Navy Department, U. S 713
Pendergrast, G. J 737
Mentioned 645, 671, 672, 719, 737, 744, 788, 789
Reports of.
Monticello, U. S. S. Condition of 695, 711, 789
Peterson, Augustus. Death of 739
Rappahannock River. Affair on, between U. S. S. Monticello and Confederates 738

Braine, Daniel L.—Continued. Page.
Reports of.
Refugees. Information received from 747
Sewell's Point, Va. Engagement between U. S. steamers Monticello and Thomas Freeborn and Confederate battery at 645
Braine, John C. Capture of schooners St. Mary's and J. B. Spafford by party under 540
Brandywine, U. S. frigate. Mentioned 26, 28, 29
Brandywine Hill. Engagements at, December 10 and 11, 1862. Reports of
Harwood, A. A 190, 194
Johnson, Henry 192
Linnekin, T. J 192, 195
Magaw, Samuel 191, 195
Provost, Nelson 193
Sheridan, Philip 194
Street, William T 193
Turner, James W 193
Brasher, Thomas M. Mentioned 678
Braxton, John. Mentioned 365
Brayton, James B. Mentioned 305
Breese, Samuel L. Mentioned 634, 638, 684, 730
For correspondence, see *Navy yard, New York, Commandant of.*
Brewster, General. See *General Brewster, Steamer.*
Brice, John J.
Mentioned 45, 78, 105, 133, 135, 137, 144, 204, 317, 356, 485, 486, 535, 536, 594
Report of reconnoissance in Piankatank River, Virginia 45
Brickman, J. Mentioned 239
Brier, James. Statement concerning Confederate affairs 504
Bristow, John. Mentioned 86
British Ownership. Transfer of American vessels to.
Extract from instructions to British consuls under merchant shipping act 760
Communications from
Navy Department, U. S 759
Treasury Department, U. S 759
Wilson, Peter 766
Brookbank, Benjamin. Mentioned 104
Brooks, Beverly. Mentioned 146
Brower, Captain. Mentioned 720
Brown, Dr. Mentioned 5
Brown, Charles H.
Mentioned 146, 151, 153, 205, 228-230, 243, 244
Reports of.
Emily Murray, Schooner. Capture of 229
Griffen, James T. Information received from 143
Gwynn's Island, Virginia. Expedition to 147
Port Royal, Va. Engagement at, December 4, 1862 184
Brown, J. Thompson. Mentioned 188
Brown, John. Mentioned 309
Brown, John H. Mentioned 167
Brown, Lewis A.
Mentioned 738, 739
Report of affair on Rappahannock River between U. S. S. Monticello and Confederates 739
Brown, Robert. Mentioned 146
Brown, S. Lockwood. Correspondence with captain of John Warner 298

Page.
Brown, Simon. Mentioned 545
Brown, Thomas. Mentioned 333, 336, 338
Brown, William. Mentioned 350
Browning, R. W. Mentioned 161
Bruce, David. Correspondence with G. J. Pendergrast 710
Bryan, Joseph. Correspondence with Navy Department, U. S 26
Bryan, Margaret. Mentioned 685
Bryant, Nathaniel C. Mentioned 631, 637, 714, 749
Buckley, Captain. Mentioned 505
Buckley, John T. Mentioned 372
Buckley, T. Mentioned 536
Buckskin, Sloop. Destruction of 492
Budd, Thomas A. Mentioned 785
Buell, M. C. B. Report of capture of tug Titan, and attack on telegraph office at Cherrystone 399
Buford, John. Mentioned 327
Bunch, Robert. Mentioned 692, 726
Burch, G. C. Mentioned 67
Burch, H. Mentioned 67
Burhans, L. Report of condition of U. S. S. Dawn 724
Burke, John. Mentioned 303
Burley, Bennett G. Mentioned 423, 424
Burnett, George. Mentioned 291, 293
Burnett, James G. Mentioned 321
Burnside, Ambrose E.
Correspondence with Navy Department, U. S 68, 70, 72, 73, 76, 164, 165
Mentioned 65–67, 72, 73, 75, 78, 163, 168–171, 173–178, 182, 190, 195, 198–200, 202–204, 206, 213, 588
Burnside, General. See *General Burnside, Steamer.*
Burrows, S. B. Mentioned 382
Burt, Cramer. Mentioned 781
Burton, John W. Mentioned 40
Bush River Bridge, Maryland. Measures for protection.
Communications from Foxhall A. Parker 471
Orders and instructions.
Harwood, A. A 292
Navy Department, U. S 292, 459, 547
Taylor, James 460
Reports of
Eastman, Thomas H 460
McConnell, George E 466
Mintzer, F. W 550
Parker, Foxhall A 460
Street, William T 462, 463, 465, 466, 471
Butler, Benjamin F.
Correspondence with
Parker, F. A 413
Pendergrast, G. J 674, 679, 700, 706, 730
Townsend, Edward D 458
White, Frank J 413
Mentioned 383, 385, 391, 392, 404, 405, 413, 414, 488, 642, 662, 665, 674, 675, 679, 694, 698, 706, 708, 712, 719, 745, 750, 774, 779
Report of capture of tug Titan 401
Butler, John. Mentioned 660

Page.
Butler, John H. Mentioned 148, 149
Butler, Joseph, Mentioned 113
Butler, Thomas. Mentioned 179
Butler, William. Mentioned 368
Butt, E. A., Mrs. Mentioned 685
Butterfield, Daniel.
Correspondence with S. Magaw 235, 259, 282
Mentioned 259, 260
Byers, John. Mentioned 727
Bythewood, Benjamin R. Deposition concerning prize ship A. B. Thompson. 652
C. F. Ward, Lifeboat. Capture of 125–127
Cactus, U. S. S. Relieved from duty in Potomac Flotilla 567, 574
Cadwalader, John. Correspondence with Lewis C. Sartori 731
Cahaba, Steamer. Mentioned 635
Cambridge, Steamer. Assistance rendered bark Young Greek 790
Cameron, S. F. Mentioned 231
Camey, John W. Mentioned 153
Camilla, * Yacht. Movements of 735
Campbell, J. Mentioned 127
Campbell, N. L. Report of casualties on board of U. S. S. Harriet Lane, resulting from engagement with Pig Point battery 698
Canby, Edward R. S. For correspondence, see *War Department, U. S.*
Candy, Charles. Correspondence with Samuel P. Heintzelman 224
Cantatore, Mrs. Mentioned 9
Cape Henry, Va. Necessity for occupation of. Report of S. H. Stringham .. 649
Capitola, Sloop. Capture of 153, 154
Care, Samuel. Statement of loss of barges J. C. Davis and Liberty 216
Carolina, Steamer. Mentioned 635
Caroline Anderson, Schooner.
Destruction of 273
Mentioned 581
Carpenter, James N. Mentioned 267, 351, 577
Carr, Overton.
Correspondence with
Farrer, Solon 713
Pendergrast, Garrett J 718
Mentioned 701, 713, 759, 769, 774
Report of attack upon boat party from U. S. S. Quaker City by Confederates 742
Carrick, W. Swing. Mentioned 307
Carrico, Joseph L. Mentioned 95, 96, 110, 111
Carrington, Edward C. Mentioned 98
Carroll, Jane. Mentioned 685
Carroll, John. Mentioned 280, 284
Carter, ——. Mentioned 354
Carter, Mr. Mentioned 548
Carter, Hiram. Mentioned 452, 453
Carter, Jesse M. Mentioned 613
Carter, Robert R. Correspondence with Robert E. Lee 808
Carter, T. H. Mentioned 187
Carter's Creek, Virginia. Expedition into. Reports of
Hooker, Edward 403, 415
Parker, Foxhall A. 414

* Formerly America.

Page

Carvelle, John. Mentioned 231
Casco, U. S. S. Relieved from duty in Potomac Flotilla 567, 574
Case, Augustus Ludlow.
Mentioned 140, 157, 660, 774
Report of disrespect shown to flag of truce by Confederates 771
Statement of burning of ship Alleghanian 140
Case, Charles. Mentioned 249
Cassandra, Schooner. Capture of 299–302
Cassin, W. D. Mentioned 231
Castle Thunder, Richmond, Va. Escape of prisoners from. Report of A. A. Harwood 375
Catherer, Mrs. Mentioned 486
Catherine, Schooner.
Capture of 674
Mentioned 675, 680
Catherwood, Thomas B. Mentioned 653
Cecil, Steamer. Mentioned 635
Cedar Point, Va. Guns and equipment for battery at. Orders and instructions commandant Norfolk navy yard 811
Chalmers, William H. Mentioned 85
Chamberlain, Charles. See *Charles Chamberlain, Steamer.*
Chamberlin, Steamer.
Chase of 12
Mentioned 7, 14
Chambers, James S.
Correspondence with Andrew A. Harwood 170
Mentioned 169
Chambliss, John R, jr. Mentioned 413
Champanero, Schooner. Seizure of 538
Chandler, Captain. Mentioned 505
Chandler, D. T. Mentioned 231
Chandler, Ralph. Mentioned 722, 733, 784
Chandler, William.
Correspondence with Albert W. Reynolds et al 724
Mentioned 628, 630, 670
Reports of
Dawn, U. S. S.
Condition of 723, 736, 765, 769
Movements of 732
Chandler, Zachariah. Mentioned 644
Chapel Point, Schooner. Mentioned 93
Chapelear, George. Mentioned 243
Chaplin, J. E. Mentioned 653, 658
Chaplin, James C. Mentioned 575
Charity, Schooner. Mentioned 581
Charles Chamberlain, Steamer. Mentioned 523, 526, 586
Charles Henry, Schooner. Mentioned 592
Charleston, S. C.
Blockade of. See *Blockade of Southern ports.*
Movements of United States vessels to and from 727
Vessels employed in and about 634
Chase, Provost-Marshal. Mentioned 600
Chase, Salmon P. Mentioned 765
For correspondence, see *Treasury Department, U. S.*
Chatard, Mr. Mentioned 726
Chatard, Frederick. Mentioned 25

Page.
Chatham, Sutler's schooner. Seizure of 238
Chauncey, John S.
Correspondence with
Navy Department, U. S 764
Sewell, George 773
Stringham, Silas H 772
Reports of.
Susquehanna, U. S. S.
Condition of 772
Offer of rifled cannon for 743
Cherrystone Inlet.
Protection of Government property at.
Orders and instructions, Edward Hooker 514
Report of William F. Shankland 514
Raid on. See *Titan, Tug. Capture of.*
Chester, Steamer. Mentioned 785
Chicomuxen Creek, Virginia. Necessity for armed launch at. Report of R. H. Wyman 11
Chimo, U. S. S.
Mentioned 558
Relieved from duty in Potomac Flotilla 567, 574
Chinn, Colonel. Mentioned 223
Chisholm, Thomas. Mentioned 695, 723
Chouan, Colonel. Mentioned 223
Christian, Joseph. Statement of affair between U. S. S. Monticello and Confederates on Rappahannock River, June 24, 1861 740
Christopher, Riley. Mentioned 223
Chum, W. B. Mentioned 40
Circus Point, Va. Expedition to. Report of Foxhall A. Parker 411
City of Richmond, Steamer. Mentioned 675, 677
Clagett, Maurice. Mentioned 227
Clankins, S. W. Mentioned 20
Clara Ann, Sloop. Capture of 308, 309
Clark, E. Mentioned 73
Clark, Wensel. Mentioned 365
Clarke, ——. Mentioned 323
Clarke, Mr. Mentioned 65
Clarke, Frank. Mentioned 212, 253, 314, 591
Clarke, Robert M. Mentioned 349
Clary, W. F. Mentioned 377
Clay, T. W. Mentioned 345
Claybrook, Colonel. Mentioned 582
Clayton, Captain. Mentioned 306
Clayton, Edward. Mentioned 636, 637, 680, 716
Claytor, R. B. Mentioned 306
Clinch, General. See *General Clinch, Steamer.*
Clinch, Robert. See *Robert Clinch, Steamer.*
Cline, Sidney B. Mentioned 536, 596
Close, James H. Mentioned 485
Clum, Alfred. Mentioned 508
Coal, Supplies of.
Communications from Samuel Magaw 177
Orders and instructions.
Harwood, A. A 175, 176, 180
McCrea, E. P 181, 182, 206
Navy Department, U. S 87, 173, 174

Coal, Supplies of—Continued. Page.
Orders and instructions.
Parker, Foxhall A. 512, 514, 516
Taylor, James 504
Reports of
Harwood, A. A. 84, 169, 170, 173, 174, 178
Hooker, Edward 417, 513, 515
McCrea, E. P 170–173
McGowan, John, jr 207
Magaw, Samuel 78, 174
Street, William T 513
Coalie, William A. Mentioned 382
Coan River. Destruction of boats in. Report of Foxhall A. Parker 495
Cobb, Charles H. Mentioned 424, 457, 598
Cobb, Howell. See *Howell Cobb, U. S. schooner.*
Cocke, H. H. Mentioned 804
Cockpit Point, Va.
Abandonment of battery on. Report of R. H. Wyman 23, 25
Attack upon battery on, by U. S. steamers Anacostia and Yankee. Report of R. H. Wyman 15
Destruction of battery on. Report of Samuel Magaw 121
See also *Potomac River. Passage of Confederate battery on, by vessels of Potomac Flotilla.*
Code, Colonel. Mentioned 90
Cœur de Lion, U. S. S.
Abstract log, December 15, 1861, to June 2, 1865 580–583
Burning of schooners Odd Fellow and Sarah Margaret 285
Captures made by 228, 229, 243, 303, 306, 312, 321, 349
Destruction of boats on Coan River, Virginia 495
Engagement with Confederate batteries at Port Royal, Va., December 4, 1862 ..... 184, 191
Expedition to Gwynn's Island, Virginia 147
Guarding Gunpowder bridge, Maryland 294
Mentioned 28, 47, 75, 100, 129, 145, 146, 148, 151, 153, 161, 167, 171, 176, 178, 183, 185, 186, 189, 198, 200, 203, 205, 230, 244, 256–258, 260, 265, 267, 273, 281, 287, 304, 320, 362, 365, 367, 374, 380, 383, 408, 409, 426, 438, 496, 502, 506, 508, 531, 543–545, 558, 586, 587, 594, 599, 600, 607, 613
Movements of 37, 71
Operations, etc., in Potomac River 143, 158, 279
Orders for movements 296, 348
Relieved from duty in Potomac Flotilla 567, 574
Coffee, C. S. privateer. Capture of prize brig Hannah Balch 744
Coffin, Edwin. Correspondence with Navy Department, U. S. 540
Coggeshall, T. & J. Report of depredations committed by C. S. privateer Jefferson Davis 787
Cohen, Andrew J. Correspondence with David McM. Gregg 186
Colamer, A. W. Mentioned 233
Cole, Mr. Mentioned 597
Cole, Benjamin. Mentioned 146
Cole, Daniel J. Mentioned 166, 336, 337, 339
Coleman, Robert. Mentioned 522
Collier, R. R. Mentioned 648
Collins, John, jr. Mentioned 205, 220, 225, 231, 232
Collins, Napoleon. Mentioned 711
Colonel C. G. Sawtelle, Steamer. Mentioned 588

Page.

Colquitt, Peyton H. Report of engagement between U. S. steamers Monticello and Thomas Freeborn and Confederate battery at Sewell's Point, Va 647
Colton, Richard. Mentioned 80, 96, 111
Columbus, Steamer. Mentioned 582
Commodore Barney, U. S. S. Mentioned 464, 560
Orders for movements 286
Relieved from duty in Potomac Flotilla 567, 574
Commodore Foote, Steamer. Mentioned 422
Commodore Jones, U. S. S. Mentioned 323, 328-330, 592
Commodore Morris, U. S. S. Mentioned 328-330, 332, 592
Commodore Read, U. S. S.
Abstract log, September 8, 1863, to June 21, 1865 583-586
Arrival of, at Fortress Monroe with U. S. S. Atlanta in tow 467
Assistance rendered ship Old Dominion and schooner James McGee 569
Condition of 509
Cooperation with the Army in expeditions to
Fredericksburg, Va 522-524
Northern Neck of Virginia 442-451
Rappahannock River 527-531
Destruction of salt works in Shelton's Creek, Virginia 454, 455
Expeditions to
Dividing Creek, Virginia 455
York River, Virginia 532, 533
Mentioned 196, 361, 362, 367, 374, 377, 380, 381, 383, 384, 386-390, 402, 408, 409, 411, 425, 436, 437, 439-441, 452, 453, 456, 457, 463, 468, 474-477, 480, 482, 490, 496, 502, 506, 508, 510, 512, 514-518, 520, 521, 541, 543-546, 548, 549, 551-553, 555, 560-562, 564-567, 570-573, 593, 594, 596, 597, 599, 602, 604, 608, 611-613
Operations, etc.
In consequence of capture and destruction of steamer Harriet De Ford 545
In consequence of capture and destruction of U. S. picket boat No. 2 by Confederates 486-488
In Rappahannock River 526
Orders for movements 400, 461, 464, 465, 525, 542, 566, 573
Relieved from duty in Potomac Flotilla 574
Confederate States Authorities at Port Royal, Va. Correspondence with S. Magaw 200
Confederate Troops. Mentioned. Cavalry—Regiment: 2d, 457.
Conrad, Thomas N. Arrest of. Report of Foxhall A. Parker 555
Contrabands. See *Refugees, etc.*
Conway, Belle. See *Belle Conway, Schooner.*
Cook, Alfred. Mentioned 673
Cook, Charles L. Mentioned 81
Cook, Lewis G. Mentioned 422, 426, 429, 437, 496, 502, 506, 508, 523, 531
Cooke, B. Mentioned 114
Cooke, Henry S. Mentioned 336, 337, 344, 345
Cooke, J. C. Mentioned 114
Coop, Henry J. Mentioned 496, 502, 506, 508, 531
Cooper, Charles. Mentioned 309
Cooper's Point, Steamer. Mentioned 67, 73, 391
Copernicus, Bremen bark. Mentioned 692
Coquette, Schooner.
Capture of 490
Mentioned 344-346, 491

Page.
Corbin, Washington. Mentioned 354
Corey, David B. Mentioned 291
Cornish, Isaac. Mentioned 239
Corwin, U. S. Coast Survey steamer.
Mentioned 62, 80, 106
Operations, etc., in Potomac River 60
Cosby, Frank C. Mentioned 80
Cosden, Captain. Mentioned 466
Courtney, Bushrod B. Mentioned 81
Covington, S. Mentioned 483, 487
Cowan, Lemuel C. Mentioned 599
Crab, Vincent. Mentioned 161
Crabbles, Q. F., & Co. Mentioned 20
Cracroft, ———. Mentioned 96, 110
Craig, Robert B. Mentioned 520
Crandall, F. H. Mentioned 65, 235, 236
Crane, Andrew. Mentioned 130
Craney Island, Va. Guns and equipment for. See *Virginia. Preparations for defense of.*
Crange, John. Mentioned 489
Crange, William. Mentioned 489
Creighton, J. Blakeley.
Correspondence with Andrew A. Harwood 286
Mentioned 285, 286
Crisp, R. F. Mentioned 211
Critcher, John. Mentioned 245
Cropley, Samuel. Correspondence with Navy Department, U. S 10
Crosby, Peirce.
Mentioned 669, 775, 779, 788
Ordered to special duty 708, 712
Crossan, Thomas M. Mentioned 744
Croswell, Caleb. Mentioned 757, 763
For correspondence, see *St. Petersburg, U. S. consul at.*
Crowbar, Robert. Mentioned 486
Crowbar, Thomas. Mentioned 486
Crowell, L. Mentioned 632
Crump, Charles A. Correspondence with Joseph Christian 740
Crusader, U. S. S.
Mentioned 139, 398, 531, 533, 560, 607
Relieved from duty in Potomac Flotilla 567, 574
Crutchfield, Stapleton. Mentioned 259
Cubana, Teresa. See *Teresa Cubana, Spanish bark.*
Cully, R. Mentioned 127
Cumberland, U. S. sloop.
Mentioned 623, 626, 628, 630, 631, 635, 636, 659–661, 664, 665, 668–670, 672–675, 677–681, 683, 687, 690, 691, 693–697, 700, 701, 705–712, 716, 718, 719, 721, 722, 725, 730, 733, 734, 736, 737, 741, 753, 766–769, 774, 777, 781
Orders for movements 751
Report of Flag-Officer Stringham suggesting service for 648
Request of commanding officer of, to participate in retaking of Norfolk, Va 768
Suggestions of Flag-Officer Pendergrast concerning 640
Cundip, Mrs. Mentioned 41
Cunningham, Mr. Mentioned 247
Cunningham, Charles. Mentioned 308

Page.
Cunningham, J. H. Mentioned 491
Curley, Bowlin. Mentioned 250, 251, 605
Curran, Margaret. Mentioned 685
Currituck, U. S. S.
Abstract log, November 27, 1862, to January 14, 1865 587-593
Arrival of, at Aquia Creek, Virginia 71
Captures made by 208, 210-212, 215, 220-222, 253, 254, 270, 274-276, 284, 309, 318, 321, 368, 416
Destruction of salt works by 209, 210, 212
Engagement with Confederate battery at
Brandywine Hill, Va., December 10, 1862 ..... 191, 192, 194, 195
Port Royal, Va., December 4, 1862 ..... 183, 191
Mouth of Yeocomico River, Virginia 482
Examination of schooner George Washington 364
Expedition to Tappahannock, Va 277, 278
Hooker, E., appointed to command 357
Mentioned 75, 90, 91, 97-99, 112, 125, 128, 164, 165, 168, 171, 172, 176, 178, 179, 184-186, 189, 190, 202-205, 207, 217, 257, 260, 263, 265, 267, 268, 271, 273, 280, 281, 283, 287, 308, 310, 314, 323-325, 328, 329, 332, 334, 343, 351-353, 362, 366, 367, 369, 374, 378, 380, 382-384, 388, 389, 391, 393, 398, 402, 406-408, 417, 422-424, 427, 430, 431, 437, 441, 460, 481, 487, 496, 502, 506, 508, 531, 543, 544, 549, 567, 573, 580, 583, 596, 601, 602, 606, 607, 611
Operations, etc., in
Indian, Barnes, and Tapp's creeks, Virginia 223
Piankatank River, Virginia 223
Rappahannock River 269, 372, 429
Orders for movements 196, 201, 426
Curtis, Edwin M. Mentioned 766
Cushing, John. Mentioned 241
Cushing, John, jr. Mentioned 241
Cushing, William B. Mentioned 781
Custer, George A. Mentioned 282
Custis, G. W. Parke. Mentioned 715
Cuyler, R. R. See *R. R. Cuyler, U. S. S.*
D. C. Pearce, Bark. Aid afforded captain and crew of, by U. S. S. Minnesota. 632
Dade, F. B., Mrs. Mentioned 603
Dahlgren, John A. Mentioned 696
For correspondence, see *Navy yard, Washington, Commandant of.*
Dahlgren, Ulric. Mentioned 155
Daiger, Joseph. Mentioned 161
Dailey, Mr. Mentioned 5
Dale, U. S. sloop.
Mentioned 707, 754
Ordered to duty in Atlantic Blockading Squadron 710
Daley, Jeremiah. Mentioned 191, 192, 195
Daly, Charles. Mentioned 632
Dameron, Henry C. Mentioned 407
Dan Smith, U. S. schooner.
Abstract log, January 1, 1862, to July 28, 1863 593
Captures made by 199, 225-228, 230
Mentioned 159, 160, 174, 205, 206, 215, 216, 246, 260, 268, 298, 307, 332
Dan Webster, Steamer. Mentioned 120, 137, 138, 140
Dana, U. S. schooner.
Arrival of, at Philadelphia, Pa 51
Operations, etc., in Potomac River 4
Orders for movements 12

Page

Daniels, Ezekiel. Mentioned 577
Darrington, ———. Mentioned 297
Davidson, Mary. Mentioned 382
Davis, Andrew J. Mentioned 153
Davis, Benjamin F. Mentioned 200
Davis, Charles. Mentioned 584
Davis, Drury D. Mentioned 522
Davis, George R. Statement of loss of barges J. C. Davis and Liberty 215
Davis, Henry A. Correspondence with Navy Department, U. S 6
Davis, J. C. See *J. C. Davis, Barge.*
Davis, Jefferson. See *Jefferson Davis, C. S. privateer.*
Davis, Jefferson. See *President, C. S.*
Davis, Lady. See *Lady Davis, Steamer.*
Davis, Larking. Mentioned 120
Davis, Lewis. Mentioned 144
Davis, Neil. Mentioned 98
Davis, Perry. Mentioned 608
Davis, Raymond. Mentioned 219
Dawn, U. S. S.
Capture of schooners General Knox and Georgeana 670
Condition of 722–724, 728, 736, 765, 769
Mentioned 627, 630, 635, 661, 662, 664, 665, 682, 691, 706, 743, 750, 753, 768, 770, 774, 785
Movements of 628, 732
Dawson, William. Mentioned 582
Day, Benjamin F. Correspondence with commandant of Washington navy yard 571
Daylight, U. S. S.
Captures made by 762, 763
Mentioned 635, 662, 664, 707, 748, 750, 753, 755, 780, 791, 793, 795
Movements of 709, 716
Ordered to duty in Atlantic Blockading Squadron 687
Deagle, Isaac. Mentioned 452, 453
Deagle, William H. Mentioned 452, 453
Dean, Benjamin C.
Mentioned 159, 199, 205, 206, 214, 216, 225, 226, 230
Reports of.
Dan Smith, U. S. schooner. Captures made by 227
Urbana, Va. Shots fired over, by U. S. revenue steamer Hercules 160
Deas, George.
Correspondence with John Bankhead Magruder 740
Mentioned 811
Deavers, J. Mentioned 491
Deavers, J. C. Mentioned 491
Decey, Captain. Mentioned 735
Deer, William. Mentioned 586
De Ford, Benjamin. Mentioned 552, 553
De Ford, Harriet. See *Harriet De Ford, Steamer.*
Degen, H. Mentioned 144
De Krafft, James C. P.
Correspondence with Andrew A. Harwood 317
Mentioned 78
Report of arrest of blockade runners 318
Delano, James H. Report of movements of party of marines from C. S. ram Virginia 537

Page.
Delano, William. Mentioned 218, 219
Delaware, U. S. S.
Arrival of, at Aquia Creek, Virginia 71
Cooperation with the Army in expeditions up Rappahannock River 522–524, 527–531
Expedition to Potomac Creek 575
Mentioned 75, 92, 93, 95, 507, 521, 526, 532, 555, 566, 567, 573, 586, 604
Operations, etc., in
Port Tobacco River 94
Potomac River 83
Delaware Farmer, Schooner. Capture of 630, 637
Denfil, John. Mentioned 144
Dennis, John U. See *John U. Dennis, Schooner.*
Dent, Samuel. Mentioned 291
Dent, W. L. Mentioned 243
De Russy, René E. Correspondence with Garrett J. Pendergrast 635
De Treville, William J. Mentioned 652
Detroit, Steamer. Mentioned 308, 607
Dezburgh, James R. Report of condition of U. S. S. Harriet Lane 717
Diamond State, Steamer. Mentioned 688
Dickinson, Joseph. Mentioned 282
Dills, Mr. Mentioned 5
Dims, William. Mentioned 5
Dirham, Edward. Correspondence with Navy Department, U. S 6
District of Columbia Troops. Mentioned. Infantry—Regiment: 1st, 354, 595.
Dividing Creek, Virginia. Expedition to.
Letter of disapproval from Foxhall A. Parker concerning 457
Reports of
Hooker, Edward 455
Street, William T 456
Dixon, Mr. Mentioned 561
Dockray, William P.
Mentioned 205, 246, 257
Report of captures made by U. S. S. Reliance 165, 166, 168, 247
Doggett, William. Correspondence with Robert H. Wyman 41
Don, U. S. S.
Abstract log, May 16, 1864, to July 31, 1865 593
Assistance rendered U. S. transport steamer Nellie Pentz 485
Captures made by 497, 551
Cruise of 503
Destruction of houses on Fleet's Point, Great Wicomico River, and reconnoissance in Rappahannock River, Virginia 490
Dispersion of Confederates at Jones Bluff, Rappahannock River 521
Eastman, Thomas H., appointed to command 479
Mentioned 475, 477, 478, 482–484, 492–496, 502, 504, 506, 508, 510, 516, 518–520, 522, 525, 530–532, 534–537, 540, 542, 544, 547–550, 552, 555, 557–559, 563–567, 570, 571, 573–578, 585, 586, 599, 603
Orders for movements 498, 503, 507, 543
Dornin, Thomas A. Mentioned 122, 471
For correspondence, see *Naval station, Baltimore, Commandant of.*
Dorothy Haynes, Schooner. Examination of 19, 20
Dorsey, R. B. Mentioned 136
Dorton, Henry F. Report of burning of steamer Kingston 469
Doughty, Captain. Mentioned 273, 581

Page.
Douglas, Charles. Mentioned 290, 293
Douglass, John. Mentioned 105
Downes, John. Correspondence with Navy Department, U. S 463
Downing, Captain. Mentioned 94
Downing, Steamer. Mentioned 86
Downs, Ned. Mentioned 5
Dragon, U. S. S.
Abstract log, March 22, 1863, to March 27, 1865 594–596
Captures made by 265, 268, 290, 292, 396
Condition of 242
Engagement with Confederate battery near Fort Lowry, Va., February 21, 1863 ..... 235, 236
Mentioned 92, 105, 129, 170–172, 176, 178, 182, 205, 207, 246, 248, 256–258, 260–264, 267, 287, 322, 330, 348, 350, 352, 354, 360, 362, 367, 374, 380, 408, 422, 427, 429, 496, 502, 506, 508, 531, 549, 584, 591, 592, 601, 602
Operations in consequence of capture of steamers Satellite and Reliance 323, 328, 329
Orders for movements 426, 504
Relieved from duty in Potomac Flotilla 567, 574
Rumored attack upon 189, 190
Drake, F. A.
Correspondence with Navy Department, U. S 703
Mentioned 730
Draper, Alonzo G.
Correspondence with
Eastman, Thomas H 442
Hooker, Edward 453
Parker, Foxhall A 450
Mentioned 422–424, 433, 443–447, 449–451, 612
Drew, Charles H. Correspondence with
Hooker, Edward 555
War Department, U. S 555
Drury, Charles W. Mentioned 350
Drury, Samuel. Mentioned 350
Drury, William P. Mentioned 350
Dubbin & Pennyman. Mentioned 579
Dudley, William J. Mentioned 358
Dungan, Thomas M.
Mentioned 97, 159, 160, 483, 511
Report of shots fired over Urbana, Va., by U. S. revenue steamer Hercules. 158
Dunn, George. Mentioned 584
Dunn, W. A. Mentioned 399
Dunton, Louisa. Correspondence with Robert H. Wyman 42
Du Pont, Samuel F. Mentioned 731
Duryea, Abram. Mentioned 668
Dyson, Logan. Mentioned 536, 599
E. J. Petty, Schooner. Mentioned 604
E. H. Herbert, Tug. Discharge of, from service 14
E. Waterman, Schooner. Capture of 246, 247
Eagle, Henry.
Correspondence with
Braine, Daniel L 645
Pendergrast, Garrett J 672, 674
Stringham, Silas H 670, 671
Mentioned 631, 644, 662, 669, 671, 672, 676, 677, 784

Eagle, Henry—Continued. Page.
Reports of.
Monticello, U. S. S. Condition of 676
Prizes. Disposition of 680
Sewell's Point, Va. Engagement between U. S. steamers Monticello and Thomas Freeborn and Confederate battery at 644
Early, Charles. Mentioned 368
Early, Jubal A. Mentioned 458
See *Potomac Flotilla. Movements of, in consequence of raid of Confederate Army into Maryland under General Early.*
Eastman, Captain. Mentioned 369
Eastman, F. S. Appointed chief of staff of Potomac Flotilla 479
Eastman, Thomas H.
Appointed fleet captain of Potomac Flotilla 406
Correspondence with
Draper, Alonzo G 442
Hooker, Edward 419, 426, 427, 445, 451, 463, 474, 475
Navy Department, U. S 459, 556
Parker, Foxhall A 543
Street, William T 442
Mentioned 15, 21, 407, 410, 412, 425, 431, 439, 459, 461, 496, 502, 506, 508, 521, 531, 534, 536, 558, 559, 597
Relieved of duty as fleet captain of Potomac Flotilla 479
Reports of.
Don, U. S. S. Cruise of 503
Machodoc Creek, Virginia. Combined Army and Navy expedition to. 410
Mattox Creek, Virginia. Operations in 535, 536
Point Lookout, Md. Guarding prisoners at 435, 458
Potomac Flotilla.
Cooperation of, in movements of the Army of the Potomac 417, 426, 432–435
Movements of, in consequence of Confederate raid into Maryland under General Early 460
President, U. S. Search for assassin of 557
Satellite, U. S. S. Destruction of wreck of 439
Transports, U. S. Convoy and protection of 452
East River, Virginia. Expedition to. Report of R. H. Wyman 47
Echo, Brig. Mentioned 794
Eckert, Thomas T. Correspondence with
Buell, M. C. B 399
Navy Department, U. S 399
Edelen, Philip F. Mentioned 480
Edmunds, Eli D. Mentioned 370, 536
Edmunds, Page. Mentioned 299
Edward, British bark. Mentioned 714, 726
Edward, Mr. Mentioned 324
Edwards, Captain. Mentioned 584
Edwards, Mr. Mentioned 147
Elder, ——. Mentioned 327
Eldridge, Henry C. Mentioned 412
Eldridge, Joshua H.
Correspondence with William A. Arthur 555
Mentioned 527–529, 533
Reports of.
Potomac Creek. Expedition to, in search of buried torpedoes 575
Rappahannock River. Operations in 529
Satellite and Reliance, U. S. steamers. Capture of, August 23, 1863 ... 333

Page.
Eliza and Catherine, British schooner. Mentioned 692
Elizabeth River and Vicinity.
Defenses of. See *Virginia. Preparations for defense of.*
Obstructing of channel of. Orders and instructions, commandant Norfolk navy yard 809
Ella, U. S. S.
Abstract log, August 10, 1862, to August 24, 1863 596
Captures made by 560
Condition of 396
Mentioned 85, 100, 103, 108, 115–117, 138, 172, 173, 176–178, 180, 207, 208, 256, 258, 260, 262, 265, 267, 273, 274, 280, 281, 284, 287–289, 293, 296, 299, 300, 313, 316, 328, 329, 333, 351, 377, 391–394, 397, 400, 401, 403–405, 407–411, 413–416, 421, 436, 441, 442, 445, 449–452, 454, 457, 463–465, 469–471, 473, 496, 502, 506, 508, 531, 558, 567, 573, 574, 588, 600, 603
Ellery, Mrs. Mentioned 9
Elliott, Stephen, jr., et al.
Petition to share in proceeds of sale of ship A. B. Thompson 652–654
Mentioned 654–658
Elmor, Frances. See *Frances Elmor, Schooner.*
Emerson, Henry O. Mentioned 320, 321
Emily, Schooner.
Capture of 274–276
Mentioned 590
Emily Ann, Schooner. Capture of 630, 637
Emily Murray, Schooner. Capture of 228, 229
Emma, Steamer. Mentioned 635
Emory, L. M. Mentioned 377
Empire, Confederate steamer. Mentioned 799, 809, 810
Enchantress, Schooner. Capture of 794
Engel, J. L. Mentioned 153
Engram, James. Mentioned 358
Ernest Mercke, Swedish steamer. Communication of U. S. vice-consul at Liverpool concerning 776
Estep, John. Mentioned 96, 110
Etheridge, J. H. See *J. H. Etheridge, Schooner.*
Eubank, Captain. Mentioned 456, 457, 598
Eureka, Steamer. Capture of 37
Eureka, U. S. S.
Captures made by 124, 133, 135, 137, 144, 240
Condition of 515
Engagement with Confederates near Urbana, Va 412
Mentioned 34, 45, 64, 78, 99, 105, 119, 130, 131, 134, 136, 143, 154, 204, 248, 257, 258, 260, 267, 273, 317, 320, 321, 329, 374, 426, 437, 438, 447, 448, 496, 502, 506, 508, 531, 581, 583, 584, 593, 596, 597, 611
Euroth, L. Mentioned 632
Evans, Mr. Mentioned 378
Evans, Frank. Mentioned 211
Evans, Revel. Mentioned 40
Evans, Solomon. Mentioned 208
Evansport, Va. Abandonment of battery at. Report of R. H. Wyman 25
Everglade, Steamer. Mentioned 735
Ewell, James. Mentioned 223
Exchange, Schooner.
Capture of 209
Mentioned 588

Page.

Express, Steamer. Order of Commander Parker for investigation regarding detention of 403
F. U. Johnson, Schooner. Capture of 376, 377
F. W. Johnson, Schooner. Capture of 690, 695, 707, 708, 723
Faber, John C. Mentioned 240, 241
Fairchild, Josiah B. Mentioned 240
Fairfax, Archibald B. Correspondence with commandant of Norfolk navy yard 810
Fairy, U. S. S. Mentioned 478
Falcon, Schooner. Capture of 38
Farnham, H. N. See *H. N. Farnham, Schooner.*
Farragut, David G. Mentioned 504, 594
Farrell, Thomas M. Mentioned 683
Farren, ———. Mentioned 354
Farrer, Solon.
Mentioned 712
Reports of.
Quaker City, U. S. S. Condition of 713
Yankee, U. S. S. Condition of 707
Faunce, John.
Correspondence with
Campbell, N. L. 698
Dezburgh, James R 717
Navy Department, U. S. 627
Pendergrast, Garrett J 694, 733
Mentioned 631, 697, 716–718, 737
Reports of.
Hampton Roads, Va. Reconnoissance in vicinity of 697
Harriet Lane, U. S. S. Condition of 717
Pig Point, Va. Engagement between U. S. S. Harriet Lane and Confederate battery at 698
Fauntleroy, Charles M. Mentioned 805
Favorite, U. S. transport. Mentioned 447, 584, 585
Fedderman, Richard C. Mentioned 32, 33
Felix, Ambrose. Mentioned 223, 224, 591–593
Ferguson, Colin B. Mentioned 202, 206
Ferguson, John. Mentioned 115, 117
Fernandina, Fla. Blockade of 640
Fessenden, William P. Correspondence with Daniel Hood 649
Fifield, J. C. Mentioned 787
Fink, John F. Mentioned 228, 229
Finnegan, William. Mentioned 192
Fisher, Tug. Mentioned 273
Fisher, George F. Mentioned 144
Fisher, George P. Mentioned 746
Fisher, Jefferson. Mentioned 297
Fisher, Marvin P. Mentioned 351, 352, 354, 355, 595
Fithian, Edwin. Mentioned 500, 501
Fitzgerald, ———. Mentioned 345
Fitzgerald, William B. Mentioned 798, 800
Fitzhugh, T.
Capture of U. S. transport steamer Harriet De Ford by party under 541–546
Mentioned 147, 414–416, 509, 510, 548, 551
Fitzhugh, Thornton. Mentioned 144

Flag, U. S. S. Page.
Capture of brig Hannah Balch 731
Convoy to transport Iowa 686
Mentioned 711, 714, 726-728, 744, 753, 781
Ordered to duty in Atlantic Blockading Squadron 666
Flag of Our Union, Barge. Mentioned 216
Flag of truce. Disrespect shown to, by Confederates.
Communication from Navy Department, U. S. 783
Reports of
Case, A. Ludlow 771
Stringham, S. H. 774
Fleet's Point, Great Wicomico River. Burning of houses on. Report of Foxhall A. Parker 490
Flight, Schooner. Mentioned 581
Flippo, Mr. Correspondence with Edward Hooker 548
Florida.
Blockade of coast of. See *Blockade of Southern ports.*
Order raising blockade 568
Flowers, William. Mentioned 291
Flying Cloud, Sloop.
Capture of 282
Mentioned 283, 606, 607
Fog Point. Rumor of Confederate expedition to 476, 477
Fogg, L. G. Mentioned 597
Fogg, William H. Mentioned 332, 333, 339-341
Fontain, E. Mentioned 491
Foote, Andrew H. Mentioned 170, 179
Foote, Commodore. See *Commodore Foote, Steamer.*
Ford, N. Mentioned 5
Ford, Rufus K. Mentioned 487
Forrest, French.
Correspondence with
Jones, Warner T 141
Pegram, Robert B 699
Mentioned 802, 803
See also *Navy yard, Norfolk, Va, Commandant of.*
Forrest, William F. Mentioned 208
Fort Jackson, U. S. S. Mentioned 503
Fort Lowry, Va.
Armament of 805
Confederate arms at. Report of Edward Hooker 517
Engagement between U. S. S. Morse and Confederate battery near. Reports of
Hyde, George W 530
Lourie, J 531
Parker, Foxhall A 530
Engagement with Confederate battery near, February 21, 1863. Report of Samuel Magaw 235
See also *Rappahannock River. Expedition up the*, pp. 33-36.
Fortress Monroe, Va. Repair of U. S. vessels at. Communications from
Navy Department, U. S 721
Pendergrast, G. J 719
Foster, Amos P.
Mentioned 94, 95
Report of arrival of U. S. S. Satellite at Aquia Creek, Virginia 70
Foster, General. See *General Foster, Army gunboat.*

Page.
Foster, James R. Mentioned 358
Foster, John G. Mentioned 722
Fox, Gustavus V. Mentioned 263, 265, 325, 342, 418
For correspondence, see *Navy Department, U. S.*
Frances Elmor, Schooner.
Burning of 118, 119
Mentioned 346
Frank, A. J.
Correspondence with Andrew A. Harwood 233
Mentioned 9, 238, 239, 285, 302, 349
Reports of.
Music, Sloop. Capture of 349
Pointer, Sloop. Capture of 143
Franklin, George B. Mentioned 299
Franklin, Samuel R.
Appointed to command First Division Potomac Flotilla 99
Mentioned 87, 100
Franklin, William B. Mentioned 189, 195
Fraser, John, & Co. Mentioned 776
Fraser, Trenholm & Co. Mentioned 752, 776, 778
Frazer, William. Mentioned 291, 293
Frazier, Mrs. Mentioned 480
Frazier, John M. Correspondence with Governor of Maryland 56
Frazier, Nelson. Mentioned 339, 340
Fredericksburg, Va.
Affairs in vicinity of. Communications from Samuel Magaw 176, 177
Combined Army and Navy expedition to, March 6–8, 1865.
Orders and instructions, Foxhall A. Parker 522
Reports of
Hooker, Edward 523
Parker, Foxhall A. 521, 522
Concentration of Confederate forces near.
Reports of R. H. Wyman 25–27, 29–32
Statements of
Johnson, Charles H 30
League, John S 30
Cooperation of the Navy with the Army at. Communications from
Harwood, A. A. 213
Magaw, Samuel 213
Expedition to. Report of R. H. Wyman 37, 38
Freeborn, Thomas. See *Thomas Freeborn, U. S. S.*
Freeman, Lewis. Mentioned 145
Freestone Point, Va.
Attack upon Confederate pickets near. Report of R. H. Wyman 3
Expedition to. Report of W. G. Wright 127
Protection of building at.
Communications from Samuel Cropley 10
Orders and instructions, Navy Department, U. S. 10
Frenkle, A. Mentioned 219
Frick, William, jr. Mentioned 241
Frick & Ball. Mentioned 241
Fripp, M. W. Mentioned 652, 653, 658
Fuchsia, U. S. S.
Abstract log, August 8, 1863, to August 5, 1865 596–599
Boat expedition from, to Windmill Point, Va 364

Fuchsia, U. S. S.—Continued. Page.
Captures made by 368–370
Convoy to transports Keyport and L. Baker 434
Cooperation with Army in expedition to Northern Neck of Virginia 442–451
Disposition of property taken by crew of, from private residence 441, 442
Expeditions to
Carter's Creek, Virginia 415
Dividing Creek, Virginia 455
Machodoc Creek, Virginia 410
Milford Haven and Stutt's Creek, Virginia 484
Mill Creek, Virginia 423
Guarding Bush River bridge, Maryland 462, 463, 465, 466, 471
Mentioned 196, 347, 351, 362, 366, 367, 374, 402, 405, 408, 411, 417, 422, 424, 456, 457, 460, 476, 477, 482, 483, 485, 496, 502, 505, 506, 508, 531, 567, 574, 575, 583, 584, 592, 593, 601, 602, 611, 612
Operations, etc., in Rappahannock River 431, 436
Orders for movements 396, 400, 426, 431, 434, 437, 473, 474, 575
Fugitive Slaves. Correspondence requesting return of 40–43
Fuller, H. M. Mentioned 652, 653
Fuller, Robert M., jr. Mentioned 652, 653
Fuller, Robert M., sr.
Testimony concerning capture of ship A. B. Thompson 658
Mentioned 652
Furney, Edward. Mentioned 98
G. B. McClellan, Steamer. Mentioned 399, 400, 611
G. W. Green, Sloop.
Capture of 156
Mentioned 161
Gabrielson, Erick. Mentioned 219, 232
Gage, William L. Mentioned 211
Gahghasser, Charles. Mentioned 377
Gale, Amelia. Mentioned 632
Gale, C. Mentioned 632
Galena, U. S. S. Mentioned 540
Gallagher, Mr. Mentioned 525, 539
Gallagher, James. Mentioned 147
Gallagher, James. Mentioned 365
Gallagher, Mary. Mentioned 685
Gansevoort, Guert. Correspondence with
Hooker, Edward 476
Navy Department, U. S 325, 472
Weidman, John 330
Gardner, D. C. Mentioned 219
Gardner, D. S. Mentioned 104
Gardner, Joseph M. Mentioned 345
Gardy, Jacob. Mentioned 32, 365, 480
Garfield, Walter H.
Correspondence with Navy Department, U. S 497
Mentioned 501, 502
Garison, Lewis. Mentioned 491
Garland, Daniel. Mentioned 365
Garland, James. Mentioned 365
Garner, W. H. Mentioned 176, 178
Garnett, George W. Mentioned 397, 601
Garnett, R. S. Correspondence with Walter Gwynn 646

Page

Garnsey, E. H. Mentioned 233
Gazelle, Schooner. Mentioned 581
Geddes, Engineer. Mentioned 655
General Brewster, Steamer. Mentioned 611
General Burnside, Steamer. Mentioned 440
General Clinch, Steamer. Mentioned 635
General Foster, U. S. Army gunboat. Operations, etc., in Great Wicomico River, Virginia 487, 488
General Green, Bark. Capture of 700
General Knox, Schooner. Capture of 670
General Parkhill, Ship. Capture of 629
General Putnam, U. S. S. See *William G. Putnam, U. S. S.*
George, John M. Mentioned 318
George, William P. Mentioned 318
George, Zamuth. Mentioned 318
George and William, Schooner. Mentioned 596
George H. Berry, Schooner.
Examination of, by U. S. schooner William Bacon 87
Instructions from Commodore Harwood regarding 98
Report of Commodore Harwood regarding 102
George Mangham, U. S. schooner.
Captures made by 219, 225, 232
Mentioned 174, 205, 206, 217, 229, 231, 260
George Page, Confederate steamer.
Destruction of 23, 25
Mentioned 14, 26, 809
Movements of 13
Plan to capture 6
George Peabody, U. S. transport steamer.
Attack upon, while ashore opposite Mathias Point, Va., by Confederates. 305, 306
Mentioned 65, 600, 639, 690
George Washington, Schooner. Examination of 364
George Weems, Steamer. Mentioned 785
Georgeana, Schooner. Capture of 670
Georgetown, S. C. Imprisonment of U. S. collector and deputy collector of customs at. Communications from
Drake, F. A 703
Navy Department, U. S 702
Georgia.
Blockade of coast of. See *Blockade of Southern ports.*
List of guns sent from Norfolk navy yard to 806
Order raising blockade 568
Georgia Troops. Mentioned. Infantry—Regiment: 45th, 613; City Light Guards, 647, 648.
Georgiana, Schooner. Search for 785, 786
Georgiana, U. S. transport. Mentioned 612
Germain, Charles.
Correspondence with Garrett J. Pendergrast 668
Mentioned 631
Germantown, Ship. Mentioned 806, 808
Gerrard, George. Mentioned 267
Gersham, Mr. and Mrs. Mentioned 65
Gibbarr, James. Mentioned 138
Gibbes J. S. Mentioned 653

Page.
Gibbons, John. Mentioned 762
Gibbs, Captain. Mentioned 73
Gibson, ———. Mentioned 505
Gibson, William. Mentioned 51, 775
Gibson, William C. Mentioned 506, 508, 531
Gidding, John S., & Co. Mentioned 241
Gifford, Thomas H. Mentioned 701, 730
Gilchrist, R. C.
Correspondence with A. G. Magrath 650
Mentioned 652, 655, 657, 658
Gill, Robert S.
Correspondence with President, U. S 627
Mentioned 660
Gilley, J. T. Mentioned 20
Gilley, William L. Mentioned 531
Gillis, James H. Mentioned 361
Gillis, John P.
Correspondence with Daniel L. Braine 789
Mentioned 788
Reports of.
Monticello, U. S. S. Condition of 789
Monticello, U. S. S. Cooperation with the Army 768
Gilman, J. T. Mentioned 113
Girsh, M. Mentioned 155
Gisby, Scott. Mentioned 85
Glen Cove, Steamer. Mentioned 747, 748
Glisson, Oliver S.
Mentioned 526, 532, 734, 755, 767, 768
Report of affairs on Rappahannock River 787
Gloucester Point, Va.
Armament of Confederate battery at 804
Transfer of guns and equipment from, to Yorktown, Va. Communication from William C. Whittle 812
Godfrey, Thomas. Mentioned 632
Godon, Sylvanus W. Mentioned 504, 594
Goff, Captain. Mentioned 511
Golden Fleece, Vessel. Mentioned 778
Golden Leaf, Schooner.
Capture of 322
Mentioned 600
Golden Rod, Schooner.
Capture of 344
Mentioned 346
Goldsborough, Edmund K. Mentioned 67
Goldsborough, John R.
Correspondence with G. J. Pendergrast 795
Mentioned 690, 695, 696, 707, 711, 714, 728, 741, 742, 764, 781, 792
Report of capture of ship Amelia 729
Goldsborough, Louis M.
Correspondence with Navy Department, U. S 334
Mentioned 27, 28, 47, 50, 60, 72
Goldsmidt, Leon. Mentioned 123, 124
Goldsmith, John M. (?) Mentioned 433, 443, 448
Goodell, Mary. See *Mary Goodell, American ship.*

Page.
Goodrich, John Z. Correspondence with
Treasury Department, U. S 642
Tyler, John S 643
Goodrich, Washington. Mentioned 608
Goodridge, Mr. Mentioned 307
Goodwin, John. See *John Goodwin, American ship.*
Goodwyn, Matthew P. Mentioned 345
Gordon, Dr. Mentioned 34
Gordon, Steamer. Mentioned 794
Gordon, James B. Mentioned 683, 730, 784
Gordon, James H. Mentioned 154
Gordon, John. Mentioned 5
Gordon, Joseph R. Mentioned 730
Gormly, George M. Mentioned 16
Gough, T. W. Mentioned 5
Gould, Charles. Mentioned 104
Graham, Charles K. Mentioned 18, 406, 408
Granger, Brownell. Mentioned 272
Grant, Ulysses S. Mentioned 472, 504, 526, 528, 532, 534, 537, 578
Grapeshot, Sloop. Capture of 151
Gratitude, Schooner. Mentioned 592
Graves, George W. Mentioned 777
Gray, H. Y. Mentioned 652
Gray, James. Mentioned 318
Gray, James L. Mentioned 4, 5
Great Meadows, Va. Captures made at. Report of William T. Street 245
Great Wicomico River.
Burning of three houses on Fleet's Point. Report of Foxhall A. Parker 490
Engagement between U. S. S. Mercury and Confederates in. Report of Thomas Nelson 488
Green, Charles
Correspondence with
Navy Department, U. S 681
Pendergrast, Garrett J 722, 725
Mentioned 707, 721
Report of cruise of U. S. ship Jamestown from June 19 to July 3, 1861 763
Green, G. W. See *G. W. Green, Sloop.*
Green, General. See *General Green, Bark.*
Green, H. W. Mentioned 730
Greene, Paul. Mentioned 508
Greenwood, Mary. Mentioned 685
Gregg, D. McM. Report of engagement at Port Royal, Va., December 4, 1862 186
Gresham, James W.
Correspondence with Robert H. Wyman 42
Mentioned 741
Gresham, William. Mentioned 738
Greyhound, Steamer. Mentioned 470
Griffen, James T. Mentioned 143
Griffin, George B. Mentioned 506, 508, 531
Griffin, R. B. Mentioned 132
Griffiths, ——. Mentioned 279
Grimes, Curtis. Mentioned 162, 168
Grimes, Penny. Mentioned 162, 168
Grimshaw, A. H.
Correspondence with Navy Department, U. S 746
Mentioned 750

Page.
Grins, A. Mentioned 67
Gulick, Mr. Mentioned 349, 355
Gunpowder River Bridge, Maryland.
Burning of. Reports of
McConnell, George E 466
Parker, Foxhall A 465
Street, William T 462
Wallace, Lew 460
Measures for protection.
Orders and instructions.
Navy Department, U. S 292, 459, 547
Harwood, A. A 292, 294
Schulze, G. C 468
Reports of
Eastman, Thomas H 460
Morris, W. G 294
Parker, Foxhall A 460, 462, 463, 549
Gurge, William H. Mentioned 219
Guyer, John. Mentioned 289
Gwynn, Mrs. Mentioned 705
Gwynn, Walter.
Correspondence with
Colquitt, Peyton H 647
Lee, Robert E 646
Pendergrast, G. J 673
Mentioned 632, 672, 799
Report of engagement between U. S. steamers Monticello and Thomas Freeborn and Confederate battery at Sewell's Point, Va 646
Gwynn's Island, Virginia. Expedition to. Reports of
Brown, Charles H 147
McCrea, E. P 146
H. N. Farnham, Schooner.
Mentioned 643
Order of Secretary of the Navy concerning cargo of 642
Haack, Henry W. Mentioned 105
Hader, George. Mentioned 344
Hadley, Enery. Mentioned 161
Hahn, Jacob. Mentioned 249, 266, 280
Haines, Samuel. Mentioned 496, 502, 506, 508, 531
Haley, W. D. Mentioned 233
Hall, George B. Mentioned 589-592
Hall, Michael, Mrs. Mentioned 684
Hall, Moses. Mentioned 480
Hall, Theron E. Mentioned 271
Halleck, H. Mentioned 295
Halleck, Henry W.
Correspondence with
Meade, George G 327, 328
Navy Department, U. S 162
Schenck, Robert C 310
Wallace, Lew 460
Mentioned 162, 224, 310, 329, 417, 419, 434, 435, 554
Hallie Jackson, Brig.
Capture of 714
Mentioned 726, 727, 730, 749

Page.
Hallock, Isaac. Mentioned 412, 496, 502, 506, 536, 594
Hallowing Point, Va. Proposition of Caleb S. Wright to transport troops for capture of battery at 11
Hamilton, Ann. See *Ann Hamilton, Schooner.*
Hamilton, John. See *John Hamilton, Confederate schooner.*
Hamilton, Alex. Report of arrival of U. S. S. Cœur de Lion at Aquia Creek, Virginia 71
Hamlin, Hannibal. For correspondence, see *Vice-President, U. S.*
Hammitt, George. Mentioned 219
Hammond, William. Mentioned 81
Hampton Roads, Commanding Officer. Correspondence with
Hooker, E 513
Navy Department, U. S 556, 680, 721
Hampton Roads, Va. Reconnoissance in vicinity of. Report of John Faunce 697
Hampton, Schooner.
Capture of 209–212
Mentioned 588
Hampton, Wade. Mentioned 446, 449
Hancock, Winfield S. Mentioned 563
Hand, John. Mentioned 336
Hannah Balch, Brig.
Capture of 731
Recapture of, by C. S. privateer Coffee 744
Hannah M. Johnson, Schooner. Capture of 686
Hanon, Thomas. Mentioned 136
Hansiell, Warren. Mentioned 115, 117
Hanson, John (Colored). Mentioned 5
Hanson, John. Mentioned 83
Harbonner, John. Mentioned 660
Hardaway, Robert A. Mentioned 186–188
Harden, Pilot. Mentioned 45
Hardie, James A. Correspondence with Navy Department, U. S 425
Hardin,* Captain. Mentioned 36
Harding, John, jr. Mentioned 354
Harding, Lucius. Mentioned 354
Hardingham, Alfred. Mentioned 291, 293
Hardman, William. Mentioned 376
Hardwick, Hiram. Mentioned 83
Hardwick, James H. Mentioned 660, 685
Hardy, John. Mentioned 453
Harmon, William. Mentioned 179
Harper's Ferry. Defense of. See *Virginia. Preparations for defense of.*
Harrell, Abram D. Mentioned 784
Harriet De Ford, U. S. transport steamer.
Capture of, by Confederates under T. Fitzhugh.
Description of 543
Reports of
Hooker, Edward 546
Naval station, Baltimore, Commandant of 542
Sewall, F. D 541
Destruction of. Reports of
Hooker, Edward 545
Parker, Foxhall A 546

* Lieutenant Charles B. Hardy, Ninth Virginia Cavalry, was in that section of country at this time.

Harriet De Ford, U. S. transport steamer—Continued. Page.
Capture of, by Confederates under T. Fitzhugh.
Search for.
Orders and instructions.
Navy Department. U. S. 542
Parker, Foxhall A. 542-545
Reports of
Hooker, Edward 544
Parker, Foxhall A. 542, 544
Mentioned 547, 551-553, 599, 603, 613
Recovery of property captured on.
Communication from Navy Department, U. S. 552
Reports of
Hooker, Edward 551-553
Parker, Foxhall A. 551, 552
Harriet Lane, U. S. S.
Armament of 704
Captures made by 673, 674, 709
Condition of 19, 716-718, 733
Mentioned 4, 6-9, 13, 609, 626, 630, 631, 635, 648, 661, 662, 664, 665, 669, 671, 675, 682, 683, 691, 706, 725, 736, 746, 749, 753, 756, 812
Movements of 737
Operations, etc., in Potomac River 3
Orders for movements 13, 627, 694
Passage of Confederate batteries on Potomac River by 22, 23
Reconnoissance of Hampton Roads and vicinity June 4, and engagement with Confederate battery at Pig Point, Va., June 5, 1861 697-700
Harrington, George.
Correspondence with Treasury Department, U. S. 720
Mentioned 730
Harris, Captain. Mentioned 297, 607
Harris, Francis L. Mentioned 216, 217, 229, 230
Harris, J. B. Correspondence with Navy Department, U. S. 21
Harris, John. Mentioned 280, 284
Harris, John (Col. Comdt. U. S. M. C.). Mentioned 292
Harris, John G. Mentioned 491
Harris, Morgan E. Mentioned 67
Harris, Thomas. Mentioned 370, 597
Harris, Thomas A.
Correspondence with William T. Street 463
Mentioned 45
Harris, W. C. Mentioned 683
Harris, William. Statement concerning C. S. S. Patrick Henry 294
Harrison, George W. Mentioned 805
Harrison, James. Mentioned 313
Harrison, Napoleon B. Mentioned 764
Harrison, P. Mentioned 291
Harrison, Robert. Mentioned 138
Hart, George. Mentioned 331
Hartford, Richard F. Mentioned 536
Hartford, U. S. S. Mentioned 682, 683
Hartington, Lord. Mentioned 227
Harvey, John. Mentioned 452
Harwood, A. A.
Appointed to command Potomac Flotilla 82

Harwood, A. A.—Continued. Page.
Correspondence with
Babcock, William L 115, 116
Brown, Charles H 229
Creighton, J. Blakeley 286
Dean, Benjamin C 227
De Krafft, J. C. P 317
Dockray, W. P 165, 166, 168, 247
Frank, Andrew J 143, 233, 349
Franklin, Samuel R 99
Hays, Peter 125, 130, 207
Heintzelman, Samuel P 316
Hill, George E 290
Hooker, Edward 356–359, 363, 364, 369–373, 378, 379
Ives, Thomas P 87, 279, 289, 351, 355
Ives, Thomas P., et al 333
Jones, Hugh 312
Lee, Samuel P 358, 361
Linnekin, Thomas J 195, 201, 210–212, 215, 223, 253, 269, 353
McClellan, George B 109
McCrea, Edward P 89, 91, 92, 103, 112, 114, 124, 128, 129, 146, 156, 158, 170–172, 175, 202, 214, 217, 218, 234, 248, 255–257, 267, 273
McGowan, John, jr 179, 207
McPhail, J. L 365
Magaw, Samuel 59, 61, 63, 66, 69, 74, 78, 80, 84, 85, 100, 113, 119, 121, 123, 129, 142, 145, 162, 168, 174, 176, 177, 180, 182, 189, 190, 191, 195, 196, 198, 199, 200, 203, 206, 207, 213, 235–237, 242, 245, 248, 252, 255, 256, 260–263, 265, 268, 271, 272, 280, 281, 286, 292, 294, 295, 300, 302, 313, 315, 322, 323, 348, 361
Meigs, Montgomery C 233, 305
Mitchell, Judson 233
Morris, Henry W 17
Morris, William G 279, 294, 296, 321, 348
Navy Department, U. S 54–57, 59, 60, 62, 77, 81, 99, 101, 103, 107, 116, 140, 149, 164, 166, 196, 197, 202, 257, 261–263, 286, 292, 294, 315–317, 346, 351, 361, 371, 373, 380
Phelps, Thomas S 60, 106
Phinney, Alvin 88, 291, 308
Provost, Nelson 137, 326
Robinson, John F. D 277
Rogers, William P 87, 98, 346
Schulze, Gerhard C 298
Shubrick, William B 320
Smith, Thomas E 108
Street, William T 148, 239, 266, 317
Turner, James W 301
Van Boskirk, James 252
Wadsworth, James S 110
Wilkes, Charles 76, 84
Wright, Robert C 189, 190
Wright, William G 127
Wyman R. H 6
Instructions for government of Potomac Flotilla 150, 154, 204, 205
Mentioned 81, 82, 91, 97, 108, 109, 141, 148, 150, 181, 205, 219, 330, 335, 339, 343, 362, 366, 367, 374, 379, 380, 382, 384
Relieved of command of Potomac Flotilla 76, 379

Harwood, A. A.—Continued. Page.
Reports of.
Alleghanian, Ship. Burning of, by John Taylor Wood and party, October 29, 1862 138
Army, U. S. Measures to prevent desertions from 224, 356
Blockade. Resumption of 205
Blockade. Violations of 86, 95, 104, 109-111, 133, 360, 381
Boyd's Hole and Mathias Point, Va. Reconnoissance of 354
Brandywine Hill, Va. Engagements at, December 10 and 11, 1862 .. 190, 194
Castle Thunder, Richmond, Va. Escape of prisoners from 375
Coal, Supplies of 169, 170, 173, 174
Coal, Supplies of. Depot for 84
Confederate batteries. Destruction of, and capture of sloop Ann Squires 112-114
George H. Berry, Schooner. Movements of 102
George Peabody, U. S. transport. Attack upon, at Mathias Point, Va 305, 306
Henry Walcott, Schooner. Arrival of, at Washington navy yard in disabled condition 290
Hercules, U. S. revenue steamer. Granting of passes by commanding officer of 378
J. C. Davis and Liberty, Barges. Destruction of, and rescue of crews. 216
Leslie, U. S. S. Movements of 155
Lower Shipping Point, Va. Destruction of magazines at 105
Mathias Point, Va. Examination of 350, 352
Mathias Point, Va., and Maryland shore. Signaling between 360
Milford Haven Creek. Burning of schooner in, and grounding of U. S. revenue steamer Hercules 352
Orders. Receipt of 83, 296
Piankatank River, Virginia. Affairs in 362
Point Lookout, Md. Guarding prisoners at 347, 377
Potomac Flotilla.
Affairs in 93, 95, 178, 283, 365
Captures made by. 83, 85, 87, 94, 97, 104, 105, 112-114, 117, 121, 123-127, 131-137, 143-146, 150-155, 160-162, 167, 169, 199, 208-212, 218-222, 225, 226, 228, 230-232, 238-241, 243, 246, 250, 253, 254, 265, 268-271, 273-275, 283-285, 288, 289, 291, 293, 295, 296, 299, 300, 302-304, 308, 309, 313, 320-322, 349, 367, 376
Condition of vessels of 142, 307
Cooperation with the Army in Rappahannock River 165
Distribution of vessels of 259, 260, 287, 366, 367
Precautionery measures against attack upon vessels of 157, 310
Tour of inspection of 319
Regulations governing fishing in 247
Rappahannock River.
Affairs in 258, 314
Withrawal of vessels from 256
Refugees, Disposition of 310, 311
St. George's Island. Expedition to 375
Satellite and Reliance, U. S. steamers. Capture of, August 23, 1863. 324-326, 328, 331-333
Scouts, Union. Detention of 298
Starrett, G. Removal of family of, from Virginia 355
Urbana, Va. Shots fired over, by U. S. revenue steamer Hercules 159
Virginia.
Movements of Confederates in 368
Unprotected condition of eastern shore of 360

Page.
Harwood, James K. Mentioned 678, 695, 696
Hatch, William. Mentioned 116
Hatteras Inlet, N. C. Engagement between U. S. S. Roanoke and Confederate battery at. Report of G. J. Pendergrast 791
Haupt, Hermann. Correspondence with Navy Department, U. S 226
Havener, Captain. Mentioned 794
Havens, Joseph A. Mentioned 280, 424, 496, 502, 506, 508, 531, 591
Havre de Grace, Md. Measures for protection of ferry at.
Orders and instructions, Navy Department, U. S 290
Report of A. A. Harwood 290
Haxall, Vessel. Mentioned 696, 708
Haxter, R. Mentioned 155
Hayes, ———. Mentioned 742
Haynes, Dorothy. *See Dorothy Haynes, Schooner.*
Hays, Peter.
Assumes command of U. S. S. Satellite 91
Correspondence with Foxhall A. Parker 533
Mentioned 145, 152, 182, 203, 204, 531, 533
Reports of.
Blakistone Island. Taking of refugee from 125
Crane, Andrew. Loss of, from U. S. S. Satellite 130
Piankatank River. Destruction of schooner in 207
Hazard, Charles. Mentioned 747, 748
Hazel, James. Mentioned 350
Hecht, Coleman. Mentioned 219
Heintzelman, Samuel P.
Correspondence with
Candy, Charles 224
Harwood, A. A 316
Mentioned 28, 224, 298
Heliotrope, U. S. S.
Abstract log, April 24, 1864, to June 12, 1865 599
Cooperation with the Army in expedition to Fredericksburg, Va 522–524
Mentioned 506, 508, 531, 544, 545, 549, 553, 567, 574, 583, 586, 613
Operations in Mattox Creek, Virginia, March 16–18, 1865 534–537
Orders for movements 514
Helming, James. Mentioned 145
Hemsworth, Mary. Mentioned 685
Henderson, Captain. Mentioned 551–553
Henderson, James L. Mentioned 804
Henry, Charles. See *Charles Henry, Schooner.*
Henry, John F. Mentioned 333
Henry Wolcott, Schooner. Assistance rendered, by U. S. S. Satellite 290
Hepenstall, James, et al.
Correspondence with President, U. S 627
Mentioned 660
Herbert, Tug. See *E. H. Herbert, Tug.*
Herbert, George H. Mentioned 67
Herbert, H. Correspondence with commandant of Norfolk navy yard 809
Hercules, U. S. revenue steamer.
Attack upon, by Confederates while ashore in Great Wicomico River, Virginia 354
Mentioned 58, 97, 98, 285, 352, 353, 372
Passes and permits issued by commanding officer of 378
Seizure of schooner Ann Hamilton 392
Shots fired by, over Urbana, Va 158–160, 172, 179, 21

Page.
Herold, David E. Mentioned 563
Herring Creek, Virginia. Trunks found in. Report of E. P. McCrea 158
Herring, William J. Mentioned 471
Hetzel, U. S. S. Mentioned 526, 527
Hewitt, T. B. Mentioned 349, 350
Hewitt, Thomas. Mentioned 8
Hiawatha, British bark.
Mentioned 684
Seizure of 659
Hicks, Captain. Mentioned 733
Hicks, Thomas H. See *Maryland, Governor of.*
Highland Light, Steamer. Rumor of plot to seize 547
Hiland, J. Mentioned 46
Hill, Ambrose P. Mentioned 358
Hill, Daniel H. Report of engagement at Port Royal, Va., December 4, 1862. 186, 188
Hill, George E.
Mentioned 205, 258, 265, 268, 292, 350-352, 354, 360, 406, 416, 595
Reports of captures made by U. S. S. Dragon 265, 290
Hill, John A. Mentioned 227
Hill, John O. Mentioned 307
Hinks, Edward W. Mentioned 410
Hinks, Samuel. Mentioned 762, 763
Hinly, Simon. Mentioned 153
Hitchcock, Mrs. Mentioned 475
Hitchcock, E. D. Mentioned 475
Hitchcock, Ethan A. Mentioned 347
Hoar, David A. Mentioned 536
Hodges, C. R. Mentioned 67
Hodges, H. B. Mentioned 156, 161
Hodges, J. Mentioned 298
Hodges, J. Wilson. Mentioned 158, 167
Hodgkinson, William F. Mentioned 496
Hodson, Daniel W. Mentioned 90
Hoe, William D. Mentioned 146
Hoffman, Henry W. Mentioned 746
Hoffman, William. Correspondence with
War Department, U. S 438
White, Frank J 476
Hogan, Edward K. Mentioned 272
Hoge, Francis L. Mentioned 336, 337, 344, 345
Holden, James. Mentioned 222
Holliday, Thomas N. Mentioned 376
Hollins, George N. Appointed to command naval defenses of James River ... 811
Holmes, Mr. Mentioned 351
Holmes, John. Mentioned 648
Holmes, Theophilus H. Mentioned 31, 579
Hood, Daniel.
Correspondence with William P. Fessenden 649
Mentioned 651
Hood, John B. Mentioned 740
Hooker, Edward.
Appointed to command
First Division Potomac Flotilla 393
Second Division Potomac Flotilla (temporarily) 356
Commendatory letter from Foxhall A. Parker, regarding 574

Hooker, Edward—Continued. Page.
Correspondence with
Arthur, William A 455, 486, 489, 556
Draper, Alonzo G 453
Drew, Charles H 555
Eastman, Thomas H 419, 426, 427, 434, 445, 451, 463, 474, 475
Eldridge, Joshua H 529
Flippo, Mr 548
Gansevoort, Guert 476
Hampton Roads, Commanding officer of 513
Harwood, A. A 357, 370–373, 379
Hyde, George W 530
Little Ada, U. S. S., Commanding officer of 566
Nansemond, U. S. S., Commanding officer of 566
Naval station, Norfolk, Va., Commandant of 513
Nelson, Thomas 487, 488, 508, 511, 522
Parker, Foxhall A 386, 389–391, 396, 397, 400, 404, 407, 411, 413, 420, 431, 437, 441, 464, 465, 479, 483, 507, 519, 522, 525, 542–544, 548, 563, 564, 571, 573
Schulze, G. C 405, 406
Shankland, William F 514, 517, 529
Street, William T 369, 370, 423, 441, 443, 456, 534
Taylor, James 461, 474, 514
Thomas Freeborn, U. S. S., Commanding officer of 565
Mentioned 362, 363, 366, 368, 371–373, 375, 378, 380, 390, 396, 401, 419, 420, 422, 427, 429, 431, 436, 437, 444, 450, 452, 454, 481, 496, 502, 506, 508, 512, 523, 531, 533, 570, 574, 586, 601
Relieved of command of First Division Potomac Flotilla 566
Reports of.
Army of the Potomac. Cooperation of Potomac Flotilla in movements of 426–430, 434, 435, 439
Blockade. Breach of 560
Carter's Creek, Virginia. Expedition into 403, 415
Coal, Supplies of 512, 515
Commodore Read. Arrival of, at Fortress Monroe, Va., with U. S. S. Atlanta in tow 467
Confederate forces. Movements of 369, 395, 414, 457, 468, 475–477, 480, 510, 516, 541
Deserters. Information received from 358
Dividing Creek, Virginia. Expedition to 455
Fort Lowry and Jones Point. Confederate arms at 517
Fredericksburg, Va. Combined Army and Navy expedition to 523
George Washington, Schooner. Examination of 364
Harriet De Ford, U. S. transport.
Capture of 546
Destruction of 545
Recovery of property captured on 551–553
Search for 544
Hercules, U. S. revenue steamer. Granting of passes by commanding officer of 378
Mathews County, Va. Proposed raising of United States flag in 561
Mill Creek, Virginia. Combined Army and Navy expedition to 422
Piankatank River. Affairs on 363, 372
Picket boat No. 2. Capture and destruction of 486
Potomac Flotilla.
Affairs of 359, 405
Captures made by 387, 452, 518, 520

Hooker, Edward—Continued. Page.
Reports of.
Potomac Flotilla.
Cooperation of, in the movements of the Army of the Potomac.. 526, 527
Distribution of vessels of
First Division..... 562
Second Division..... 366, 374, 380
Supplies for..... 474
Rappahannock River. Proposed reconnoissance in 402
Shelton Creek, Virginia. Destruction of salt works on..... 454
Ship Old Dominion and schooner James McGee. Assistance rendered.. 569
Tiger, U. S. revenue cutter. Assistance rendered..... 517
Titan, Tug. Capture and destruction of 398
Trade. Opening of ports to, within limits of Potomac Flotilla 572
Urbana, Va. Reconnoissance near 403
Virginia, Northern Neck of.
Cooperation of the Navy with the Army in expeditions to..... 388, 444–449, 451
Proposed cooperation of the Navy with the Army in expedition to 382-384
William G. Putnam, U. S. S. Attack upon..... 417
Wolf Trap light-ship. Finding of, at Hampton Roads, Va., and other matters..... 509
York River, Virginia. Expedition to..... 532, 533
Hooker, Joseph.
Correspondence with
Magaw, S..... 236
Williams, Seth..... 13
Mentioned..... 11, 13, 14, 17, 21, 25, 235, 247, 255, 256, 257, 259–263, 265, 281, 284, 414
Hooper, John H. Mentioned..... 280, 284, 285
Hough, Robert. Mentioned..... 241
Hovey, Christopher P. Mentioned 611
Howard, Michael. Mentioned..... 138
Howard, William A. Correspondence with Treasury Department, U. S..... 704
Howard, William E. Mentioned..... 685
Howell, Augustus. Mentioned 136
Howell Cobb, U. S. Coast Survey schooner.
Arrival of, at Philadelphia, Pa..... 51
Mentioned..... 9
Howland, Elijah K. Mentioned 496, 502, 506
Hubbard, John. Mentioned..... 239
Hudgins, Albert G. Mentioned..... 345, 744
Hudgins, Lewis. Mentioned..... 139, 146, 484
Hudgins, Robert. Mentioned 546
Hudson, C. B. Mentioned..... 302
Hudson, J. C. Mentioned 302
Hudson, James. Mentioned..... 545
Hudson, William L. Mentioned 617, 781
Hugel, Adolph. See *Adolph Hugel, U. S. schooner.*
Huger, Benjamin.
Correspondence with
Lee, Robert E..... 802
Pendergrast, Garrett J..... 679, 694, 705
Mentioned..... 693, 694, 771, 774, 775, 800, 801, 810
Report of engagement between U. S. S. Harriet Lane and Confederate battery at Pig Point, Va..... 699

Page.
Hull, Joseph B.
Correspondence with Navy Department, U. S 734
Report of arrival of U. S. ship Savannah at Hampton Roads 795
Hunchbeck, Abram. Mentioned 243
Hungerford, John. Mentioned 81
Hunt, Richard. Mentioned 105
Hunt, Samuel. Mentioned 105
Hunt, William H. Mentioned 226-228, 230
Hunter, Thomas T.
Appointed to command defenses of Norfolk navy yard 798
Correspondence with
Fairfax, A. B 810
McBlair, William 800
Navy yard Norfolk, Commandant of 799, 810
Mentioned 800
Notice issued by, to refugees 660
Hunter, William. Mentioned 293
Huntsville, U. S. S. Mentioned 628
Hurdlen, ———. Mentioned 354
Hurl, Steamer.
Order of Flag-Officer Pendergrast concerning 737
Order of Navy Department concerning 721
Hurst, ———. Mentioned 354
Hurst, James. Mentioned 253, 254, 589
Hurt, Quartermaster. Mentioned 811
Hussey, F. A. Testimony concerning capture of ship A. B. Thompson 650
Hutchings, A. B. Mentioned 85
Hutchinson, Thomas C. Mentioned 135
Hyde, George W.
Correspondence with
Delano, James H 537
Lourie, John 531
McDaniel, Charles A 537
Nelson, Thomas 507
Mentioned 496, 502, 504, 506, 508, 529-531, 533
Report of engagement between U. S. S. Morse and Confederate battery near Fort Lowry, Va 530
Indiana Troops. Mentioned. Infantry—Regiments: 30th, 51st, 397.
Industry, Schooner.
Capture of 637
Mentioned 729
Ingalls, Rufus.
Correspondence with Montgomery C. Meigs 163
Mentioned 163, 198, 203
Ingraham, Duncan N. Correspondence with William C. Whittle 812
Ingram, W. C. Mentioned 364
Inquirer and Chronicle. Correspondence with J. Wills 458
Iowa, Sloop. Convoy of, by U. S. S. Flag 686
Iris, Schooner.
Capture of 673
Mentioned 675, 680
Ironsides, U. S. S. See *New Ironsides, U. S. S.*
Iroquois, U. S. S.
Mentioned 682, 683, 754
Ordered to duty in Atlantic Blockading Squadron 773
Irwin, John. Mentioned 281

Isaac N. Seymour, U. S. S. Page.
Mentioned 531
Relieved from duty in Potomac Flotilla 567, 574
Isabel, Steamer. Mentioned 635
Isherwood, B. F. Report of repair of U. S. S. Dawn 723
Island Belle, Steamer.
Mentioned 27, 28, 45, 609-611
Operations, etc., in Rappahannock River 33-36
Reconnoissance in East River, Virginia 47
Ives, Thomas Poynton.
Appointed fleet captain of Potomac Flotilla 279
Correspondence with
Harwood, Andrew A 355
Morris, William G. 285
Todd, George B 194
Mentioned. 118, 130, 132, 177, 193, 204, 280, 281, 284, 287, 288, 317, 324, 335, 348, 356
Reports of.
Frances Elmor, Schooner. Burning of 118
Lomax, Dr., and Pye, Mr. Arrest of 87
Rappahannock River. Affairs on 351
Richard Vaux, Sloop-yacht. Seizure of, and destruction of buildings at Aquia Creek, Virginia 289
Satellite and Reliance, U. S. steamers. Capture of, August 23, 1863 .. 333
J. B. Spafford, Schooner. Capture of, by John C. Braine, March 31, 1865 540
J. C. Bickman, Brig. Mentioned 408
J. C. Davis, Barge. Loss and destruction of 215-217
J. C. Warner, Schooner. See *S. J. Waring, Schooner.*
J. H. Etheridge, Schooner.
Capture of 637
Mentioned 729
J. Jerome, Steamer. Mentioned 688
Jabber, Columbus. Mentioned 98
Jackson, ——. Mentioned 474
Jackson, A. Mentioned 219
Jackson, Fort. See *Fort Jackson, U. S. S.*
Jackson, Hallie. See *Hallie Jackson, Brig.*
Jackson, James H. Mentioned 518
Jackson, James L.
Mentioned 139
Statement of burning of ship Alleghanian 140
Jackson, John L. Mentioned 424
Jackson, Joseph H. Mentioned 281, 302
Jackson, Thomas J.
Correspondence with Daniel H. Hill 186
Mentioned 136, 258
Jackson, William. Mentioned 222
Jacob Bell, U. S. S.
Abstract log, March 8, 1863, to May 13, 1865 600-603
Assistance rendered U. S. transport steamer George Peabody 305, 306
Boat expedition from, to St. George's Island 375
Captures made by 126, 234, 298, 304, 322, 396, 555
Destruction of salt works in Shelton's Creek, Virginia 454, 455
Engagements with Confederate batteries at
Brandywine Hill, Va., December 10, 1862 ..... 193, 195
Port Royal, Va., December 4, 1862 ..... 183, 185, 191
Freestone Point, Va 3

Jacob Bell, U. S. S.—Continued. Page.
Expeditions to
Dividing Creek, Virginia 455
Nomini Creek, Virginia 148
Mentioned 8, 9, 12, 14, 47, 85, 93, 96, 100, 112, 114, 124, 127, 128, 132, 133, 151, 156, 158, 167, 171, 172, 182, 184, 196–198, 200, 201, 203, 204, 206, 214, 217, 218, 248, 257, 260, 267, 273, 281, 284, 292, 301, 303, 319, 323, 347, 362, 366, 367, 374, 380, 383, 388, 393, 395, 397, 402, 405–408, 413, 417, 424, 427–431, 439, 440, 441, 444, 445, 447–449, 452, 456, 466, 468, 471, 491, 496, 502, 506, 508, 531, 543–545, 583, 587, 588, 591, 592, 609–611
Operations, etc., in
Consequence of capture of steamers Satellite and Reliance 328, 329
Potomac River 77, 89–92, 103
Rappahannock River 33–36, 436
Orders for movements 75, 189, 389, 390, 426, 474
Passage of Confederate batteries on Potomac River by 22
Relieved from duty in Potomac Flotilla 567, 574
Street, William T., appointed to the temporary command of 102, 181
James, Mr. Mentioned 612
James Landry, Sloop. Capture of 490, 491
James McGee, Schooner. Assistance rendered to, by U. S. S. Commodore Read 569
James Murray, Tug. Discharge of, from service 14
James River. Defenses of. See *Virginia. Preparations for defense of.*
James River Flotilla. Charles Wilkes relieved of command of 72
Jamestown, Steamer. Mentioned 294, 797, 809
Jamestown, U. S. ship.
Cruise from June 19 to July 3, 1861 763
Mentioned 707, 753
Movements of 721
Orders for movements 681, 725
Preparation of, for sea 722
Jefferson Davis, C. S. privateer. Depredations committed by 787, 793
Jeffers,* Captain. Mentioned 36
Jenkins, Richard W. Mentioned 83
Jenkins, Thornton A. Mentioned 77
Jennings, George H. Mentioned 133
Jerome, J. See *J. Jerome, Steamer.*
John Barrow, British vessel. Mentioned 779
John Goodwin, Ship. Mentioned 787
John Hamilton, Schooner. Seizure of 763
John L. Lockwood, U. S. S. Mentioned 576, 577
John Parkinson, British ship. Mentioned 783
John U. Dennis, Schooner. Mentioned 509
John Warner, Steamer. Correspondence between captain of, and S. Lockwood Brown 298
John Welsh, Brig. Capture of 787, 793
Johnson, Charles (Colored). Mentioned 83
Johnson, Charles (Seaman). Mentioned 698
Johnson, Charles H. Statement of movements of Confederate troops 30
Johnson, D. S. Mentioned 222
Johnson, Edward, Mentioned 425
Johnson, F. U. See *F. U. Johnson, Schooner.*
Johnson, F. W. See *F. W. Johnson, Schooner.*

* Captain Jos. R. Jeffries, Ninth Virginia Cavalry, was in that section of country at this time.

Page.
Johnson, Frederick. Mentioned 5
Johnson, Hannah M. See *Hannah M. Johnson, Schooner.*
Johnson, Henry.
Mentioned 278, 280
Report of casualties resulting from engagement at Brandywine Hill, Va.. 192
Johnson, Isaac. Mentioned 178, 333, 340, 341
Johnson, Isaiah. Mentioned 222
Johnson, James. Mentioned 309
Johnson, James G. Correspondence with captain of schooner E. Waterman. 246
Johnson, James S. Mentioned 531
Johnson, John (Engineer). Mentioned 78
Johnson, John. Mentioned 757
Johnson, Samuel. Mentioned 222
Johnson & Higgins.
Correspondence with War Department, U. S. 663
Mentioned 672
Jones, A. B. Mentioned 158, 167
Jones, C. M. Mentioned 577
Jones, Catesby ap R. Mentioned 803, 804
Jones, Commodore. See *Commodore Jones, U. S. S.*
Jones, Edward. Mentioned 217
Jones, Hugh.
Mentioned 303, 304
Report of arrest of blockade runners 306, 312
Jones, J. A. Mentioned 602
Jones, J. Paul. Mentioned 239
Jones, J. Pembroke.
Appointed to command Pig Point battery 800
Mentioned 805
Jones, John H. Mentioned 98
Jones, L. Mentioned 161
Jones Point, Va.
Confederate arms at. Report of Edward Hooker 517
Dispersion of Confederate force on. Report of Foxhall A. Parker 521
Jones, S. S. See *S. S. Jones, Schooner.*
Jones, Sydney. See *Sydney Jones, Schooner.*
Jones, Thomas R. Mentioned 240, 241
Jones, Warner T. Correspondence with French Forrest 141
Jones, William. Mentioned 280, 284
Jones, Neilson & Whitlock. Mentioned 663
Jordan, Marshall P.
Correspondence with G. J. Pendergrast 748
Refusal of, to take oath of allegiance to the United States 748
Jordan, Stephen. Mentioned 491
Joseph, Brig. Mentioned 692, 693
Josselyn, Francis.
Mentioned 62, 63, 65, 77, 80
Report of depredations committed by U. S. transports 70
Jotank Creek, Maryland. Expedition to. Report of Foxhall A. Parker ... 520
Joyce, B., Miss. Mentioned 685
Juana Teresa, Spanish brig. Mentioned 779
Juniata, U. S. S. Mentioned 471
Juniper, U. S. S.
Abstract log, July 11, 1864, to May 26, 1865 603
Attached to Potomac Flotilla 468

Juniper, U. S. S.—Continued. Page.
Mentioned 502, 506, 508, 531
Relieved from duty in Potomac Flotilla 567, 574
Kadosh, Schooner.
Killing of master of 191, 193–195
Mentioned 207
Kaiser, Rudolph. Mentioned 375
Kane, Chris. Mentioned 698
Kane, John. Mentioned 138
Kate, Sutler's schooner. Seizure of 237
Kater, T. F. Mentioned 219
Kautz, Albert.
Correspondence with Lewis C. Sartori 731
Report of recapture of prize brig Hannah Balch by C. S. privateer Coffee .. 744
Keenan, Peter. Mentioned 183, 587
Keenon, Edwin. Mentioned 145
Keller, George W. Mentioned 486
Kellogg, John. Mentioned 79
Kelly J. R. Correspondence with G. J. Pendergrast 677
Kelly, Mack. Mentioned 41
Kendall, Robert. Mentioned 312
Kennon, Beverly.
Information concerning buried torpedoes given by 576
Mentioned 493
Kent, James. Mentioned 354
Kerkeslegen, William. Mentioned 216
Keyport, U. S. transport steamer.
Convoy of, by U. S. S. Fuchsia 434
Mentioned 128, 129, 294, 305, 312, 431
Keys, James W. Mentioned 33
Keys, Selden. Mentioned 376
Keystone State, U. S. S.
Mentioned 576, 577, 660, 706
Movements of 634, 639, 684
Kidder, Frederic, & Co. Mentioned 643
Killam, Thomas. See *Thomas Killam, British vessel.*
Kilpatrick, Judson.
Mentioned 281, 282, 284, 420, 456
Report of attempt to destroy U. S. steamers Satellite and Reliance 327, 328
Transportation of command of, across Rappahannock River 281
Kilty, A. H.
Correspondence with Navy Department, U. S. 495, 498
Report of measures for protection of U. S. S. Roanoke against attack by torpedoes 500, 501
Kimball, R. J. For correspondence, see *Toronto, U. S. consul at.*
King, Mr. Mentioned 251
King, John H. Mentioned 350
King, William. Mentioned 482
King Philip, U. S. S. Mentioned 214, 215, 217–219, 226, 230, 248, 310, 357, 377, 419–421, 431, 433
Kingfisher, Tug. Mentioned 487
Kingston, Steamer. Burning of 469
Kintzing, M. R. Mentioned 766
Kirk, Andrew. Mentioned 569
Kirkendall, Charles H. Mentioned 313
Kirwin, Solomon F. Mentioned 239

Pages.
Klingender, M. G., & Co. Mentioned 752
Knapp, Joseph D. Mentioned 660
Knapp, Sarah. Mentioned 685
Knickerbocker, Steamer. Destruction of 508-510
Knight, Henry. Mentioned 351
Knowles, Robert. See *Robert Knowles, Schooner.*
Knox, General. See *General Knox, Schooner.*
Kune, Henry. Mentioned 239
Lacey, James. Mentioned 131, 132
Lacey, Robert. Mentioned 131, 132
Lachemeyer, O. Mentioned 67
Ladies' Delight, Schooner. Capture of 268-270
Lady Davis, C. S. S.
Capture of ship A. B. Thompson. See *A. B. Thompson, Ship. Capture of, by C. S. S. Lady Davis, May 19, 1861.*
Mentioned 635, 649-658, 735
Purchase of, by C. S. Government from State of South Carolina 657
Lady Washington, Yawl. Capture of 133
Lahey, Thomas. Mentioned 344
Lamb, W. W.
Correspondence with G. J. Pendergrast 673, 679
Mentioned 632
Lamb, William. Mentioned 648
Lambert, John. Mentioned 144
Landry, James. See *James Landry, Sloop.*
Lane, George W. Mentioned 88
Lane, Harriet. See *Harriet Lane, U. S. S.*
Lane, James. Mentioned 747, 748
Langley, W. Mentioned 219
Lanman, Joseph. Mentioned 503, 504
Latchem, J. W. Mentioned 674
Laughlin, Mary. Mentioned 685
Laurie, Agnes. Mentioned 685
Lawrence, Center H. Mentioned 375
Lawrence, William. Mentioned 5, 219
Lawson, Major. Mentioned 403
Layton, Robert. Mentioned 43
League, John S. Statement of movement of Confederate troops 30
Leary, A. Mentioned 368
Leatch, James J. Mentioned 152
Lee, Mr. Mentioned 369, 370, 596
Lee, Daniel M. Mentioned 140
Lee, G. T. Mentioned 239
Lee, George G. Correspondence with Robert H. Wyman 41
Lee, Robert. Mentioned 536
Lee, Robert E.
Correspondence with
Carter, Robert R 808
Gwynn, Walter 646
Hollins, George N 811
Huger, Benjamin 699, 802
Navy Department, C. S 808
Navy yard, Norfolk, Va., Commandant of 801
Tucker, John R 797, 802
Virginia, Governor of 806
Mentioned 188, 235, 358, 518, 550, 562, 715, 811

Page.
Lookout, Schooner. Capture of 38
Lorigan, John. Mentioned 536
Loring, Harrison.
Correspondence with Navy Department, U. S 634
Mentioned 648
Louisiana.
Blockade of coast of. See *Blockade of Southern ports.*
List of guns sent from Norfolk navy yard to 806
Order raising blockade 568
Louisiana Troops. Mentioned. Infantry—Regiment: 10th, 293.
Lourie, J. Report of damage done to U. S. S. Morse in engagement with battery near Fort Lowry, Va 531
Low, Andrew. Mentioned 735
Low, Isaac, & Co. Mentioned 735
Lower Shipping Point, Va.
Confederate battery at. Report of R. H. Wyman 7
Destruction of magazines at. Report of A. A. Harwood 105
Lower Sandy Point, Va. See *Potomac River. Passage of Confederate batteries on, by vessels of Potomac Flotilla.*
Lowndes, Lloyd. Mentioned 67
Lowry, Reigart B.
Correspondence with Navy Department, U. S 688, 689
Mentioned 785, 786
Loyd, James. Mentioned 742
Lucas, Fincade. Mentioned 146
Lucas, J. Mentioned 660
Lucas, Phil. Mentioned 135
Lucas, William. Mentioned 135
Lynch, John. Mentioned 368
Lynch, Peter. Mentioned 742
Lynch, William F. Mentioned 803, 805
Lynchburg, Schooner. Capture of 683
Lyon, Catharine. Mentioned 685
McAllan, Captain. Mentioned 584
McBlair, Fanny. Mentioned 241
McBlair, William.
Correspondence with navy yard, Norfolk, Va., Commandant of 800
Mentioned 805
McCabe, John. Statement of capture of schooners Coquette and Two Brothers. 344
McCarty, Charles. Mentioned 289
McCaulley, James. Mentioned 333, 337, 338
McClellan, G. B. See *G. B. McClellan, Steamer.*
McClellan, George B.
Correspondence with
Harwood, A. A 109
Navy Department, U. S 28
Mentioned 110
McClure, William S. Mentioned 14
McCluskey, John. Mentioned 191, 192
McConnell, George E.
Mentioned 90, 151, 521
Reports of.
Bibb, U. S. S. Movements of, in consequence of Confederate raid into Maryland under General Early 466
Nomini Creek, Virginia. Expedition to 148

Linnekin, Thomas J. Page.
Correspondence with
Arthur, William A 353
Harwood, A. A 201, 212
Magaw, S 192, 196, 204
Street, William T 277, 280, 462
Mentioned 205, 208, 210, 211, 220–222, 254, 268, 270, 273–275, 280, 309, 318, 320, 323, 325, 351, 352, 358, 588
Reports of.
Brandywine Hill, Va. Engagements at, December 10 and 11, 1862 .. 192, 195
Milford Haven Creek. Burning of schooner in, and grounding of U. S. revenue steamer Hercules 353
Potomac Flotilla.
Captures made by 211, 215, 223, 253, 269, 275, 321
Precautionary measures against attack upon vessels of 325
Salt works. Destruction of 210
Satellite and Reliance, U. S. steamers. Capture of, August 23, 1863 .. 324
Tappahannock, Va. Expedition to 278
Little Ada, U. S. S.
Attached to Potomac Flotilla 527, 537
Captures made by 549
Commanding officer of. Correspondence with E. Hooker 566
Mentioned 567, 574
Orders for movements 566
Littlepage, William T. Mentioned 158, 167, 218, 219
Liverpool, U. S. Consul at. Correspondence with State Department, U. S. 776, 783
Livingston, George B. Mentioned 560
Livingston, John W.
Correspondence with Navy Department, U. S 734
Mentioned 790
Reports of.
Orders. Receipt of 743
Penguin, U. S. S. Cruise of, from July 8 to 11, 1861 784
Penguin, U. S. S. Cruise of, to York River, and information regarding steamer Wilson G. Small 767
Lizzie Baker, U. S. transport steamer.
Convoy of, by U. S. S. Fuchsia 434
Mentioned 431
Lloyd, John. Mentioned 456, 457
Locke, Milo W. Mentioned 73
Lockwood, Henry H. Mentioned 120, 121, 147
Lockwood, John L. See *John L. Lockwood, U. S. S.*
Lockwood, Samuel.
Correspondence with
Navy Department, U. S 687
Stringham, S. H 763
Mentioned 707, 716, 755
Report of departure of U. S. S. Daylight from New York navy yard 709
Locust, John. Mentioned 81
Logan, Confederate steamer. Mentioned 809
Lomax, Dr. Mentioned 87
Lomax, Samuel. Mentioned 333
London, U. S. Consul at. Correspondence with State Department, U. S 778
Long Branch, Steamer. Mentioned 410
Longstreet, James. Mentioned 34

Page.
McGruder, Zachariah S. Correspondence with S. Magaw 200
Machodoc Creek, Virginia. Combined Army and Navy expedition to.
Reports of
Eastman, Thomas H 410
Parker, Foxhall A 410
McHugh, Mary. Mentioned 685
McIntosh, Charles F. Mentioned 805
Mack, Thomas. Mentioned 381
McKarnan, Charles. Mentioned 289
McKean, William W.
Mentioned 39, 626, 669, 692
Report of capture of ship General Parkhill 629
McKenney, B. B.
Correspondence with R. H. Wyman 40
Mentioned 41
McKenzie, Lewis. Correspondence with Navy Department, U. S. 73, 82
Mackinaw, U. S. S. Mentioned 464
McKnew, M. E. Mentioned 283
McLane, William. Mentioned 80
McLaughlin, Augustus. Mentioned 241
McLean, Louis A. Mentioned 158, 167
McLellan, Charles H. Mentioned 333
McMillan, Thomas. Mentioned 272
McNeil, George H. Mentioned 482
McPhail, J. L.
Correspondence with
Harwood, Andrew A 365
Parker, Foxhall A 391
Rogers, Henry J 156
Mentioned 557
Macy, Henry G. Mentioned 502, 506, 508, 529, 531
Maddox, ———. Mentioned 410
Maddox, William. Mentioned 29
Magar, Benjamin S. Mentioned 356
Magaw, Samuel.
Appointed to command Second Division, Potomac Flotilla 100
Correspondence with
Babcock, William L 283
Brown, Charles H 143
Brice, John J 45
Butterfield, Daniel 235, 259, 282
C. S. authorities at Port Royal, Va 200
Harwood, Andrew A 59, 61, 63, 69, 74, 113, 119, 129, 154, 162, 177, 180, 207, 213, 237, 248, 252, 256, 260–263, 265, 271, 272, 280, 286, 292, 295, 302, 315
Hill, George E 265
Hooker, Joseph 236
Ives, Thomas P 118
Josselyn, Francis 70
Linnekin, T. J 192, 196, 204, 278, 321, 325
McGruder, Zachariah S 200
Navy Department, U. S 56, 265, 268
Plunkett, James L 55
Provost, Nelson 67, 73, 78, 185, 193, 258
Schulze, G. C 30
Shankland, William F 18

McConnell, George E.—Continued. Page.
Reports of.
Raley, James. Visit to the house of 167
Satellite and Reliance, U. S. steamers. Capture of, August 23, 1863 .. 333
McCook, Roderick Sheldon.
Mentioned 631, 637, 692, 714, 771
Report of arrival of C. S. privateer schooner Savannah at New York 693
McCormick, Christopher. Mentioned 333, 340, 341
McCormick, James. Mentioned 309
McCrea, E. P.
Correspondence with
Babcock, William L 139
Brown, Charles H 147
Dean, Benjamin C 160
Harwood, Andrew A 89, 129, 175, 202, 255
Linnekin, T. J 275
Provost, Nelson 157
Robinson, John F. D 276
Savage, Hugh H 120, 134
Shankland, William F 91, 108, 181, 182
Street, William T 12, 22, 89, 90, 96, 102, 132, 181, 206, 255
Mentioned 3, 9, 10, 14, 16, 24, 85, 93, 97, 104, 116, 117, 131, 138, 148, 151, 159–161, 165, 166, 168, 169, 173–180, 196, 202, 203, 207, 212, 213, 236, 243, 255, 256, 260, 262, 587, 605
Relieved of duty as fleet captain of Potomac Flotilla 279
Reports of.
Coal, Supplies of 170–173
Gwynn's Island and Nomini Creek, Virginia. Expedition to 146
Mathias Point, Va. Destruction of works at 91
Pilot, Schooner. Release of 92
Potomac Flotilla.
Affairs of 112, 124, 128, 214, 217, 218, 267
Captures made by 103, 114, 156, 158, 234, 267, 273
Disposition of vessels of Second Division 248, 257
Rappahannock River, Virginia.
Expedition up the 33–36
Cooperation with the Army on 171
McDaniel, Charles A. Report of movements of party of marines from C. S. ram Virginia 537
McDaniel, H. C. Correspondence with commandant of Navy yard, Norfolk. 811
MacDiarmid, John. Mentioned 730
McDonald, Captain. Mentioned 511
McDonald, Bedan B. Mentioned 397
McDonald, James. Mentioned 219, 225
McDonald, James G. Mentioned 138
McDonald, Michael. Mentioned 138
McDonald, Sarah. Mentioned 685
McDowell, Irvin. Mentioned 47
Macedonian, U. S. sloop. Mentioned 636, 696, 702
McGee, E. Mentioned 298
McGee, James. See *James McGee, Schooner.*
McGowan, John, jr.
Mentioned 55, 70, 77, 80, 206
Reports of.
Coal, Supplies of 207
Wyandank, U. S. S. Captures made by 179

Mail, Schooner. Page.
Mentioned 237
Release of 55, 233
Seizure of 55, 232, 234
Maine Troops. Mentioned. Infantry—Regiments: 1st, 6th, 19th, 233.
Malacca, Steamer. Mentioned 752
Mallory, Stephen R. For correspondence, see *Navy Department, C. S.*
Maloney, Bridget. Mentioned 685
Malvern, U. S. S. Mentioned 465
Mangham, George. See *George Mangham, U. S. schooner.*
Mangan, Henry L. Mentioned 333, 337, 339
Mara, Caroline. Mentioned 382
Maratanza, U. S. S. Orders for movements 72
Marchand, John B. Mentioned 640
Marchant, James. Mentioned 209
Marmaduke, Milton. Mentioned 251
Marmaduke, William. Mentioned 125, 131
Marshall, Mrs. Mentioned 7
Marshall, Addison. Mentioned 308
Marshall, Frank. Mentioned 217
Marston, Gilman. Mentioned 329, 347, 375, 382–389, 391, 395, 400, 408, 600
Marston, John.
Mentioned 631, 640, 678, 781
Request of, to participate in the retaking of Norfolk, Va 768
Martin, Charles. Mentioned 695
Martin, H. C. Mentioned 452, 453
Martin, John. Mentioned 303
Martin, Thomas. Mentioned 303
Martindale, John H. Mentioned 60, 61, 241, 248, 249, 263
Mary, Schooner.
Capture of 637
Mentioned 691, 729, 792
Mary E. Thompson, Brig. Capture of 793
Mary Elizabeth, Schooner. Order of Commodore Harwood regarding 124
Mary Goodell, Ship. Capture of 794
Mary Jane, Vessel. Mentioned 128
Mary Washington, Vessel. Mentioned 785
Mary Willis, Schooner.
Capture of 630, 637
Mentioned 14
Maryland, Governor of.
Correspondence with
Frazier, John M 56
Navy Department, U. S 56
Mentioned 56, 57
Maryland Troops (Confederate). Mentioned.
Artillery—Battery: 1st, 480.
Cavalry—Regiment: 1st, 283, 307.
Infantry—Regiment: 1st, 30, 73, 115.
Masenger, Joseph. Mentioned 167
Masher, John. Mentioned 377
Massey, Elijah E. Mentioned 285
Massachusetts, U. S. S. Mentioned 630
Massasoit, U. S. S. Mentioned 460

Magaw, Samuel—Continued. Page.
Correspondence with
Sheridan, Philip 194
Street, William T..... 185, 193, 196–198, 201, 244, 245, 249, 251, 287, 297, 304, 331
Turner, James W 193
Williams, Seth 255, 264
Mentioned 12, 17, 18, 44, 54, 57, 59, 60, 63, 66, 76, 77, 84, 85, 90, 92, 93, 105, 112, 113, 116, 119, 120, 129, 131, 146, 153, 155, 174–176, 178, 182, 195, 197, 201, 207, 214, 225, 235, 239, 247, 248, 256–260, 262, 267, 271, 280, 284, 296, 301, 314, 315, 317, 319, 324, 325, 328, 329, 335, 352, 363, 365, 373, 377, 387, 583, 591, 605
Reports of.
Arctic, Schooner. Burning of 85
Brandywine Hill, Va. Engagements at, December 10 and 11, 1862.. 191, 195
Coal, Supplies of 174
Dragon, U. S. S. Condition of 242
Hercules, U. S. revenue steamer. Permits issued by 58
Mathias Point, Va. Reconnoissance of 123
Patrick Henry, C. S. S. Information concerning 294
Piankatank River. Reconnoissance in 45
Port Royal, Va.
Engagement at, December 4, 1862 182
Erection of works near, by Confederates 196
Proposed attack upon 200
Port Royal and Fredericksburg, Va. Affairs at 176
Potomac and Rappahannock rivers. Affairs in 78
Potomac Flotilla.
Captures made by vessels of 52, 55, 59, 80, 145, 300
Disposition of vessels of 58, 66, 245, 268, 361, 362, 367, 374, 380
Operations of vessels of Second Division 168
Racer and Sophronia, U. S. mortar schooners. Movements of 206
Rappahannock River.
Affairs on 190, 198, 199, 203, 204, 255, 313, 348
Crossing of, by Judson Kilpatrick 281
Reconnoissance in, and engagement near Fort Lowry, Va..... 235, 236
Satellite and Reliance, U. S. steamers. Capture of, August 23, 1863. 322, 323
Shipping Point and Cockpit Point, Va. Destruction of batteries on.. 121
Tayloe, John. Taking of arms from house of 142
Thomas Freeborn, U. S. S. Movements of 51, 84
Virginia. Protection of citizens of 53
Wyandank, U S. S. Grounding of 189
Magaw, William P. Mentioned 45, 78
Magee, Sally. See *Sally Magee, Confederate bark.*
Magordon, Steamer. Mentioned 635
Magrath, A. G.
Correspondence with R. C. Gilchrist 650
Mentioned 650, 654
Magruder, John Bankhead.
Correspondence with George Deas 740
Mentioned 46, 812
Mahaska, U. S. S.
Captures made by 291
Mentioned 286, 287, 289, 296, 595
Orders for movements 285, 295
Mahoney, Edward. Mentioned 81
Mahopac, U. S. S. Orders for movements 571

Meigs, Montgomery C. Page.
Correspondence with
Harwood, A. A 233, 305
Ingalls, Rufus 163
Navy Department, U. S 12, 163, 262
Mentioned 156, 162, 236, 286, 401, 453
Melville, ———. Mentioned 103
Melvin, George. Mentioned 98
Memminger, Charles G. For correspondence, see *Treasury Department, C. S.*
Mercer, Samuel.
Correspondence with Navy Department, U. S 639
Mentioned 687, 714, 729, 742, 763, 791
Reports of.
Amelia, Ship. Capture of 728
Charleston, S. C. Movements of United States vessels to and from 727
Union, U. S. S. Movements of 781
Wabash, U. S. S. Movements of 684
Merchant, Clarke. Mentioned 330
Merchant Shipping Act. See *British Ownership. Transfer of American vessels to.*
Mercke, Ernest. See *Ernest Mercke, Steamer.*
Mercury, U. S. S.
Attached to Potomac Flotilla 473, 474
Captures made by 495, 522
Engagement with Confederates in Great Wicomico River, Virginia 488
Expedition to Milford Haven and Stutt's Creek, Virginia 484
Mentioned 475–477, 482, 483, 489, 496, 502, 506, 511, 520, 531, 543, 544, 549, 567, 574, 585, 599
Operations, etc., in consequence of
Burning of schooner Knickerbocker 508–510
Capture and destruction of U. S. picket boat No. 2 by Confederates. 486–488
Protection of light vessel off Smith's Point 507
Merrick & Sons. Mentioned 793
Merrill, J. Amos. Mentioned 403
Merrimack,* C. S. S.
Mentioned 115, 117, 119, 125, 130, 145, 747, 748
Preparations to resist attack by 24, 29
Raising and docking of 801, 804, 806, 808
Merriman, John. Mentioned 703
Mervine, William. Mentioned 623, 752
Metzler, J. Mentioned 239
Miffleton, Margaret. Mentioned 146
Mignonette, Sutler's schooner. Seizure of 273
Milburn, Wesley. Mentioned 211
Miles, Mr. Mentioned 656, 658
Miles, Samuel G. Mentioned 392
Milford Haven Creek, Virginia.
Burning of schooner in.
Communications from A. A. Harwood 358
Reports of
Arthur, William A 353
Harwood, A. A 352
Linnekin, T. J 353

*Called officially by the Confederates C. S. S. Virginia.

Page.
Masten, David. Mentioned 297
Masten, Thomas G. Mentioned 297
Mather, Henry W. Mentioned 596
Mather, S. W.
Correspondence with G. J. Pendergrast 681
Mentioned 631, 683, 742
Mathews County, Va. Proposed raising of United States flag in. Report of Edward Hooker 561
Mathews, S. H. Mentioned 790
Mathias Point, Va.
Attack upon U. S. transport George Peabody at. Reports of
Harwood, A. A 305, 306
Schulze, G. C 305
Capture of Confederates near. Report of James C. Tole 489
Clearing timber from.
Orders and instructions.
Harwood, A. A 92
Navy Department, U. S 100
Report of William T. Street 89
Confederate signal station on. Report of A. A. Harwood 360
Destruction of works at. Report of E. P. McCrea 91
Reconnoissance of.
Orders and instructions, Navy Department, U. S 350, 351
Reports of
Harwood, A. A 350, 352, 354
Magaw, Samuel 123
Matingly, Mr. Mentioned 5
Matthew Vassar, U. S. Schooner.
Captures made by 135
Mentioned 99, 121, 128, 136, 142, 393, 407, 408, 426, 432, 437, 441
Operations, etc., in
Potomac River 134
Rappahannock River 120
Mattox Creek, Virginia.
Expedition to. Report of William T. Street 304
Operations in, March 16–18, 1865. Reports of
Eastman, Thomas H 535, 536
Parker, Foxhall A 534, 536
Maury, John S. Mentioned 798
Maury, Matthew F. Mentioned 25
Maury, William L.
Appointed to command Sewell's Point battery 801
Mentioned 805
Maxwell, John. Mentioned 422–424
May, G. Mentioned 239
Mayo, W. R. Correspondence with commandant of Norfolk navy yard 800
Meade, George G.
Mentioned 298, 329, 404, 405
Report of attempt to destroy U. S. steamers Satellite and Reliance 327, 328
Mealy, Robert. Mentioned 5
Mears, Sally. See *Sally Mears, Confederate schooner.*
Mechanic, Schooner. Mentioned 297
Mee, John. Mentioned 333, 340, 341

Page.
Montague, C. W. Mentioned 740
Monterey, Schooner. Capture of 38
Montgomery, Ictho. Mentioned 365
Montgomery, Ijams. Mentioned 365
Montgomery, John B. Mentioned 461, 567, 573, 574
For correspondence, see *Navy Yard, Washington, Commandant of.*
Montgomery, Judson. Mentioned 365
Monticello, U. S. S.
Affair on the Rappahannock River June 24, 1861 738–741
Arrival of, at Washington navy yard with schooners Iris and Catherine and transport Stars and Stripes 680
Change of orders for movements 672, 676
Condition of 676, 695, 711, 788–790
Cooperation with Army on James River 768
Engagement with Confederate battery at Sewell's Point, Va., May 18 and 19, 1861 644–648
Mentioned . 630, 631, 635, 660, 662, 664, 665, 669, 674, 677, 716, 744, 747, 748, 750, 753, 756
Movements of 719
Name of. Communication from Flag Officer Stringham concerning 670
Orders for movements 671, 675, 713, 737, 743, 754
Moody, Mr. Mentioned 427
Moore, Mr. Mentioned 5
Moore, Pilot. Mentioned 345
Moore, Charles P. Mentioned 132
Moore, Francis. Mentioned 295
Moorman, M. N. Mentioned 187
Morgan, H. C. Mentioned 652, 653
Morgan, Van R. Mentioned 755
Morrill, Lot M. Mentioned 644
Morris, ——. Mentioned 134
Morris, Commodore. See *Commodore Morris, U. S. S.*
Morris, Fannie Ann. Mentioned 673
Morris, George U.
Correspondence with G. J. Pendergrast 694
Mentioned 72
Report of arrival of U. S. S. Port Royal at Aquia Creek, Virginia 71
Morris, Henry W.
Correspondence with Navy Department, U. S 11, 15
Report of passage of batteries on Potomac River by U. S. S. Pensacola 16–18
Morris, Isabella. Mentioned 673
Morris, John. Mentioned 673
Morris, William G.
Correspondence with A. A. Harwood 296, 348
Mentioned 273, 284, 495, 496, 502, 506, 508, 531, 581
Reports of.
Gunpowder River bridge, Maryland. Arrival of U. S. S. Cœur de Lion at 294
Odd Fellow and Sarah Margaret, Schooners. Burning of 285
Potomac Flotilla. Captures made by 279, 321
Morse, Mrs. Mentioned 363
Morse, U. S. S.
Abstract log, December 21, 1864, to June 10, 1865 604
Attached to Potomac Flotilla 494, 496
Cooperation with Army in expedition up Rappahannock River 527–531

Milford Haven Creek, Virginia—Continued. Page.
Expedition to, September 24, 1864. Reports of
Parker, Foxhall A 484
Street, William T 484
Millbourne, ———. Mentioned 483
Mill Creek, Virginia.
Combined Army and Navy expedition to. Reports of
Hooker, Edward 422
Parker, Foxhall A 421
Street, William T 423
Organization of expedition to. Report of Foxhall A. Parker 481
Miller, Horace B. Mentioned 252
Minge, Sarah. See *Sarah Minge, Schooner.*
Minna, U. S. transport.
Guarding Bush River bridge, Maryland 465
Orders for movements 468
Minnesota, U. S. S.
Aid afforded captain and crew of bark D. C. Pearce 632
Captures made by 630, 637, 639, 756
Condition of 617–619
Cruise from June 11 to 18, 1861 726
Mentioned 361, 459, 464, 467, 594, 620, 621, 631, 635, 638, 640, 641, 644, 648, 649, 659–662, 664, 665, 670, 671, 677, 678, 682, 686, 690, 692, 708, 714, 715, 727, 729, 730, 732, 736, 737, 739, 740, 743, 748–750, 753, 755, 758, 759, 762, 764, 765, 767, 771, 774, 775, 777, 779–781, 784, 786, 788, 790, 791, 794, 795
Movements of 625, 629, 669, 691
Orders for movements 617, 619, 667
Stringham, S. H.
Hoists his flag on board of 624
Ordered to hoist his flag on board of 617
Mintzer, F. W. Report of measures for protection of Bush River bridge, Maryland 550
Mississippi.
Blockade of coast of. See *Blockade of Southern ports.*
Order raising blockade 568
Mississippi, U. S. S. Mentioned 623, 676
Mitchell, Alexander. Mentioned 15
Mitchell, Archibald N. Mentioned 769, 774, 784, 788
Mitchell, George B. Correspondence with William T. Street 443
Mitchell, Hugh. Mentioned 131, 132
Mitchell, John. Mentioned 131, 132
Mitchell, John G. Mentioned 637
Mitchell, Judson. Correspondence with A. A. Harwood 233
Mobjack Bay. Reconnoissance in. Reports of
Badger, O. C 44
Wyman, R. H 44
Moccasin, U. S. S.
Attached to Potomac Flotilla 527
Mentioned 567, 574, 577
Mockabee, James C.
Correspondence with William T. Street 462
Mentioned 598
Monitor, Sloop. Capture of 49
Monitor, U. S. S. Mentioned 24
Monroe's Creek, Virginia. Expedition to. Report of William T. Street 251

Navy Department, C. S. Correspondence with — Page.
Lee, Robert E 808
Lewis, Henry H 579
Tucker, John R 812
War Department, C. S 578
Wood, John Taylor 344
Navy Department, U. S. Correspondence with
Braine, Daniel L 695, 711, 713
Bryan, Joseph 26
Burnside, Ambrose E 68, 70, 72, 73, 76, 164, 165
Chandler, William 736, 765
Chauncey, John S 743, 764, 772
Coffin, Edwin 540
Coggeshall, T. & J 787
Cropley, Samuel 10
De Krafft, J. C. P 318
Downes, John 463
Drake, F. A 703
Eagle, Henry 680
Eastman, Thomas H 417, 426, 434, 435, 452, 458–460, 556, 557
Eckert, Thomas T 399
Faunce, John 627
Foster, Amos P 70
Gansevoort, Guert 325, 472
Garfield, Walter H 497
Goldsborough, John R 729
Goldsborough, Louis M 334
Green, Charles 681
Grimshaw, A. H 746
Halleck, Henry W 162
Hamilton, Alexander 71
Hampton Roads, Senior naval officer 556, 680, 721
Hardie, James A 425
Harris, J. B 21
Harwood, Andrew A 5, 6, 16, 20, 22–24, 26, 37, 53–57, 59, 60, 62, 64, 66, 76, 77, 81–87, 93–95, 97, 99, 101–105, 107, 109, 112, 114, 116–123, 125, 127, 131, 133–136, 138, 140, 142, 143, 145, 149–151, 153, 155–157, 159, 160, 162, 164–167, 169, 173, 174, 178, 190, 194, 196, 197, 199, 202, 205, 208, 209, 212, 214, 216, 218, 220, 221, 224–226, 228, 230–232, 237, 238, 240, 241, 243, 246, 247, 250, 253, 254, 256–259, 261–263, 265, 268, 271, 273, 274, 283, 285–288, 290–296, 298, 299, 302, 303, 305–308, 310, 311, 313–317, 319, 320, 322, 324–328, 331–333, 346–352, 354–356, 360–362, 365–368, 371–373, 375–381
Haupt, Herman 226
Hays, Peter 91
Hooker, Edward 428, 434
Hull, Joseph B 734
Kautz, Albert 744
Kilty, Augustus H 495, 498, 500, 501
Lee, Samuel P 262, 659, 685
Lelan, Marietta E 43
Livingston, John W 734, 743
Lockwood, Samuel 687, 709
Loring, Harrison 634
Lowry, Reigart B 688, 689
McCabe, John 344

Morse, U. S. S.—Continued. Page.
Mentioned 464, 502, 506, 508, 511, 512, 526, 532, 533, 538, 549, 562, 586
Movements of 537
Relieved from duty in Potomac Flotilla 567, 574
Morse, F. H. For correspondence, see *London, U. S. consul at.*
Mortar Boat No. 12. See *Dan Smith, Mortar schooner.*
Mosby, John S. Mentioned 440, 505, 521, 550
Mosswood, U. S. Army gunboat.
Cooperation with Navy in expedition up Rappahannock River 527–531
Mentioned 526, 538, 586, 604
Mount Vernon, U. S. S.
Mentioned 635, 662, 664, 748, 750, 753, 755, 767, 768, 785, 787
Movements of 734
Mount Washington, U. S. S. Mentioned 377
Mowe, Samuel. Mentioned 146
Mudd, Dr. Mentioned 556
Mudd, Albert. Mentioned 67
Mudd, George. Mentioned 67
Mullen, P. Mentioned 535
Munford, George W. For correspondence, see *Virginia, Governor of.*
Munro, P. G. Mentioned 643
Murdock, Lieutenant. Mentioned 540
Murdock, Robert. Mentioned 344
Murphy, Dennis. Mentioned 456, 457
Murray, Pilot. Mentioned 655
Murray, Emily. See *Emily Murray, Schooner.*
Murray, James. See *James Murray, Tug.*
Murray, Philip P. Mentioned 652
Murray, William. Mentioned 331
Mustard, George. Mentioned 651
Music, Sloop. Capture of 349
Myer, Joseph. Mentioned 144
Myers, Myer. Mentioned 774
Mygatt, Jared P. K. Mentioned 755, 767
Mystic, U. S. S.
Captures made by 540
Mentioned 531, 556
Relieved from duty in Potomac Flotilla 567, 574
Nagle, Patrick. Mentioned 344
Nanjemoy, Schooner.
Capture of 299–302
Mentioned 304
Nansemond, U. S. S.
Attached to Potomac Flotilla 527
Commanding officer of. Correspondence with E. Hooker 566
Mentioned 543, 549, 556, 557, 567, 573
Orders for movements 566
Nash, Peter. Mentioned 45
Nash, Thomas. Mentioned 648
Nashville, Steamer. Mentioned 635
Naval Station, Baltimore, Commandant of. Correspondence with Navy Department, U. S 286, 478, 494, 542
Naval Station, Norfolk, Va., Commandant of. Correspondence with
Hooker, E 513
Navy Department, U. S 526, 537

Navy Department, U. S.—Continued. Correspondence with Page.
Trenchard, Stephen D. 634, 684
Turner, James W 51
Walters, Henry 342
War Department, U. S 47, 48, 347, 385
Wells, Clark H 540
Whiting, William D 76
Wilkes, Charles 68, 72, 74, 75, 77, 81, 82
Williams, Seth 13
Wilson, Peter 766
Wright, Caleb S 11
Wyman, Robert H 3, 4, 7–16, 19–23, 25–32, 33, 37–40, 44, 46–50
Yard, Edward M 710
Navy Yard, Boston, Commandant of. Correspondence with Navy Department, U. S 460
Navy Yard, New York, Commandant of. Correspondence with
Navy Department, U. S 627, 628, 631
Parrott, Enoch G 628
Navy Yard, Norfolk, Va.
List of guns sent from, to North Carolina, Tennessee, Louisiana, and Georgia 806
Preparations of defenses. See *Virginia. Preparations for defense of.*
Navy Yard, Norfolk, Va., Commandant of. Correspondence with
Fairfax, A. B 810
Herbert, H 809
Hunter, Thomas T 798, 799, 810
Jones, J. Pembroke 800
Lee, Robert E 801
McBlair, William 800
McDaniel, H. C 811
Maury, W. L 801
Mayo, W. R 800
Page, Richard L 798, 799, 801
Parks, Marshal 802
Pegram, Robert B 800, 801
Poindexter, C. B 810
Navy Yard, Washington, D. C., Commandant of. Correspondence with
Day, Benjamin F 571
Navy Department, U. S 37, 461, 473, 478, 498, 554, 556, 571, 645
Parker, Foxhall A 461, 469, 474
See also *Harwood, A. A.*
Neal, Isaac N. Mentioned 127
Needham, George F. Mentioned 56, 57
Needham & Sons. Mentioned 56
Nellie Baker, Steamer. Mentioned 174
Nellie Pentz, U. S. transport steamer. Assistance rendered to, by U. S. S. Don 485
Nelson, Ellen. Mentioned 685
Nelson, Thomas (Refugee).
Correspondence with President, U. S 627
Mentioned 660
Nelson, Thomas.
Mentioned 221, 223, 224, 269, 270, 280, 402, 412, 444, 482, 486, 496, 502, 506, 509, 520, 531, 587–590, 592, 593

Navy Department, U. S.—Continued. Correspondence with Page.
McClellan, George B 28
McCook, R. Sheldon 693
McCrea, Edward P 33
McKean, William W 629
McKenzie, Lewis 73, 82
Magaw, Samuel 51–53, 55, 56, 58, 59, 265, 268
Marston, John 768
Maryland, Governor of 56
Meigs, Montgomery C 12, 163, 262
Mercer, Samuel 639, 684
Montgomery, John B 409
Morris, George U 71
Morris, Henry W 11, 15–18
Naval station, Baltimore, Commandant of 286, 478, 494, 542
Naval station, Norfolk, Va., Commandant of 526, 537
Navy yard, Boston, Commandant of 460
Navy yard, New York, Commandant of 627, 628, 631
Navy yard, Washington, D. C., Commandant of .. 461, 473, 478, 498, 554, 556, 571, 645
Nicholson, William C 736
Ord, Edward O. C 539
Palmer, James S 773
Parker, Foxhall A 18, 24, 379, 381, 384, 386, 388, 391, 392, 394, 396, 397, 399–401, 404, 405, 407–411, 413, 414, 416–421, 425, 427–429, 431, 433–442, 449–452, 454, 458–465, 468–473, 478, 479, 481, 482, 484–486, 490, 492, 493, 495–499, 501–503, 505, 506, 508, 510, 512, 513, 515, 518–524, 530, 531, 534, 536, 537, 539, 540, 542, 544, 546–552, 554, 555, 557–560, 562, 563, 565, 567, 568, 570, 572–574, 576, 577
Pendergrast, G. J 633, 636, 640, 659, 669, 675, 676, 678, 680, 681, 683, 685, 690, 691, 695–697, 701, 705–709, 711, 712, 715, 716, 718, 719, 721, 722, 725, 728, 734, 737, 741, 766
Pierson, Abraham B 51
Porter, David D 525, 527, 547
Prentiss, George A 735
Provost, Nelson 65
Purviance, H. Y 32, 718, 775, 791
Quackenbush, Stephen P 71, 72, 75
Radford, William 507
Rogers, C. R. P 793
Rucker, Daniel H 453
Sartori, Lewis C 666, 686
Shankland, William F 71
Shinn, Stephen 86
Smith, William H 425
Sommers, Rudolph 332
State Department, U. S 663, 752, 776, 778
Street, William T 505
Stringham, Silas H 617–619, 621–627, 629–635, 637–639, 641, 642, 644, 648, 649, 659, 660–662, 664, 666, 667, 669, 677, 682, 686, 691, 701, 702, 704, 707, 714, 715, 719, 726, 727, 729, 730, 732, 735, 739, 740, 742, 743, 745, 746, 748–751, 753–759, 761, 762, 764–767, 769, 770, 773–775, 777–784, 786–788, 790, 791, 793
Studley, Ira B 36
Stuyvesant, Moses S 467
Taylor, James 554
Thompson, Peter, et al 6
Treasury Department, U. S 704, 759

North Carolina, Ship. Page.
Capture of 637
Mentioned 729, 769
North Carolina Troops. Mentioned. Infantry—Regiments: 2d, 3d, 26.
Northampton, Confederate steamer. Mentioned 809
Northern Neck of Virginia. See *Virginia, Northern Neck of.*
Northup, William R. Mentioned 340, 341
Norton, Charles, Mrs. Mentioned 297
Norton, Richard. Mentioned 382
Nott, Sarah. Mentioned 685
Numsen, J. Mentioned 239
Numsen, Carroll, & Co. Mentioned 233
Oaks, Ann. Mentioned 685
O'Brien, Martin. Statement of loss of barges J. C. Davis and Liberty 216
Occoquan Creek, Virginia. Engagement between U. S. S. Stepping Stones and Confederates on. Report of commandant Washington navy yard 5
O'Connor, Margaret. Mentioned 685
Odd Fellow, Schooner.
Burning of 285
Mentioned 581
Ohio Troops. Mentioned. Infantry—Regiments: 101st, 397; 138th, 476.
Old Dominion, Ship. Assistance rendered to, by U. S. S. Commodore Read .. 569
Oliver, Mr. Mentioned 137
Omensetter, Robert L. Mentioned 299
Ord, Edward O. C. Correspondence with Navy Department, U. S 539
Otis, J. Mentioned 143
Otterback, Mrs. Mentioned 30
Otterback, Philip, jr. Protection extended to. Report of R. H. Wyman 21
Owen, John. Mentioned 120, 121
Owen, Silas.
Mentioned 496, 502, 506, 508, 511, 531
Report of capture made by U. S. S. Primrose 479
Owens, Ignatius. Mentioned 104
Owens, Ned. Mentioned 5
Pacific, Tug. Mentioned 90, 92
Padgett, J. B. Mentioned 349, 350
Page, George. See *George Page, Confederate steamer.*
Page, Richard L. Correspondence with commandant of Norfolk navy yard. 798, 799, 801
Page, Thomas J. Mentioned 804, 812
Palmer, James S. Correspondence with Navy Department, U. S 773
Parke, John G. Mentioned 175, 177, 181
Parker, Foxhall A.
Appointed to command Potomac Flotilla 379
Assumes command of Potomac Flotilla 381
Correspondence with
Butler, Benjamin F 413
Dorton, Henry F 469
Draper, Alonzo G 450
Eastman, Thomas H 410, 432, 439, 503, 535, 536, 543
Eldridge, Joshua H 575
Hays, Peter 533
Hooker, Edward 382–384, 386–391, 393, 395, 396–398, 400, 402–405, 407, 411, 413–417, 420, 422, 426, 429–431, 435, 437, 439, 441, 444–447, 451, 452, 454, 455, 457, 464, 465, 467, 468, 474–477, 479, 480, 483, 486, 507, 509, 510, 512, 515–520, 522, 523, 525–527, 532, 533, 541–546, 548, 551–553, 560–564, 566, 569–573

Nelson, Thomas—Continued. Page.
Reports of.
Great Wicomico River. Engagement between U. S. S. Mercury and Confederates in 488
Guerrillas. Depredations committed by 511
Knickerbocker, Steamer. Burning of 508
Mercury, U. S. S. Confederate deserters on board of 522
Picket boat No. 2. Capture and destruction of 487
Smith's Point light. Measures for protection 507
Neptune, U. S. S. Mentioned 603
Nettleton, A. Mentioned 283
Neutral Vessels. Attitude of U. S. Government toward. See *Blockade of Southern ports.*
Nevitt, James. Mentioned 491
Nevitt, Thomas. Mentioned 491
New Ironsides, U. S. S. Mentioned 141, 504, 594
New Jersey Troops. Mentioned. Infantry—Regiment: 39th, 485.
New York, U. S. District Judge. Correspondence with G. J. Pendergrast. 683, 700
New York Troops. Mentioned.
Artillery—Regiment: 16th, 73.
Cavalry—Regiment: 8th, 185.
Infantry—Regiments: 5th (*Duryea's Zouaves*), 668; 9th (*Hawkins' Zouaves*), 67.
Newman, Joseph. Mentioned 83
New Moon, Longboat. Chase and capture of 165, 166, 169
Newton, Thomas (Master's Mate). Mentioned 45, 65
Newton, Thomas. Mentioned 648
Newton, Willoughby. Mentioned 505
Niagara, U. S. S.
Capture of ship General Parkhill 629
Mentioned 623, 625, 626, 630, 661, 669, 692, 795
Nicholson, William C. Correspondence with
Navy Department, U. S 736
Pendergrast, G. J 769
Nickerson, Sylvanus.
Mentioned 377, 394, 473, 490–492, 496, 502, 506, 508, 531
Report of seizure of schooner Champanero 538
Nino, Steamer. Mentioned 635
Noemie, Ship.
Communication from U. S. consul at St. Petersburg concerning 757
Mentioned 763
Noland, C. St. George. Mentioned 804
Nomini Creek, Virginia. Expedition to. Reports of
McConnell, G. E 148
McCrea, E. P 146
Parker, Foxhall A 386
Street, William T 148
Norfolk, Va. Request of John Marston to participate in retaking of 769
North, James H. Mentioned 735
North Atlantic Blockading Squadron.
Transfer of vessels from, to Potomac Flotilla 527, 547
Vessels ordered to duty in 464
North Carolina.
Blockade of coast of. See *Blockade of Southern ports.*
List of guns sent from Norfolk navy yard to 806
Order raising blockade 568

Parker, Foxhall A.—Continued. Page.
Reports of.
Mount Vernon, Va. Ice-bound schooners near 384
Nellie Pentz, U. S. transport steamer. Assistance rendered 485
Nomini, Va. Expedition to 386
Orders. Receipt of 388, 478
Patuxent River, Maryland. Disposition of boats seized in 577
Pensacola, U. S. S. Passage of Confederate battery at Lower Sandy Point, Va., by 18
Picket boat No. 2. Capture and destruction of 486
Point Lookout, Md. Guarding prisoners at 435
Potomac Flotilla.
Captures made by 381, 392, 396, 407, 413, 416, 421, 452, 479, 485, 490–492, 495, 510, 518, 540, 555, 560
Cooperation of, in the movements of the Army of the Potomac .. 418, 420, 421, 427–429, 431, 435, 436, 438, 440, 537
Decrease of force 567, 570, 573
Disposition of vessels 408, 496, 502, 506, 508, 515, 531, 577
Insufficiency of force 492
Movements of, in consequence of Confederate raid into Maryland under General Early 459–463, 465
Potomac River. Removal of telegraph cable across 479
President, U. S. Search for assassin of 557–559
Rappahannock River.
Detail of vessels to 404
Reconnoissance in 405
Roanoke, U. S. S. Measures for protection against attack by torpedoes. 502
Shelton Creek, Virginia. Destruction of salt works on 454
Smith's Point light-boat. Measures for protection 519
Stewart, John. Shooting of 394
Stonewall, C. S. ram. Measures to resist attack by 565
Taylor, Mr. Depredations committed on plantation of 441, 442
Thomas Freeborn, U. S. S. Condition of 420
Titan, Tug. Destruction of 401
Torpedoes. Finding of 497, 576
Virginia, Northern Neck of.
Combined Army and Navy expedition to, June 11–21, 1864 ..... 449, 450
Cooperation of the Navy with Army in expedition to 388
Wolf Trap light. Measures for protection 506
Yankee, U. S. S. Capture by Confederates of party from 493, 494
Yeocomico River. Expedition to 482
York River, Virginia. Restrictions placed upon oyster boats in 524
Parker, George. Mentioned 146
Parker, H. P. Mentioned 88, 102
Parker, Richard. Mentioned 67
Parker, William A. Mentioned 503
Parker, William H. Mentioned 803, 804
Parkhill, General. See *General Parkhill, Ship.*
Parkinson, John. See *John Parkinson, British ship.*
Parks, James. Mentioned 489
Parks, Marshal. Correspondence with commandant of Norfolk navy yard .. 802
Parrott, Enoch G.
Correspondence with
Commandant of New York navy yard 628
Stringham, Silas H 640, 641

Parker, Foxhall A.—Continued. Page.
Correspondence with
McPhail, J. L. 391
Mintzer, Frederick W 550
Navy Department, U. S 24, 391, 399, 400, 409, 417, 419, 425, 434, 451, 458, 464, 468, 470, 473, 498, 499, 501, 503, 505, 512, 513, 523, 539, 548, 554, 562, 563, 568, 572, 574
Navy yard, Washington, D. C., Commandant of 461, 469, 474
Nickerson, Sylvanus 538
Owen, Silas 479
Roane, Laurence D 494
Schulze, Gerhard C 390, 395
Shankland, William F 514
Sheridan, Philip 470
Smith, William H 400, 425
Street, William T 396, 411, 431, 437, 443, 463, 466, 471, 481, 484, 513, 575
Taylor, James 512
Tole, James C 489
Wyman, Robert H 481
Mentioned 6, 7, 141, 379, 385, 399, 409, 417, 418, 426, 434, 451, 454, 463, 473, 474, 476, 478, 494, 497, 500, 511, 525–527, 539, 540, 554, 556, 557, 565, 566, 567, 583, 593, 594, 597
Reports of.
Aquia Creek, Virginia. Cooperation of the Navy with the Army at. 454, 472
Bibb, U. S. S. Transfer of, to Coast Survey 471
Blakistone Island. Damage done to light-house on 433
Buckskin, Sloop. Burning of, and capture of army wagons 492
Carter's Creek, Virginia. Expedition to 414
Circus Point, Va. Expedition to, and engagement of U. S. S. Eureka with Confederates 411
Confederate forces. Movements of 397, 512, 550
Fleet's Point. Burning of houses on, and reconnoissance in Rappahannock River 490
Fort Lowry, Va. Engagement between Confederate battery near, and U. S. S. Morse 530
Fredericksburg, Va. Combined Army and Navy expedition to 521, 522
Gunpowder and Bush river bridges, Maryland. Measures for protection 549
Harriet De Ford, U. S. transport.
Destruction of 546
Recovery of property captured on 551, 552
Search for 542, 544
Highland Light, Steamer. Rumor of plan to capture 547
Jones Bluff. Dispersion of Confederate force on 521
Jotank and Passpatansy creeks, Maryland. Expeditions to 520
Kingston, Steamer. Burning of 469
Libby Prison. Escape of Union officers from 397
Little Ada, U. S. S. Chase of Confederates 549
Machodoc Creek, Virginia. Combined Army and Navy expedition to. 410
Mattox Creek, Virginia. Operations in 534, 536
Milford Haven and Stutt's Creek, Virginia. Expedition to 484
Mill Creek, Virginia.
Combined Army and Navy expedition to 421
Organization of expedition to 481
Morse and Periwinkle, U. S. steamers. Movements of 496

Pendergrast, Garrett J.—Continued. Page.
Correspondence with
Eagle, Henry 672, 674–676
Farrer, Solon 707
Faunce, John 694, 697, 698, 717, 733
Germain, Charles 668
Goldsborough, John R 795
Green, Charles 722, 725
Gwynn, Walter 673
Huger, Benjamin 679, 694, 705
Jordan, Marshall P 748
Kelly, J. R 677
Lamb, W. W 673, 679
Lee, Samuel P 795
Lenthall, John 668
Mather, S. W 681
Morris, George U 694
Navy Department, U. S 633, 636, 640, 678, 683, 685, 697, 705, 715, 718, 728
New York, U. S. district judge 683, 700
Nicholson, William C 769
Selfridge, Thomas O 705, 711
Stringham, Silas H 630, 631, 640
Tallmadge, Grier 701
Todd, Henry D 672, 693
Van Brunt, Gershom J 736
Washington, D. C., U. S. district judge 670, 673, 674
Wilson, Thomas W 713
Woodstock, Henry 670
Mentioned 623, 624, 632, 648, 659, 661, 680, 684, 702, 736, 744, 751, 765, 774, 777, 791
Reports of.
Condition of vessels under command of 691
Cumberland, U. S. S.
Administering oaths of allegiance to officers and crew of 659
Deficiency of officers 669, 691, 695
Dawn, U. S. S. Condition of 722
F. W. Johnson, Schooner. Capture of 707
Fresh water. Supplies of 636, 681, 716
Hampton Roads, Va. Arrival and departure of U. S. vessels from 669, 687, 690, 711, 716, 719, 721, 734, 741
Harriet Lane, U. S. S.
Condition of 716
Movements of 725
Sloop captured by 709
Monticello, U. S. S. Change of orders of 676
Prizes. Disposition of 725
Quaker City, U. S. S.
Condition of 701, 712
Movements of 725
Roanoke, U. S. S.
Cruise from Hampton Roads, Va., to Charleston, S. C., and engagement with Confederate battery at Hatteras Inlet, N. C 791
Hoisting of flag on 766
Preparation of, as flagship for West India Squadron 636
Union, U. S. S. Movements of 792
Vandalia, U. S. S. Orders for 680

Parrott, Enoch G.—Continued. Page.
Foreign vessels boarded and warned by 779
Mentioned 631, 692
Reports of.
Hannah M. Johnson. Capture of 686
Perry, U. S. brig. Condition of, and fitting out of Confederate vessels. 780
Parrott, Robert P. Mentioned 646
Parsons, J. H. Mentioned 136
Parsons, Joseph. Mentioned 290, 293
Passpatansy Creek, Maryland. Expedition to. Report of Foxhall A. Parker 520
Paston, Thomas. Mentioned 138
Pate, I. Mentioned 138
Patrick Henry,* C. S. S.
Mentioned 140, 295, 331
Orders for movements 812
Statement of William Harris concerning 294
Patterson, Robert O. Mentioned 795
Patuxent River, Maryland. Disposition of boats seized in. Report of Foxhall A. Parker 577
Paulding, Hiram. Correspondence with S. H. Stringham 665, 667, 682
Pawnee, U. S. S. Mentioned 186, 678, 688, 689, 733, 762, 785, 786
Payne, D. J. Arrest of.
Report of William T. Street 297
Mentioned 607
Payne, Nicholas. Mentioned 698
Peabody, George. See *George Peabody, Steamer.*
Pearce, D. C. See *D. C. Pearce, Bark.*
Pearson, ———. Mentioned 8
Pearson, George F. Mentioned 50
Pegram, Robert B.
Appointed to command
Pig Point battery 801
Sewell's Point battery 800
Mentioned 753, 803, 806
Relieved of command of Sewell's Point battery 801
Report of engagement between U. S. S. Harriet Lane and Confederate battery on Pig Point, Va 699
Peirce, Mr. Mentioned 778
Pelham, John. Mentioned 187, 188
Pelot, James. Mentioned 655
Pelot, Thomas P.
Mentioned 649, 650, 653, 654, 657, 658
Testimony concerning capture of ship A. B. Thompson 655
Pembroke, Steamer. Mentioned 632
Pendergrast, Garrett J.
Correspondence with
Baltimore, Md., U. S. district judge 695, 722
Braine, Daniel L 737, 738
Bruce, David 710
Butler, Benjamin F 674, 679, 700, 706, 730
Carr, Overton 718
Chandler, William 723, 732
Crosby, Peirce 712
De Russy, René E 635

* Also called the Yorktown, which see.

Page.
Phillips, Pilot. Mentioned 738, 739
Phillips, Wesley J. Mentioned 239
Phinick, Mr. Mentioned 5
Phinney, Alvin.
Mentioned 240, 241
Report of captures made by Potomac Flotilla 88, 291, 308
Piankatank River, Virginia.
Affairs in. Reports of
Harwood, A. A 362
Hooker, Edward 372
Army expedition to. Report of G. C. Schulze 405, 406
Destruction of schooner in. Report of P. Hays 207
Reconnoissance in. Reports of
Brice, J. J 45
Magaw, Samuel 45
Wyman, R. H 44
Picayune, Vessel. Mentioned 783
Pickens, Francis W. See *South Carolina, Governor of.*
Pickerel, Ann. See *Ann Pickerel, Schooner.*
Picket Boat No. 2 (U. S.). Capture and destruction of, by Confederates on Potomac River 486–488
Picket Boat No. 4 (U. S.). Mentioned 567
Picket Boat No. 6 (U. S.). Mentioned 548, 567
Piedmontese, Steamer. Operations, etc., in Potomac River 33–36
Pierce, Fleet. Mentioned 227
Pierson, Abraham B.
Mentioned 24
Report of movements of U. S. schooner Howell Cobb 51
Pig Point, Va.
Armament of Confederate battery at 806
Engagement between U. S. S. Harriet Lane and Confederate battery at, June 5, 1861. Reports of
Faunce, John 698
Huger, Benjamin 699
Pegram, R. B 699
Jones, J. Pembroke, appointed to command battery at 800
Pegram, R. B., appointed to command battery at 801
Pilot, Schooner. Release of 92
Pinn, David. Mentioned 537
Pinola, U. S. S. Passage of Confederate batteries on Potomac River by ... 20, 22, 23
Pioneer, Bark. Disposition of 667
Piper, E., Mrs. Mentioned 9
Planter, Steamer. Mentioned 312
Pleasonton, Alfred. Correspondence with S. Williams 264
Plowden, E. T. Mentioned 112, 128, 177, 178, 206
Plunkett, James L.
Mentioned 79, 101, 111, 113, 124, 142, 168, 267
Report of seizure of schooner Mail 55
Plymouth, Ship. Mentioned 779, 806, 808
Pocahontas, U. S. S. Mentioned 664, 678
Poindexter, C. B. Correspondence with commandant of Norfolk navy yard .. 810
Point Lookout, Md.
Designated a depot for Confederate prisoners 313

Pendergrast, Garrett J.—Continued. Page.
Reports of.
West India Squadron.
Affairs of 706
Cooperation of, with the Army 675
Movements of vessels 737
Need of paymaster for 669, 691, 695, 708
Yankee, U. S. S. Condition of 696
Young America, U. S. S. Condition of 701
Pendleton, Dr. Mentioned 365
Pendleton, A. S. Correspondence with Daniel H. Hill 188
Penguin, U. S. S.
Condition of 743
Cruise from July 8 to 11, 1861 784
Mentioned 635, 662, 664, 739, 754, 755, 767, 790
Ordered to duty in Atlantic Blockading Squadron 734
Pennsylvania Troops. Mentioned. Cavalry—Regiment: 8th, 183, 186.
Penobscot, U. S. S. Mentioned 254
Pensacola, U. S. S.
Arrival of, at Hampton Roads 18
Mentioned 12, 682, 683
Orders for movements 15
Passage of Confederate batteries on Potomac River by 16-19
Preparation of, to pass Confederate batteries on Potomac River 11
Pentz, John W. Mentioned 219
Pentz, Nellie. See *Nellie Pentz, Steamer.*
Periwinkle, U. S. S.
Attached to Potomac Flotilla 495, 496
Mentioned 502, 506, 508-511, 529, 531, 532, 549, 562, 564, 565, 567, 574
Orders for movements 512
Perry, U. S. brig.
Captures made by 686, 691-693
Condition of 780
Mentioned 8, 627, 635, 654, 657, 662, 664, 665, 683, 714, 753, 779, 781
Movements of 631, 639
Operations, etc., in Atlantic Blockading Squadron 779
Orders for movements 628, 640
Supplies for 641
Perry, Franklin. Mentioned 491
Peters, Edward D., & Co. Mentioned 643
Peterson, August. Mentioned 738, 739
Peterson, Eric P. Mentioned 496
Peterson, J. C.
Correspondence with Vice-President, U. S 782
Mentioned 781
Pettit, Charles H. Mentioned 685
Petty, E. J. See *E. J. Petty, Schooner.*
Phelps, Charles R. Mentioned 187
Phelps, J. W. Mentioned 768
Phelps, Thomas S.
Mentioned 62, 111, 177
Reports of.
Potomac River. Violation of blockade of 60
Stewart, R. H. Expedition to house of 106
Philip, Captain. Mentioned 800

Potomac Flotilla—Continued. Page.
Condition of 142, 307, 497, 498
Cooperation of, in the movements of the Army of the Potomac.
Communication from Foxhall A. Parker 419
Orders and instructions.
Navy Department, U. S 162, 164, 417–420, 428, 434, 435, 547
Eastman, Thomas H 419, 426
Parker, Foxhall A 420, 426, 430, 431, 437
Reports of
Eastman, Thomas H 417, 426, 432–435
Hooker, Edward 426–430, 434, 435, 439, 526, 527
Parker, Foxhall A 418, 420, 421, 427–429, 431, 435, 436, 438, 440, 537
Street, William T 431
See also *Aquia Creek, Virginia. Cooperation of the Navy with the Army at;* also entries under *Fredericksburg* and *Port Royal, Va.*, and *Rappahannock River, Virginia.*
Decrease of force 567, 570, 573, 574, 577
Depredations committed by. Report of Edward Hooker 387
Disbanding of.
General order of Commander Foxhall A. Parker 578
Orders and instructions, Navy Department, U. S 576
Disposition of vessels 52, 54, 56, 58, 66, 77, 245, 248, 257, 259, 260, 287, 361, 362, 366, 367, 374, 380, 389, 391, 408, 441, 496, 502, 506, 508, 515, 531, 548, 562, 577
Eastman, F. S., appointed chief of staff 479
Eastman, Thomas H.
Appointed fleet captain of 406
Relieved of duty as fleet captain 479
First Division.
Franklin, S. R., appointed to command 99
Hooker, Edward, appointed to command 393
Hooker, Edward, relieved of command 566
Shankland, W. F., appointed to command 566
Vessels constituting 204
General instructions for government of 74, 79, 98, 99, 150, 154, 205, 248, 393, 394
Harwood, A. A.
Appointed to command 82
Relieved of command of 76, 379
Increase of force 408, 409, 468, 469, 473, 474, 478, 493–495, 497, 501, 503, 507, 525–527, 537, 540, 547, 548
Inspection of.
Orders and instructions, Navy Department, U. S 316
Report of A. A. Harwood 319
Insufficiency of force 19, 103, 242, 260, 307, 492
Ives, T. Poynton, appointed fleet captain 279
Limits of command 77, 94, 204, 407, 468, 505, 568
List of stations 150
McCrea, E. P., relieved of duty in, as fleet captain 279
Movements of, in consequence of raid of Confederate Army into Maryland under General Early.
Communications from commandant of Washington navy yard, ... 461
Orders and instructions.
Eastman, Thomas H 463
Navy Department, U. S 458–461, 463
Taylor, James 460, 461

Potomac Flotilla—Continued. Page.
Movements of, in consequence of raid of Confederate Army into Maryland under General Early.
Reports of
Eastman, Thomas H. 458, 460
McConnell, George E. 466
Parker, Foxhall A. 459–463, 465
Street, William T. 462, 463, 465, 466
Operations of 3–613
Parker, Foxhall A.
Appointed to command 379
Assumes command of 381
Precautionary measures against attack upon vessels of.
Communications from Navy Department, U. S. 310
Orders and instructions.
Harwood, A. A. 357
Navy Department, U. S. 495, 497, 498, 500, 501
Parker, Foxhall A. 393, 413, 415
Taylor, James 504
Reports of
Harwood, A. A. 157, 310
Hooker, Edward 359
Kilty, A. H. 500, 501
Linnekin, T. J 325
Parker, Foxhall A. 502
Roderick, Edmund A., appointed chief of staff of 483
Second Division.
Hooker, E.
Appointed to temporary command 356
Relieved of command 393
Magaw, Samuel, appointed to command 100
Shankland, William F., appointed to temporary command 181
Street, William T., appointed to temporary command 206
Vessels constituting 204
Supplies for.
Communications from Samuel Magaw 177
Orders and instructions.
Harwood, A. A 175, 176, 180, 201
McCrea, E. P. 181, 182, 206
Navy Department, U. S. 173, 174
Parker, Foxhall A. 512, 514, 516
Taylor, James 504
Reports of
Harwood, A. A 84, 169, 170, 173, 174, 178
Hooker, Edward 417, 474, 512, 515
McCrea, E. P. 170–173
McGowan, John, jr 207
Magaw, Samuel 78, 84, 174
Street, William T 513
Wyman, R. H. 8
Transfer of command of, to A. A. Harwood 84
Wilkes, Charles.
Appointed to command 72
Relieved of command of 82
Wyman, R. H.
Assumes command of 3
Relieved of command of 50

Potomac River. Page.
Blocking of channel of.
Orders and instructions, Navy Department, U. S. 29
Report of R. H. Wyman 27
Defenses of. See *Virginia. Preparations for defense of.*
Operations on 3–613
Passage of Confederate batteries on, by vessels of the Potomac Flotilla.
Communications from Navy Department, U. S. 12
Orders and instructions, Navy Department, U. S. 15, 16
Reports of
Morris, Henry W 11, 16–18
Navy yard, Washington, Commandant of 16, 20, 22, 23
Parker, Foxhall A 18
Street, William T 22
Wyman, R. H 22
Proposition of Lieutenant Wyman for operations against Confederate batteries on 20
Regulations governing fishing in 21, 242, 247
Reports and correspondence regarding navigation of 316, 378, 384, 479
Potter, Sloop.
Capture of 208
Mentioned 588
Potter, Edward E. Mentioned 629
Potter, William H. Mentioned 508, 531
Powell, A. C. See *A. C. Powell, U. S. S.*
Powell, Benjamin. Mentioned 365
Pratt, Mr. Mentioned 187, 197, 198, 201, 587
Pratt, Robert H. Mentioned 522
Pratt's Point, Va.
Engagement at, December 4, 1862. See *Port Royal, Va.*
Reconnoissance of. Orders and instructions, William F. Shankland 189
Prechett, James. Mentioned 526
Prentiss, George A. Correspondence with Navy Department, U. S. 735
President, C. S.
Mentioned 499, 692, 693, 703, 744, 745, 797
Proclamation concerning letters of marque 796
President, U. S.
Assassination of.
Death of assassin 563
General Orders announcing 553
Orders of Navy Department, U. S., concerning 554, 556, 563, 564
Search for assassin.
Communications from
Drew, C. H 555
Taylor, James 554
Letter of Navy Department, U. S., censuring Commander F. A. Parker 559
Orders and instructions.
Eldridge, J. H 555
Navy Department, U. S 555–557
War Department, U. S 555
Reports of
Arthur, W. A 556
Eastman, Thomas H 557
Parker, Foxhall A 557–559
Correspondence with James Hepenstall et al 627

Potomac Flotilla—Continued. Page.
Movements of, in consequence of raid of Confederate Army into Maryland under General Early.
Reports of
Eastman, Thomas H. 458, 460
McConnell, George E 466
Parker, Foxhall A. 459–463, 465
Street, William T 462, 463, 465, 466
Operations of 3–613
Parker, Foxhall A.
Appointed to command 379
Assumes command of 381
Precautionary measures against attack upon vessels of.
Communications from Navy Department, U. S 310
Orders and instructions.
Harwood, A. A 357
Navy Department, U. S 495, 497, 498, 500, 501
Parker, Foxhall A 393, 413, 415
Taylor, James 504
Reports of
Harwood, A. A 157, 310
Hooker, Edward 359
Kilty, A. H 500, 501
Linnekin, T. J 325
Parker, Foxhall A 502
Roderick, Edmund A., appointed chief of staff of 483
Second Division.
Hooker, E.
Appointed to temporary command 356
Relieved of command 393
Magaw, Samuel, appointed to command 100
Shankland, William F., appointed to temporary command 181
Street, William T., appointed to temporary command 206
Vessels constituting 204
Supplies for.
Communications from Samuel Magaw 177
Orders and instructions.
Harwood, A. A 175, 176, 180, 201
McCrea, E. P 181, 182, 206
Navy Department, U. S 173, 174
Parker, Foxhall A 512, 514, 516
Taylor, James 504
Reports of
Harwood, A. A 84, 169, 170, 173, 174, 178
Hooker, Edward 417, 474, 512, 515
McCrea, E. P 170–173
McGowan, John, jr 207
Magaw, Samuel 78, 84, 174
Street, William T 513
Wyman, R. H 8
Transfer of command of, to A. A. Harwood 84
Wilkes, Charles.
Appointed to command 72
Relieved of command of 82
Wyman, R. H.
Assumes command of 3
Relieved of command of 50

Provost, Nelson—Continued. Page.
Reports of.
Anacostia, U. S. S.
Captures made by 157
Operations in Rappahannock River 78
Brandywine Hill, Va. Engagement at, December 10, 1862 193
Port Royal, Va.
Engagement at, December 4, 1862 ..... 184, 185
Expedition to 67
Potomac Flotilla. Movements of vessels of 65
Rappahannock River. Expedition down 73
Pruitt, ——. Mentioned 483
Pruitt, William. Mentioned 762
Purdy, William W. Mentioned 318
Purrell, Captain. Mentioned 309
Purviance, Hugh Y.
Correspondence with Navy Department, U. S 718
Reports of St. Lawrence, U. S. frigate.
Deficiency in complement 775, 791
Movements of 32, 784
Pusey, Steam tug. Mentioned 19
Putnam, William G. See *William G. Putnam, U. S. S.*
Pye, Mr. Mentioned 87
Pyne, Charles B. Mentioned 536, 599
Quackenbush, S. P. Report of cooperation of the Navy with the Army at Aquia Creek, Virginia 71, 72, 75
Quaker City, U. S. S.
Attack upon boat party from, by Confederates 742, 749
Captures made by 683, 700
Condition of 691, 706, 712, 713, 718, 719
Efficient service performed by 667
Gratuitous service rendered by 631
Mentioned 630, 662, 674, 675, 681, 696, 705, 707, 708, 715, 716, 725, 726, 753, 769, 774, 790
Movements of 737, 755
Recharter of, by U. S. Government 677
Request for additional officers 759
Quall, Isaac. Mentioned 382
Quayle, Thomas. Mentioned 632
Que, Franklin. Mentioned 145
Queen of the Fleet, Sloop.
Capture of 222
Mentioned 589
Quesenbury, Mr. Mentioned 149, 150
R. C. A. Ward, Schooner. Mentioned 747
R. R. Cuyler, U. S. S. Mentioned 463, 464
Racer, U. S. schooner.
Captures made by 240, 291, 308
Engagement with Confederate battery at Mathias Point, Va 306
Mentioned 100, 206, 207, 241, 243, 248, 260, 297, 307
Operations, etc., in Potomac River 88
Radford, William.
Correspondence with Navy Department, U. S 507
Mentioned 504, 521, 565, 594
Railly, William H. Mentioned 407
Rainbow, Schooner. Mentioned 19

President, U. S.—Continued. Page.
Mentioned 33, 47, 48, 53, 212, 260, 560, 577, 578, 603, 618–621, 623, 625, 631, 638, 640, 641, 660, 663, 671, 796
Pressley, B. C. Correspondence with Treasury Department, C. S 652
Preston, Samuel. Mentioned 239
Price, Pilot. Mentioned 18, 329
Price, William H. See *William H. Price, Confederate schooner.*
Prichett, James M. Mentioned 594
Prickett, M. A., Mrs. Mentioned 685
Primrose, U. S. S.
Abstract log, February 26, 1863, to April 19, 1865 605–609
Attached to Washington navy yard 574
Boat expedition from, to Monroe's Creek, Virginia 251
Captures made by 245, 266–270, 282, 284, 289, 297, 303, 421, 479, 510
Expeditions to
Mattox Creek, Virginia 304
Rosier's Creek, Virginia 249, 251
Stratford Mills, Va 287
Tappahannock, Va 277, 278
Mentioned 244, 246, 248, 254, 256–258, 260, 264, 271, 273, 280, 281, 283, 285, 287, 288, 308, 317, 331, 350, 359, 362, 367, 374, 408, 425, 426, 436, 437, 496, 502, 506, 508, 531, 567, 582, 584, 590
Orders for movements 239, 255
Relieved from duty in Potomac Flotilla 574
Privateers, Confederate.
Depredations committed by.
Communications from Navy Department, U. S 787, 793
Report of C. R. P. Rodgers 793
Search for.
Orders and instructions, Navy Department, U. S 766
Report of S. H. Stringham 767
Prizes. Disposition of.
Communications from
Navy Department, U. S 709
Pendergrast, G. J 683, 695, 700, 701, 709, 722
Sartori, L. C 731
Stringham, S. H 638, 662, 732
Orders and instructions.
Navy Department, U. S 641, 667, 751, 762
Pendergrast, G. J 670, 673–675
Reports of
Eagle, Henry 680
McCook, R. Sheldon 693
Pendergrast, G. J 725
Stringham, S. H 667, 726, 749
See also *Potomac Flotilla. Certificates of captures made by vessels of.*
Provost, Nelson.
Correspondence with
Harwood, A. A 326
Shankland, W. F 184
Street, William T 364
Mentioned 66, 77, 78, 205, 209, 212, 258, 270, 274, 278, 282, 283, 302, 303, 353, 357, 363, 372, 387, 592
Reports of.
Alleghanian, Ship. Burning of 137
Anacostia and Dragon, U. S. steamers. Movements of 258

Page.
Reindeer, Sloop. Capture of 38
Reindeer, Steamer. Mentioned 11, 156
Reliance, U. S. S.
Attempt to destroy.
Orders and instructions.
Harwood, A. A 326
Navy Department, U. S 325–327
Reports of
Harwood, A. A 325, 326, 328
Kilpatrick, J 327, 328
Meade, George G 327, 328
Street, William T 331
Weidman, John 330
Boat expedition from, into Sturgeon Creek, Virginia 62–65
Capture of, by John Taylor Wood and party, August 23, 1863.
Findings and opinions of the court of enquiry 335–339
Joint resolution of thanks of Confederate Congress 346
List of officers 333
Orders and instructions, Navy Department, U. S 333, 334
Reports of
Board of officers 333
Harwood, A. A 324, 332, 333
Linnekin, T. J 324
Magaw, Samuel 322, 323
Wood, John Taylor 344
Statements of
Spillman, William D 323
Walters, Henry 342
Captures made by 62, 143, 165, 166, 246, 247
Operations, etc., in
Potomac River 83, 168
Rappahannock River 33–36
Mentioned 51, 54, 56, 58, 66, 70, 77, 78, 80, 81, 99, 128, 205, 206, 218, 254, 257, 261, 262, 267, 273, 310, 314, 340, 341, 343, 345, 354, 358, 395, 420, 430, 511, 591, 592, 635, 662, 664, 756, 767
Reliance, U. S. revenue steamer. Location of persons implicated in death of commander of. Report of William T. Street 483
Renshaw, Alexander D. Mentioned 333, 336, 339
Rescue, U. S. S.
Attached to
Potomac Flotilla 478
Washington navy yard 574
Mentioned 496, 502, 506, 508, 531, 567, 583
Resolute, U. S. S.
Assistance rendered U. S. transport steamer George Peabody 305, 306
Boat expedition from, into Sturgeon Creek, Virginia 62–65
Captures made by 64, 154, 413
Expedition to Machodoc Creek, Virginia 410
Mentioned 50, 54, 56, 58, 66, 77–79, 86, 96, 99, 124, 128, 134, 147, 153, 204, 207, 246, 255–257, 260, 287, 289, 295, 308, 313, 314, 354, 359, 362–364, 366, 367, 374, 380, 408, 409, 422, 426, 438, 447, 465, 496, 502, 506, 508, 531, 595, 600, 635, 662, 664, 785, 786
Operations, etc., in
Mattox Creek, Virginia, March 16–18, 1865 534–537
Rappahannock River 33–36
Relieved from duty in Potomac Flotilla 567, 574

Page.
Revere, Captain. Mentioned 121
Reynolds, A. W. Report of condition of U. S. S. Dawn 724
Rhode Island Troops. Mentioned. Infantry—Regiment: 4th, 73.
Rice, Albert F. Mentioned 487
Rice, Ann. Mentioned 146
Rice, Daniel. Mentioned 211
Rice, Hugh. Mentioned 158, 167
Rich, Robert. Mentioned 81
Rich, William. Mentioned 81
Richard Vaux, Sloop-yacht.
Capture of 288, 289
Mentioned 607
Richards, John M. Mentioned 129
Richardson, Colonel. Mentioned 771, 774
Richardson, George. Mentioned 756
Richardson, Thomas. Mentioned 80, 85
Richmond, C. S. S. Mentioned 117
Riley, B. M. Mentioned 73
Riley, Margaret. Mentioned 685
Riley, Rosanna. Mentioned 684
Ripley, Henry E. Mentioned 113
Risby, Richard S. Mentioned 153
Roach, Mary. Mentioned 520, 685
Roach, Peter. Mentioned 520
Roane, Laurence D.
Correspondence with F. A. Parker 494
Mentioned 493
Roanoke, Steamer.
Cancellation of contract with Virginia navy 802
Importance of work performed by 802
Use of, by Virginia navy, authorized 802
Roanoke, U. S. S.
Arrival of, at Hampton Roads 764
Cruise of, from Hampton Roads to Charleston, S. C., and exchange of shots with Confederate battery at Hatteras Inlet, July 10, 1861 791
Departure of, from Point Lookout for Hampton Roads 505
Guarding Point Lookout, Md 472
Hoisting of flag of West India Squadron on 766
Mentioned 504, 636, 678, 751, 774, 777, 792, 793, 795, 803
Orders for movements 736, 766, 767, 769
Preparation of
As flagship for Home Squadron 633
For protection against attack by torpedoes 500–502
Rumor of preparations for attack upon 495, 498, 501, 502
Suggestions of Flag-Officer Pendergrast concerning 640
Robb, Master. Mentioned 345
Robb, Robert G. Mentioned 805
Robbins, Ezra L. Mentioned 20
Robbins, John. Mentioned 318, 591
Robert Clinch, Steamer. Mentioned 714
Robert Knowles, Schooner. Capture of 349
Robert Leslie, U. S. S. See *Leslie, U. S. S.*
Robert Wilbur, Schooner. Destruction of 149
Roberts, Joseph. Mentioned 586
Roberts, Richard E. Mentioned 138

Page.
Roberts, Samuel H. Mentioned 523, 524, 526, 528
Robertson, Wilson. Mentioned 297
Robinson, A. P. Mentioned 155
Robinson, Edward. Mentioned 228, 229
Robinson, Henry. Mentioned 43
Robinson, James W. Mentioned 595
Robinson, John F. D.
Mentioned 269, 270, 273, 274, 277, 290, 321, 322, 324, 333, 336, 341–343, 345
Reports of.
Arctic and Sarah, Schooners. Capture of 277
Emily, Schooner. Capture of 276
Robrecht, John H. Mentioned 161
Rochelle, James H. Mentioned 803, 804
Rockwell, John E. Mentioned 730
Roderick, Edmund A.
Appointed chief of staff of Potomac Flotilla 483
Mentioned 412, 496, 502, 506, 508, 531
Rodgers, C. R. P. Report of depredations committed by C. S. privateer Jefferson Davis 793
Rodman, Thomas J. Mentioned 745
Rodney, Thomas M.
Correspondence with Treasury Department, U. S 720
Mentioned 719, 730
Roebrick, Mr. Mentioned 359
Rogers, Henry J.
Mentioned 152
Report of capture of sloop G. W. Green 156
Rogers, William. Mentioned 20
Rogers, William P.
Correspondence with A. A. Harwood 98, 346
Mentioned 132, 133, 136, 137
Report of examination of schooner George H. Berry 87
Rollins, Carolus W. Mentioned 33
Rollins, Louis N. Mentioned 119, 145, 245, 249–252
Rootes, Thomas R. Mentioned 579, 806
Rose, J. G. Mentioned 629
Rose, R. Mentioned 231
Rose, Richard P. Mentioned 320
Rosier's Creek, Virginia. Expedition to. Report of William T. Street 249
Rosley, E. M. Mentioned 20
Rosser, Thomas L. Mentioned 345
Rotary, U. S. transport steamer. Depredations committed by, near mouth of Rappahannock River 70, 79
Roundout, Steamer.
Capture of 38
Mentioned 37
Rowan, Stephen C. Mentioned 785
Rowbottom, James. Mentioned 337, 339
Rowe, William. Mentioned 211
Rucker, Daniel H.
Correspondence with Navy Department, U. S 453
Mentioned 163, 206, 384
Rude, William R. Mentioned 273, 274
Ruffin, Edmund, jr. Mentioned 809
Russell, Captain. Mentioned 705

Page.
Russell, Charles. Mentioned 345
Russell, John H. Mentioned 684
Rutledge, John. Mentioned 657
Ryan, Michael. Mentioned 65
S. J. Waring, Schooner. Capture of 787, 793, 794
S. H. Poole, Schooner. Expedition to Gwynn's Island, Virginia 147
S. S. Jones, Schooner. Seizure of 64
Sabel, F. Mentioned 752
Sabine, Confederate schooner. Mentioned 63, 611
Sable, ——. Mentioned 69
Saco, U. S. S. Mentioned 460
Saddler, Susan. Mentioned 115
Sadler, George. Mentioned 32
St. George's Island. Expedition to. Reports of
Harwood, A. A 375
Provost, Nelson 157
St. Inigoes. Sale of naval property at.
Orders and instructions, Navy Department, U. S 576
Report of Foxhall A. Parker 577
St. John, G. P. Mentioned 161
St. Lawrence, U. S. frigate.
Deficient in number of officers 775, 791
Mentioned 26, 754
Movements of 31, 32, 784
Ordered to duty in Atlantic Blockading Squadron 718
St. Mary's, Schooner. Capture of, by John C. Braine, March 31, 1865 ..... 540, 542
St. Mary's, Steamer. Mentioned 735
St. Mary's, U. S. ship. Mentioned 744
St. Nicholas, Steamer.
Destruction of 37
Mentioned 26, 30, 31, 34, 751, 755, 762, 763, 785
St. Petersburg, U. S. Consul at. Correspondence with State Department, U. S 757
Sally Magee, Bark. Capture of 749
Sally Mears, Schooner.
Capture of 756
Disposition of 762
Mentioned 763
Salmi, Russian bark. Mentioned 779, 780
Sampson, J. Mentioned 599
Samuel First, Schooner. Seizure of 265, 268
Sanders, A. M, Correspondence with R. H. Wyman 43
Sands, George L. Mentioned 536
Sanford, John. Mentioned 274–276
Sangamon, U. S. S.
Mentioned 348
Operations in consequence of capture of steamers Satellite and Reliance 326, 328–330
Orders for movements 325
Santee, U. S. ship.
Condition of 777
Mentioned 769, 774, 780, 784, 788
Sarah, Schooner. Capture of 277
Sarah Ann, Schooner.
Capture of 38
Mentioned 611

Page.
Sarah Lavinia, Schooner. Capture of 266–271
Sarah Margaret, Schooner.
Burning of 285
Mentioned 581
Sarah Minge, Schooner. Mentioned 193, 588
Sartori, Lewis C.
Correspondence with
Cadwalader, John 731
Kautz, Albert 731
Navy Department, U. S 666
Mentioned 666, 711, 714, 726, 781
Report of convoy and protection of U. S. transports 686
Sassacus, U. S. S. Orders for movements 565
Satellite, U. S. S.
Abstract log, December 16, 1861, to September 15, 1862 609–611
Arrival of, at Aquia Creek, Virginia 70
Assistance rendered schooner Henry Wolcott 290
Attempt to destroy.
Orders and instructions.
Harwood, A. A 326
Navy Department, U. S 325–327
Reports of
Harwood, A. A 325, 326, 328
Kilpatrick, J 327, 328
Meade, George G 327, 328
Street, William T 331
Weidman, John 330
Capture of, by John Taylor Wood and party, August 23, 1863.
Capture of schooners Golden Rod, Coquette, and Two Brothers 344–346
Findings and opinions of court of enquiry 339–342
Joint resolution of thanks of Confederate Congress 346
List of officers 333
Orders and instructions, Navy Department, U. S 333, 334
Reports of
Board of officers 333
Harwood, A. A 324, 331, 332, 333
Linnekin, T. J 324
Magaw, Samuel 322, 323
Sommers, Rudolph 332
Wood, John Taylor 344
Statement of William D. Spillman 323
Captures made by 145, 152, 270, 274–277, 304, 321
Destruction of wreck of. Report of Thomas H. Eastman 439
Engagement with Confederate batteries at Brandywine Hill, Va., December 11, 1862 195
Examination of wreck of 439
Hays, Peter, assumes command of 91
Mentioned 28, 75, 90, 96, 100, 105, 123, 125, 128, 130, 143, 162, 173, 174, 177, 178, 182, 189, 198, 200, 203, 204, 206–208, 215, 248, 254, 257, 260, 263, 265, 267, 268, 273, 281, 283, 284, 287, 303, 310, 314, 320, 335, 336, 337, 338, 343, 354, 395, 420, 430, 588, 590–592, 600, 606
Operations, etc., in Rappahannock River 33–36, 269
Saugus, U. S. S. Orders for movements 571, 572
Saunders, George. Mentioned 105
Saunders, William. Mentioned 105

Page.
Russell, Charles. Mentioned 345
Russell, John H. Mentioned 684
Rutledge, John. Mentioned 657
Ryan, Michael. Mentioned 65
S. J. Waring, Schooner. Capture of 787, 793, 794
S. H. Poole, Schooner. Expedition to Gwynn's Island, Virginia 147
S. S. Jones, Schooner. Seizure of 64
Sabel, F. Mentioned 752
Sabine, Confederate schooner. Mentioned 63, 611
Sable, ———. Mentioned 69
Saco, U. S. S. Mentioned 460
Saddler, Susan. Mentioned 115
Sadler, George. Mentioned 32
St. George's Island. Expedition to. Reports of
Harwood, A. A. 375
Provost, Nelson 157
St. Inigoes. Sale of naval property at.
Orders and instructions, Navy Department, U. S 576
Report of Foxhall A. Parker 577
St. John, G. P. Mentioned 161
St. Lawrence, U. S. frigate.
Deficient in number of officers 775, 791
Mentioned 26, 754
Movements of 31, 32, 784
Ordered to duty in Atlantic Blockading Squadron 718
St. Mary's, Schooner. Capture of, by John C. Braine, March 31, 1865 ..... 540, 542
St. Mary's, Steamer. Mentioned 735
St. Mary's, U. S. ship. Mentioned 744
St. Nicholas, Steamer.
Destruction of 37
Mentioned 26, 30, 31, 34, 751, 755, 762, 763, 785
St. Petersburg, U. S. Consul at. Correspondence with State Department, U. S 757
Sally Magee, Bark. Capture of 749
Sally Mears, Schooner.
Capture of 756
Disposition of 762
Mentioned 763
Salmi, Russian bark. Mentioned 779, 780
Sampson, J. Mentioned 599
Samuel First, Schooner. Seizure of 265, 268
Sanders, A. M, Correspondence with R. H. Wyman 43
Sands, George L. Mentioned 536
Sanford, John. Mentioned 274–276
Sangamon, U. S. S.
Mentioned 348
Operations in consequence of capture of steamers Satellite and Reliance 326, 328–330
Orders for movements 325
Santee, U. S. ship.
Condition of 777
Mentioned 769, 774, 780, 784, 788
Sarah, Schooner. Capture of 277
Sarah Ann, Schooner.
Capture of 38
Mentioned 611

Page.
Sewell, George. Report of condition of U. S. S. Susquehanna 773
Sewell's Point, Va.
Maury, W. L., appointed to command battery at 801
Pegram, R. B.
Appointed to command battery at 800
Relieved of command of battery at 801
Engagement between U. S. steamers Monticello and Thomas Freeborn and Confederate battery at, May 18 and 19, 1861.
Reports of
Braine, D. L 645
Colquitt, Peyton H 647
Eagle, Henry 644
Gwynn, Walter 646
Navy yard, Washington, Commandant of 645
Stringham, S. H 644
Seymour, Isaac N. See *Isaac N. Seymour, U. S. S.*
Seymour, Perry. Mentioned 87
Shankland, William F.
Correspondence with
Brown, Charles H 184
Hooker, E 514, 529
McCrea, E. P 91, 108, 181, 182
Provost, Nelson 184
Street, William T 183, 189
Mentioned 97, 98, 181, 191, 512, 531, 532, 566, 587
Reports of.
Cherrystone Inlet. Protection of Government property at 514
Currituck, U. S. S. Arrival of, at Aquia Creek, Virginia 71
Port Royal, Va. Engagement at, December 4, 1862 183
Tiger, U. S. revenue cutter. Assistance rendered 517
Shannon, Frank. Mentioned 368
Sharpe, George H. Mentioned 472
Shaw, Emanuel. Statement of, concerning affairs in Virginia 117
Shelton Creek, Virginia. Destruction of salt works on, June 30, 1864. Reports of
Arthur, W. A 455
Hooker, Edward 454
Parker, Foxhall A 454
Sheppardson, William. Mentioned 345
Sherber, Alexander. Mentioned 307
Sheridan, Philip.
Correspondence with Foxhall A. Parker 470
Mentioned 77, 96, 97, 131, 147, 150, 151, 153, 204, 245, 251, 294, 298, 386, 470, 484, 502, 506, 508, 531, 533
Report of engagement at Brandywine Hill, Va., December 10, 1862 194
Sheridan, Philip H. Mentioned 447
Shiels, Captain. Mentioned 799
Shinn, Stephen. Correspondence with
Navy Department, U. S 86
Wadsworth, James S 94
Shipping Point, Va.
Abandonment of battery on. Report of R. H. Wyman 23, 25
Destruction of battery on. Report of Samuel Magaw 121
See also *Potomac River. Passage of Confederate batteries on, by vessels of Potomac Flotilla.*

Pages.

Savage, Hugh H.
Mentioned 121, 135, 136, 531
Report of captures made by U. S. schooner Matthew Vassar 120, 134
Savannah, C. S. privateer schooner.
Capture of 691-693
Mentioned 714, 726, 727, 732, 737, 749, 780
Savannah, U. S. ship.
Mentioned 754, 790, 791
Movements of 795
Ordered to duty in Atlantic Blockading Squadron 734
Savannah, Ga. Fitting out Confederate vessels at. Report of E. G. Parrott. 780
Sawtelle, Colonel C. G. See *Colonel C. G. Sawtelle, Steamer.*
Scearce, William W. Mentioned 397
Schenck, Robert C. Correspondence with Henry W. Halleck 310
Scherr, E. N., jr. Mentioned 766
Schley, Winfield S. Mentioned 629
Schohardt, Mr. Mentioned 288
Schulze, Gerhard C.
Correspondence with
Parker, Foxhall A 390
Street, William T 468
Mentioned 281, 322, 375, 394, 402, 429, 471, 493, 494, 598, 600
Reports of.
George Peabody, U. S. transport. Attack upon, at Mathias Point, Va.. 305
Jacob Bell, U. S. S. Captures made by 298
Leuty, Joseph. Statement made by 395
Piankatank River. Army expedition to 405, 406
Schwarzkopt, William. Mentioned 493, 494
Scott, Colonel. Mentioned 65
Scott, Charles. Mentioned 146
Scott, John A. Mentioned 222
Scott, Robert W. Mentioned 792
Scott, Winfield.
Correspondence with Union 715
Mentioned 715, 730
Sea Bride, Bark. Mentioned 120
Sea Flower, Schooner. Capture of 38
Sea Queen, British bark. Mentioned 779
Seabrook, William. See *William Seabrook, Confederate steamer.*
Sebastian, J. H. Mentioned 322, 600
Seeley, Mr. Mentioned 444
Seeley, J. E. Mentioned 424
Seeson, James. Mentioned 310
Segar, Miss. Mentioned 761, 763, 774, 783
Segar, Joseph. Mentioned 761, 763
Selden, Mr. Mentioned 730
Selfridge, Thomas O., jr.
Appointed to command U. S. S. Yankee 705, 711, 712
Mentioned 58, 674
Seminole, U. S. S.
Attached to Atlantic Blockading Squadron 783
Mentioned 786, 787
Serpell, G. M. Mentioned 283
Sewall, F. D. Report of capture of U. S. transport steamer Harriet De Ford. 541
Seward, William H. Mentioned 555, 620, 621
For correspondence, see *State Department, U. S.*

Page.
Smith, William Taylor. Mentioned 805
Smith, William V. Mentioned 763
Smith's Island.
Damage done to light-house on. Report of William W. State 315
Capture of boat from light-ship at. Report of William A. Arthur 489
Measures for protection of light boat at.
Orders and instructions, Navy Department, U. S 519
Reports of
Nelson, Thomas 507
Parker, Foxhall A 519
Rumor of Confederate expedition to 476, 477
Smithers, John. Mentioned 469, 470
Smoot, Mr. Mentioned 302
Smoot, David. Mentioned 240
Snow, Josiah. Mentioned 714, 790
Snyder, ———. Mentioned 279, 284, 581
Sommers, Rudolph.
Mentioned 227, 276, 333, 339–341, 592
Report of capture of U. S. S. Satellite, August 23, 1863 332
Sonoma, U. S. S.
Orders for movements 72
Wyman, R. H., appointed to command 50
Sophronia, U. S. schooner.
Captures made by 273
Cooperation with Army in expedition to Northern Neck of Virginia 442–451
Mentioned 142, 206, 207, 246, 260, 267, 274, 287, 307, 362, 366, 367, 374, 380, 389, 408, 437, 469, 498, 584, 604
Orders for movements 308
South Carolina.
Blockade of coast of. See *Blockade of Southern ports.*
Order raising blockade 568
South Carolina, U. S. S. Mentioned 630
South Carolina, Governor of. Mentioned 654, 656
South Carolina Troops. Mentioned.
Artillery—Beaufort Volunteers, 658.
Cavalry—Hampton's Legion, 449.
Southerner, Schooner. Seizure of 96, 97
Spafford, J. B. See *J. B. Spafford, Schooner.*
Spalding, C. C. Mentioned 61, 62, 93, 111
Sparrow, Jacob. Mentioned 763
Spearman, Mr. Mentioned 88, 99
Spencer, Hugh. Mentioned 161
Spillman, William D.
Mentioned 324, 325, 510, 592
Statement of capture of U. S. steamers Satellite and Reliance, August 23, 1863 323
Spisenger, Anthony. Mentioned 336, 337, 339
Spotts, James H. Mentioned 777, 784, 788
Squires, Ann. See *Ann Squires, Sloop.*
Staches, Joseph. Mentioned 151
Stackpole, Captain. Mentioned 129
Stadelhofer, Max. Mentioned 113
Stanton, Edwin M. Mentioned 555
For correspondence, see *War Department, U. S.*

Page.
Shirk, James W. Mentioned 249
Shore, E. Mentioned 7, 12, 14
Short, William H. Mentioned 218, 219
Shrieves, George D. Mentioned 358
Shubrick, William B. Correspondence with A. A. Harwood 320
Shurtleff, E. S. Mentioned 456, 524, 527, 528, 585, 586, 594
Sigel, Franz. Mentioned 155
Silner, Jacob. Mentioned 243
Silva, Elijah. Mentioned 179
Silvey, Samuel. Mentioned 96, 110
Simmons, Samuel A. Mentioned 191, 193–195
Simmons, Thomas, & Co. Mentioned 643
Simms, Charles C. Mentioned 805
Simms, George. Mentioned 5
Simpson, John. Mentioned 85
Sinclair, Arthur. Mentioned 801–803, 805
Sinclair, George T. Mentioned 803
Sleigenhammer, M. Mentioned 219
Slough, John P. Mentioned 352, 473
Slowman, B. W. Mentioned 652, 653
Sluyter, Stephen G. Correspondence with commanding officer of U. S. S. Tulip 354
Sly, D. W. Mentioned 104
Small, J. W. Mentioned 670
Small, James M. Mentioned 651
Small, Wilson G. See *Wilson G. Small, Steamer.*
Smedes, Bennet. Mentioned 16
Smith, Captain. Mentioned 794
Smith, Dr. Mentioned 605
Smith, Mrs. Mentioned 363
Smith, Anna. See *Anna Smith, Schooner.*
Smith, C. Ross. Correspondence with Judson Kilpatrick 327, 328
Smith, Charles. Mentioned 632
Smith, Charles. Mentioned 643
Smith, Dan. See *Dan Smith, U. S. schooner.*
Smith, E. Delafield. Mentioned 779
Smith, E. A., Mrs. Mentioned 685
Smith, Gustavus W. Mentioned 579
Smith, Heber. Mentioned 738–740
Smith, Henry. Mentioned 191
Smith, Henry F. Mentioned 192, 195
Smith, Isaac. Mentioned 40
Smith, J. F. Mentioned 228, 229
Smith, John. Mentioned 5
Smith, John. Mentioned 368
Smith, Morris. Mentioned 288
Smith, Parker. Mentioned 5
Smith, Peter. Arrest of, for complicity in burning of ship Alleghanian 141
Smith, Thomas E. Report of affairs in Accotink Creek, Virginia 108
Smith, Robert. Mentioned 810
Smith, William. Mentioned 518, 519
Smith, William H.
Correspondence with
Navy Department, U. S 425
Parker, F. A 400, 425
Mentioned 357, 442, 448, 584

Page.
Smith, William Taylor. Mentioned 805
Smith, William V. Mentioned 763
Smith's Island.
Damage done to light-house on. Report of William W. State 315
Capture of boat from light-ship at. Report of William A. Arthur 489
Measures for protection of light boat at.
Orders and instructions, Navy Department, U. S 519
Reports of
Nelson, Thomas 507
Parker, Foxhall A 519
Rumor of Confederate expedition to 476, 477
Smithers, John. Mentioned 469, 470
Smoot, Mr. Mentioned 302
Smoot, David. Mentioned 240
Snow, Josiah. Mentioned 714, 790
Snyder, ———. Mentioned 279, 284, 581
Sommers, Rudolph.
Mentioned 227, 276, 333, 339–341, 592
Report of capture of U. S. S. Satellite, August 23, 1863 332
Sonoma, U. S. S.
Orders for movements 72
Wyman, R. H., appointed to command 50
Sophronia, U. S. schooner.
Captures made by 273
Cooperation with Army in expedition to Northern Neck of Virginia 442–451
Mentioned 142, 206, 207, 246, 260, 267, 274, 287, 307, 362, 366, 367, 374, 380, 389, 408, 437, 469, 498, 584, 604
Orders for movements 308
South Carolina.
Blockade of coast of. See *Blockade of Southern ports.*
Order raising blockade 568
South Carolina, U. S. S. Mentioned 630
South Carolina, Governor of. Mentioned 654, 656
South Carolina Troops. Mentioned.
Artillery—Beaufort Volunteers, 658.
Cavalry—Hampton's Legion, 449.
Southerner, Schooner. Seizure of 96, 97
Spafford, J. B. See *J. B. Spafford, Schooner.*
Spalding, C. C. Mentioned 61, 62, 93, 111
Sparrow, Jacob. Mentioned 763
Spearman, Mr. Mentioned 88, 99
Spencer, Hugh. Mentioned 161
Spillman, William D.
Mentioned 324, 325, 510, 592
Statement of capture of U. S. steamers Satellite and Reliance, August 23, 1863 323
Spisenger, Anthony. Mentioned 336, 337, 339
Spotts, James H. Mentioned 777, 784, 788
Squires, Ann. See *Ann Squires, Sloop.*
Staches, Joseph. Mentioned 151
Stackpole, Captain. Mentioned 129
Stadelhofer, Max. Mentioned 113
Stanton, Edwin M. Mentioned 555
For correspondence, see *War Department, U. S.*

Page.
Star, Bark. Seizure o. 639
Star, Schooner. Coal taken from 207
Star, Steamer. Mentioned 422, 423, 425, 601
Star, U. S. S. See *Monticello, U. S. S.*
Starrett, G. Mentioned 355, 356
Stars and Stripes, U. S. S. Mentioned 680
State, William W. Report of damage done to Smith's Island light-house 315
State Department, U. S. Correspondence with
Liverpool, U. S. consul at 776, 783
London, U. S. consul at 778
Navy Department, U. S 663, 752, 776, 778
St. Petersburg, U. S. consul at 757
Toronto, U. S. counsel at 499
War Department, U. S 663
State of Georgia, Steamer. Mentioned 602
Stavey, N. H. Mentioned 333
Stepping Stones, U. S. S.
Attached to Potomac Flotilla 493
Engagement with Confederate forces in Occoquan Creek, Virginia 5
Mentioned 44, 95, 496, 502, 506, 508, 531, 544, 549, 558, 559, 567, 574, 599
Operations in Mattox Creek, Virginia, March 16–18, 1865 534–537
Reconnoissance in East River, Virginia 47
Sterling, John. Mentioned 141
Sterling, John. Mentioned 397
Sterrett, Mrs. Mentioned 603
Steuart, George H. Mentioned 425
Stevens, Steamer. Mentioned 595
Stevenson, Mr. Mentioned 149
Steward, Charles. Mentioned 350
Stewart, Dr. Mentioned 595
Stewart, Mrs. Mentioned 107
Stewart, Charles A. Mentioned 251, 289, 297, 303–305, 607
Stewart, E. V. Mentioned 167
Stewart, John. Shooting of. Report of Foxhall A. Parker 394
Stewart, R. B. Mentioned 365
Stewart, Robert G. Mentioned 222
Stewart, Robert H. Mentioned 107, 121
Stewart, R. H. Expedition to house of. Report of Thomas S. Phelps 106
Stimson, Valentine, & Co. Mentioned 643
Stockdale, James. Mentioned 73
Stockholm, ——. Mentioned 488
Stockton, Edward C.
Mentioned 653, 655–658
Testimony concerning capture of ship A. B. Thompson 654
Stoddard, E. M. Mentioned 695
Stone, Henry O. Mentioned 496, 502, 506, 508
Stonewall, C. S. ram. Preparation against surprise by 563, 565, 567
Stratford Mills, Va. Expedition to. Report of William T. Street 287
Street, William T.
Appointed to command
U. S. S. Jacob Bell 102, 181
Second Division Potomac Flotilla (temporarily) 206
Correspondence with
Arthur, William A 473, 484
Barnes, James 504

Stringham, S. H.—Continued. Page.
Reports of.
Rappahannock River. Affair on, between U. S. S. Monticello and Confederates 739, 740
Refugees. Transportation of 660
Rodman cannon. Purchase of vessel for 758
Savannah, C. S. privateer schooner. Capture of, by U. S. brig Perry 691
Seminole, U. S. S. Movements of 786
Sewell's Point, Va. Engagement between U. S. steamers Monticello and Thomas Freeborn and Confederate battery at 644
West India Squadron. Disposition of vessels 764
Young Greek, Bark. Assistance rendered, by steamer Cambridge 790
Stuart, David. Mentioned 115, 117
Stuart, E. V. Mentioned 158
Stuart, James E. B.
Correspondence with W. H. F. Lee 187
Mentioned 188, 322
Studley, Ira B.
Correspondence with Navy Department, U. S 36
Mentioned 41–43
Sturgeon Creek, Virginia. Skirmish in. Report of A. A. Harwood 62–64
Sturgis, Russell. Mentioned 663
Stutt's Creek, Virginia. Expedition to, September 24, 1864. Reports of
Arthur, William A 484
Parker, Foxhall A 484
Street, William T 484
Stuyvesant, M. S. Report of movements of John Taylor Wood 467
Sullivan, Edward. Mentioned 344
Summers, John. Mentioned 320
Summers, William H. Mentioned 535–537
Sumner, Edwin V. Mentioned 176
Surly, William. Mentioned 318
Susquehanna, U. S. S.
Condition of 772, 793
Mentioned 504, 743, 773, 777, 779, 788
Request for rifled cannon for 764
Sutlers' Vessels.
Detention of.
Communication from M. C. Meigs 262
Orders and instructions. A. A. Harwood 262
Frauds practiced by.
Communications from
Georgetown, D. C. Collector of customs at 233
Harwood, A. A 233
Orders and instructions, A. A. Harwood 233, 234, 236, 237
Reports of
Harwood, A. A 232, 237–239, 273
McCrea, E. P 234, 273
Revocation of order for detention 268
Suttle, Henry A. Mentioned 308
Sutton, Captain. Mentioned 751
Sutton, E. A., Mrs. Injuries done to property of. Report of Thomas H. Eastman 536
Sutton, James. Mentioned 250, 251, 605
Swann, J. T. Mentioned 136
Swift, Samuel. Mentioned 486
Swisher, Albert R. Mentioned ..... [illegible]

Page.
Sword, James. Mentioned 138
Sydney Jones, Schooner. Capture of 38
T. A. Ward, U. S. schooner.
Captures made by 114–117, 156, 161, 283
Mentioned 129, 139, 147, 149, 160, 162, 174, 204, 255, 260, 263
T. Berry, Sloop. Mentioned 608
Talbot, William. Mentioned 29, 30
Tallmadge, Grier. Correspondence with G. J. Pendergrast 701
Tangier Sound. Movements of Confederates in. Report of Edward Hooker. 516
Tanner's Creek, Virginia. Guns and equipments for. See *Virginia. Preparations for defense of.*
Tappahannock, Va. Expeditions to. Reports of
Linnekin, T. J 278
McCrea, E. P 33–36
Street, William T 277
Tattnall, Josiah. Mentioned 654, 656
Tayloe, Angelo. Mentioned 151
Tayloe, John.
Mentioned 4, 113
Taking of arms from house of 142
Taylor, ———. Mentioned 69
Taylor, Dr. Mentioned 424
Taylor, Mr. Depredations committed on plantation of.
Orders and instructions. Navy Department, U. S 441
Reports of
Parker, Foxhall A 441, 442
Street, William T 441
Taylor, George. Mentioned 222
Taylor, Henry. Mentioned 365
Taylor, James. Mentioned 222
Taylor, James, Acting Master.
Correspondence with
Hooker, E 461, 474, 514
Navy Department, U. S 554
Parker, F. A 512
Street, William T 308, 460, 504
Mentioned 389, 403, 496, 502, 506, 508, 510, 531
Taylor, John S. Mentioned 805
Taylor, John W. Mentioned 222
Taylor, Joseph H. Correspondence with F. D. Sewall 541
Taylor, Robert. Mentioned 370
Taylor, Samuel C. Mentioned 222
Taylor, William E. Mentioned 648
Taylor, William L. Mentioned 88
Teaser, C. S. S.
Assigned to Army duty 808
Mentioned 803, 809
Teaser,* U. S. S.
Assistance rendered U. S. transport steamer George Peabody 306
Boat expeditions from, to
Monroe's Creek, Virginia 251
Nomini, Va 386
Captures made by 131, 151, 153, 313
Inability to reach Gunpowder River bridge in time to prevent destruction. 470

* Formerly C. S. S. Teaser.

Teaser, U. S. S.—Continued. Page.
Engagement with Confederate battery at Brandywine Hill, Va., December 10, 1862 194
Expeditions to
Gwynn's Island, Virginia 147
Machodoc Creek, Virginia 410
Rosier's Creek, Virginia 249, 251
List of refugees, contrabands, and goods brought to Washington navy yard by 98
Mentioned 77, 96, 97, 100, 115, 127, 128, 132, 148, 150, 154, 171, 177, 180, 182, 189, 198, 200, 203, 204, 244-246, 255-258, 260, 265, 268, 294, 298, 321, 352, 360, 362, 367, 380, 383, 390, 396, 402, 408, 425, 426, 436, 437, 447, 460, 465, 466, 496, 502, 506, 508, 531, 582, 584, 593, 595, 604, 605, 608
Relieved from duty in Potomac Flotilla 567, 574
Telegraph, U. S. transport steamer. Depredations committed by, near mouth of Rappahannock River 70, 79
Tennent, George W. Mentioned 345
Tennessee.
List of guns sent from Norfolk navy yard to 806
Order raising blockade 568
Tennison, Mr. Mentioned 538
Teresa Cubana, Spanish bark. Mentioned 692
Teresa, Juana. See *Juana Teresa, Spanish brig.*
Terwilliger, Simon. Mentioned 456, 457
Texas. Blockade of coast of. See *Blockade of Southern ports.*
Thacker, H. C. Mentioned 643
Thomas, ———. Mentioned 785
Thomas, Midshipman. Mentioned 655
Thomas, John (Colored). Mentioned 491
Thomas, John. Mentioned 137, 303, 305
Thomas, W. H. Mentioned 382
Thomas C. Worrell, Sutler's schooner. Seizure of 237
Thomas Freeborn, U. S. S.
Abstract log, March 22, 1863, to June 17, 1865 611-613
Arrival of
At Fredericksburg, Va 51
In Potomac River 84
Captures made by 55, 59, 80, 85, 124, 146, 153, 486, 518
Condition of 420
Commanding officer. Correspondence with E. Hooker 565
Destruction of salt works in Shelton's Creek, Virginia 454, 455
Engagement with Confederate battery
Near Fort Lowry, Va., February 21, 1863 ..... 235, 236
At Sewell's Point, Va., May 18 and 19, 1861 644-648
Expeditions to
Dividing Creek, Virginia 455
Milford Haven and Stutt's Creek, Virginia 484
Mobjack Bay and Piankatank River 44-46
Old Haven Creek, Virginia 353
Hooker, E., appointed to command 356
Mentioned 8, 27, 28, 49, 52-54, 56, 58, 66, 67, 76, 78, 92, 93, 100, 101, 105, 113, 121, 123, 130, 142, 143, 145, 162, 168, 174, 176, 177, 190, 195, 200, 203, 204, 213, 242, 244, 246, 255-257, 260-264, 268, 281, 284, 287, 294, 323, 329, 343, 347, 348, 351-352, 358, 359, 362, 366, 367, 374, 391, 393, 397, 398, 402, 403, 406, 407, 408, 413, 415, 417, 427, 436, 437, 441, 444-448, 456, 481-483, 489, 496, 502, 506, 508, 510, 512, 526, 531, 532, 534, 543-546, 550, 562, 564, 582, 583, 585, 586, 591, 593, 594, 598-600, 607, 609, 661, 664, 665, 689, 785, 786, 788, 795

Page.
Sword, James. Mentioned 138
Sydney Jones, Schooner. Capture of 38
T. A. Ward, U. S. schooner.
Captures made by 114-117, 156, 161, 283
Mentioned 129, 139, 147, 149, 160, 162, 174, 204, 255, 260, 263
T. Berry, Sloop. Mentioned 608
Talbot, William. Mentioned 29, 30
Tallmadge, Grier. Correspondence with G. J. Pendergrast 701
Tangier Sound. Movements of Confederates in. Report of Edward Hooker. 516
Tanner's Creek, Virginia. Guns and equipments for. See *Virginia. Preparations for defense of.*
Tappahannock, Va. Expeditions to. Reports of
Linnekin, T. J 278
McCrea, E. P 33-36
Street, William T 277
Tattnall, Josiah. Mentioned 654, 656
Tayloe, Angelo. Mentioned 151
Tayloe, John.
Mentioned 4, 113
Taking of arms from house of 142
Taylor, ———. Mentioned 69
Taylor, Dr. Mentioned 424
Taylor, Mr. Depredations committed on plantation of.
Orders and instructions. Navy Department, U. S 441
Reports of
Parker, Foxhall A 441, 442
Street, William T 441
Taylor, George. Mentioned 222
Taylor, Henry. Mentioned 365
Taylor, James. Mentioned 222
Taylor, James, Acting Master.
Correspondence with
Hooker, E 461, 474, 514
Navy Department, U. S 554
Parker, F. A 512
Street, William T 308, 460, 504
Mentioned 389, 403, 496, 502, 506, 508, 510, 531
Taylor, John S. Mentioned 805
Taylor, John W. Mentioned 222
Taylor, Joseph H. Correspondence with F. D. Sewall 541
Taylor, Robert. Mentioned 370
Taylor, Samuel C. Mentioned 222
Taylor, William E. Mentioned 648
Taylor, William L. Mentioned 88
Teaser, C. S. S.
Assigned to Army duty 808
Mentioned 803, 809
Teaser,* U. S. S.
Assistance rendered U. S. transport steamer George Peabody 306
Boat expeditions from, to
Monroe's Creek, Virginia 251
Nomini, Va 386
Captures made by 131, 151, 153, 313
Inability to reach Gunpowder River bridge in time to prevent destruction. 470

* Formerly C. S. S. Teaser.

Tole, James C. Page.
Mentioned 54, 63–65, 77, 154, 204, 295, 364, 366, 452, 453, 467, 492, 496, 497, 502, 506, 508, 531
Report of capture of Confederates near Mathias Point, Va 489
Tomlinson, Samuel. Report of condition of U. S. S. Dawn 724
Toombs, Robert. Mentioned 693, 797
Toomey, Fred. Mentioned 211
Top, Edward W. Mentioned 113
Tordenskjold, Admiral Peter. See *Admiral Peter Tordenskjold, Norwegian bark.*
Toronto, U. S. Consul at. Correspondence with State Department, U. S. 499
Torpedoes.
Capture of 497
Description of 432, 433
Location of, in Rappahannock River 427, 482
Preparation of, by Confederates to attack U. S. S. Roanoke. 495, 497, 498, 500–503
Removal of, from Rappahannock River 429
Search for 575, 576
Towill, Mr. Mentioned 561
Townsend, E. D. Correspondence with B. F. Butler 458
Trader, Mr. Mentioned 209
Transfer of American vessels to British ownership. See *British ownership, Transfer of American vessels to.*
Transports, U. S.
Attack upon. Reports of
Harwood, A. A 305, 306
Schulze, G. C 305
Capture of. See *Harriet De Ford, U. S. transport. Capture of.*
Convoy and protection of.
Communications from
Hardie, James A 425
McClellan, George B 28
Pendergrast, G. J 677
Orders and instructions.
Navy Department, U. S 425, 451
Pendergrast, G. J 675
Taylor, James 308
Reports of
Eastman, Thomas H 452
Parker, Foxhall A 485
Sartori, L. C 686
Smith, W. H 425
Wyman, R. H 27, 28
See also *Potomac Flotilla. Cooperation of, in the movements of the Army of the Potomac.*
Depredations committed by. Report of F. Josselyn 70
Trask, ———. Mentioned 166
Travis, J. Thomas. Mentioned 285
Treakle, James. Mentioned 33
Treasury Department, C. S. Correspondence with B. C. Pressley 652
Treasury Department, U. S. Correspondence with
Dungan, Thomas M 158
Goodrich, John Z 642
Harrington, George 720
Howard, William A 704

Treasury Department, U. S.—Continued. Correspondence with Page.
Navy Department, U. S 704, 759
Rodney, Thomas M 720
Trenchard, Stephen D.
Correspondence with Navy Department, U. S 634
Report of transport of refugees to New York 684
Trescot, William H. Mentioned 654, 655, 657, 658
Triumph, Steamer. Mentioned 598
Tropic Wind, British schooner. Disposition of 667
Tuck, Amos. Mentioned 212
Tucker, John R.
Apppointed to command
C. S. S. Yorktown 802
Naval defenses of James River 797
Correspondence with
Lee, Robert E 797
Navy Department, C. S 812
Mentioned 803, 804
Tulip, U. S. S.
Condition of 372
Mentioned 323, 328, 352–354, 362, 363, 367, 374, 380, 383, 388, 391, 393, 398, 401, 402, 406–408, 415, 425, 436, 448, 474, 591
Turner, H. C., Mrs. Mentioned 685
Turner, James W.
Mentioned 299, 300, 309
Reports of.
Brandywine Hill, Va. Engagement at, December 10, 1862 193
Cassandra and Nanjemoy, Schooners. Capture of 301
Dana, U. S. schooner. Movements of 51
Turner, Robert. Mentioned 20
Turner, T. P. Mentioned 440
Turner, Thomas. Correspondence with A. Ludlow Case 140
Turpin, John. Mentioned 546
Turpin, Sewell. Mentioned 546
Two Brothers, Schooner.
Capture of 344
Mentioned 346
Tye, John. Mentioned 331, 592
Tyler, Erastus B. Mentioned 559
Tyler, John S.
Correspondence with John Z. Goodrich 643
Mentioned 642
Tyson, Jack. Mentioned 298
Uncle Ben, Steamer. Capture of 662–664, 669, 671
Underwriter, U. S. S. Mentioned 346
Union. Correspondence with Winfield Scott 715
Union, U. S. S.
Captures made by 690, 695, 707, 714, 728, 729
Mentioned 635, 662, 664, 665, 682, 683, 711, 726, 742, 744, 749, 753, 764, 793
Movements of 727, 741
Operations, etc., off Charleston, S. C 781
Orders for movements 743, 792, 795
Union Troops. Mentioned. Infantry—Regiments: 8th (*Regulars*), 550; 36th (*Colored*), 450.

United States, C. S. frigate. Page.
Fitting out of, as school ship 808
Mentioned 808
Upshur, John H. Mentioned 464
Urbana Creek, Virginia. Encampment of Confederate forces near. Report of Edward Hooker 395
Urbana, Va.
Engagement between U. S. S. Eureka and Confederates at. Report of Foxhall A. Parker 411
Reconnoissance near. Report of Edward Hooker 403
Shots fired over, by U. S. revenue steamer Hercules. Reports of
Dean, Benjamin C 160
Dungan, T. M. 158
Harwood, A. A 159, 178
Valentine, J. Mentioned 239
Van Boskirk, James.
Mentioned 204, 232, 233
Report of captures made by U. S. schooner Adolph Hugel 252
Van Brunt, Gershom J.
Correspondence with
Pendergrast, Garrett J 736
Stringham, Silas H 667
Mentioned 624, 730
Vandalia, U. S. ship.
Mentioned 636, 678, 680, 707, 728, 753, 792
Movements of 727
Orders for movements 659, 685, 795
Van Orden, W. T. B., jr. Mentioned 730
Vassar, Matthew. See *Matthew Vassar, U. S. ship.*
Vaux, Richard. See *Richard Vaux, Sloop-yacht.*
Verbena, U. S. tug.
Attached to Potomac Flotilla 468, 469
Mentioned 496, 502, 506, 508, 531, 567, 574
Vice-President, U. S. Correspondence with J. C. Peterson 782
Victoria, British schooner. Mentioned 714
Virginia.
Blockade of coast of. See *Blockade of Southern ports.*
List of vessels employed by, June 24, 1861 ..... [illegible]
Order raising blockade ..... [illegible]
Preparations for defense of.
Communications from
Huger, Benjamin ..... [illegible]
Lee, R. E ..... [illegible]
Navy Department, C. S ..... [illegible]
List of naval defenses ..... [illegible]
Orders and instructions.
Barron, S ..... [illegible]
Lee, R. E ..... [illegible]
Navy yard, Norfolk, Va., Commandant of ..... [illegible]
Virginia, Governor of ..... [illegible]
Report of S. Barron ..... [illegible]
Protection of citizens of.
Orders and instructions, Navy Department, U. S ..... [illegible]
Reports of
Magaw, Samuel ..... [illegible]
Wyman, R. H ..... [illegible]

United States, C. S. **frigate**. Page.
Fitting out of, as school ship 808
Mentioned 806
Upshur, John H. Mentioned 464
Urbana Creek, Virginia. Encampment of Confederate forces near. Report of Edward Hooker 395
Urbana, Va.
Engagement between U. S. S. Eureka and Confederates at. Report of Foxhall A. Parker 411
Reconnoissance near. Report of Edward Hooker 403
Shots fired over, by U. S. revenue steamer Hercules. Reports of
Dean, Benjamin C 160
Dungan, T. M. 158
Harwood, A. A 159, 178
Valentine, J. Mentioned 239
Van Boskirk, James.
Mentioned 204, 232, 233
Report of captures made by U. S. schooner Adolph Hugel 252
Van Brunt, Gershom J.
Correspondence with
Pendergrast, Garrett J 736
Stringham, Silas H 667
Mentioned 624, 730
Vandalia, U. S. ship.
Mentioned 636, 678, 680, 707, 728, 753, 792
Movements of 727
Orders for movements 659, 685, 795
Van Orden, W. T. B., jr. Mentioned 730
Vassar, Matthew. See *Matthew Vassar, U. S. ship.*
Vaux, Richard. See *Richard Vaux, Sloop-yacht.*
Verbena, U. S. tug.
Attached to Potomac Flotilla 468, 469
Mentioned 496, 502, 506, 508, 531, 567, 574
Vice-President, U. S. Correspondence with J. C. Peterson 782
Victoria, British schooner. Mentioned 714
Virginia.
Blockade of coast of. See *Blockade of Southern ports.*
List of vessels employed by, June 24, 1861 809
Order raising blockade 568
Preparations for defense of.
Communications from
Huger, Benjamin 802
Lee, R. E 806
Navy Department, C. S 808
List of naval defenses 804–806
Orders and instructions.
Barron, S 797, 802, 809
Lee, R. E 802, 808, 811
Navy yard, Norfolk, Va., Commandant of 798–802, 809–811
Virginia, Governor of 797
Report of S. Barron 803
Protection of citizens of.
Orders and instructions, Navy Department, U. S 52
Reports of
Magaw, Samuel 53
Wyman, R. H 31, 46

Page.

Virginia, C. S. ram. Movements of a party of marines from 537
Virginia, C. S. S. See *Merrimack, C. S. S.*
Virginia, Steamer.
Destruction of 37
Mentioned 26, 30, 31, 34, 579, 738, 809
Virginia, Eastern Shore of. Unprotected condition of.
Communications from
Lee, S. P 361
Navy Department, U. S 361
Report of A. A. Harwood 360
Virginia, Governor of.
Correspondence with
Barron, Samuel 803
Lee, Robert E 806
Tucker, John R 797
Virginia State Convention 809
Mentioned 763, 809
Virginia, Northern Neck of.
Combined Army and Navy expedition to, June 11-21, 1864.
Communications from
Draper, Alonzo G 450
Eastman, Thomas H 442, 445
Depredations committed during.
Communication from Thomas H. Eastman 451
Report of Edward Hooker 451
Orders and instructions.
Eastman, Thomas H 442
Hooker, Edward 443
Parker, Foxhall A 445
Street, William T 443
Reports of
Hooker, Edward 444-449
Parker, Foxhall A 449, 450
Street, William T 443
Cooperation of the Navy with the Army in expedition to, January 12, 1864.
Communication from Foxhall A. Parker 383
Orders and instructions, Foxhall A. Parker 386
Reports of
Hooker, Edward 382-384, 388
Parker, Foxhall A 388
Movements of Confederate troops on. Reports of
Hooker, Edward 468, 475, 510
Nelson, Thomas 511
Parker, Foxhall A 550
Virginia State Convention. Correspondence with Governor of Virginia 809
Virginia Troops. Mentioned.
Artillery—Moorman's Battery, 187; Norfolk Light Artillery Blues, 648; Stuart's Horse Artillery Battalion, 188; Walker's Battery, 27.
Cavalry—Regiments: 4th, 320; 5th, 345, 809; 9th, 113, 142, 318, 398, 522; 10th, 200, 297; 15th, 318; Stuart's, 187.
Infantry—Regiments: 12th, 520; 13th, 73; 26th, 598; 40th, 376; 55th, 320, 358, 370, 518, 597; Norfolk Junior Volunteers, 648; Northumberland Home Guards, 488, 490; Westmoreland Reserves, 582; Woodis Rifles, 648.
Vista, Sutler's schooner. Seizure of 238

Page.
Volunteer, Steamer. Mentioned 11
Vorger, Charles. Mentioned 344
Wabash, U. S. S.
Mentioned 635, 661, 662, 664, 677, 702, 714, 726–729, 742, 753, 763, 764, 781, 792
Movements of 684, 687
Ordered to duty in Atlantic Blockading Squadron 639
Wachusett, U. S. S.
Mentioned 79, 81, 84
Operations, etc., in Potomac River 77
Orders for movements 72
Wade, Benjamin F. Mentioned 644
Wadsworth, James S.
Correspondence with
Harwood, A. A 110
Shinn, Stephen 94
Mentioned 62, 64, 86, 94, 102, 104, 109, 110, 135
Wainwright, Jonathan M. Mentioned 775
Walker, Captain. Mentioned 805
Walker, Midshipman. Mentioned 655, 657, 658
Walker, Pilot. Mentioned 597
Walker, Benjamin. Mentioned 496, 502, 506, 508, 531, 592, 600
Walker, Charles H. Mentioned 596
Walker, Luther. Mentioned 520
Walker, William L. Mentioned 52, 53
Walker & Cunard. Mentioned 778
Wallace, J. S. Mentioned 158, 167
Wallace, Lew.
Correspondence with William T. Street 465
Report of burning of Gunpowder River bridge 460
Walter, Robert. Mentioned 161
Walters, Pilot. Mentioned 18
Walters, Henry.
Mentioned 143, 165, 247, 333–338, 341, 344, 345, 591, 592
Statement of capture of U. S. S. Reliance 342
Walton, Dr. Mentioned 112
War Department, C. S. Correspondence with Navy Department, C. S 578
War Department, U. S.
Correspondence with
Butler, Benjamin F 401
Drew, Charles H 555
Hoffman, William 438
Johnson & Higgins 663
Navy Department, U. S 47, 48, 347, 385
State Department, U. S 663
Transfer of a Rodman cannon from, to Atlantic Blockading Squadron.
Communications from
Navy Department, U. S 745
Stringham, S. H 750
Order countermanded 770
Purchase of vessel for 757, 758
Ward, C. F. Mentioned 126, 127
Ward, C. F. See *C. F. Ward, Life boat.*
Ward, James H. Mentioned 343, 644, 645, 661, 664, 665, 669, 677
Ward, R. C. A. See *R. C. A. Ward, Schooner.*
Ward, Stillman W. Mentioned 496, 502, 506, 508

Page.
Ward, T. A. See *T. A. Ward, U. S. schooner.*
Ward, W. Walter. Mentioned 219
Ware, Thomas R. Mentioned 708
Waring, S. J. See *S. J. Waring, Schooner.*
Warner, John. See *John Warner, Steamer.*
Warren, Gouverneur K. Mentioned 327
Warren, J. Mentioned 586
Warwick, Amy. See *Amy Warwick, Brig.*
Washington, George. Mentioned 715
Washington, George. See *George Washington, Schooner.*
Washington, Lady. See *Lady Washington, Yawl.*
Washington, Mary. See *Mary Washington, Vessel.*
Washington, D. C., U. S. District Judge. Correspondence with G. J. Pendergrast 670, 673, 674
Watch,* U. S. S. Relieved from duty in Potomac Flotilla 574
Waterman, E. See *E. Waterman, Schooner.*
Watson, Mr. Mentioned 251, 605
Watson, Charles F. Mentioned 145, 146, 176, 582
Watson, James. Mentioned 336, 339
Watson, Josiah. Mentioned 795
Watson, William S. Mentioned 208
Watts, Samuel. Mentioned 632
Webster, Alexander. Mentioned 211, 212
Webster, C. Everett. Mentioned 686
Webster, Dan. See *Dan Webster, Steamer.*
Weems, George. See *George Weems, Steamer.*
Weever, J. Mentioned 239
Weidman, John. Report of attempt to destroy steamers Satellite and Reliance 330
Welch, James. Mentioned 337, 339
Welch, James F. Mentioned 491
Welch, John L. Mentioned 67
Welles, Benjamin F. Mentioned 320, 321, 591
Welles, Gideon. Mentioned 126, 201
For correspondence, see *Navy Department, U. S.*
Wells, Mrs. Mentioned 526
Wells, A. H. Mentioned 283
Wells, C. H. Report of capture of schooners St. Mary's and J. B. Spafford by John C. Braine 540
Wells, John C. Mentioned 686
Welsh, John. See *John Welsh, Brig.*
Welsh, Mary, Mrs. Mentioned 684
Went, G. M. Report of condition of U. S. S. Monticello 676
Werden, Reed. Mentioned 762, 775
Wessels, William. Mentioned 151
West, George N. Mentioned 88, 102
West India Squadron.
Affairs of.
Orders and instructions, Navy Department, U. S. 696
Report of G. J. Pendergrast 706
Cooperation of, with the Army.
Communication from G. J. Pendergrast 674
Orders and instructions, G. J. Pendergrast 674
Report of G. J. Pendergrast 675

* Purchased under name of A. C. Powell, which see; name then changed to Alert, which see; then to Watch.

West India Squadron—Continued. Page.
Increase of force 678, 681
Disposition of vessels. Report of S. H. Stringham 764
Hoisting of flag of, on U. S. S. Roanoke. Report of G. J. Pendergrast 766
Need of paymaster for 669, 691, 695, 708
Order of Navy Department, U. S., regarding name and vessels 636
Supplies for. Report of G. J. Pendergrast 636, 681, 716
Vessels constituting 636
Western World, U. S. S.
Attached to Potomac Flotilla 527
Mentioned 391, 393, 408, 409, 521, 543
Relieved from duty in Potomac Flotilla 567, 574
Weston, Robert D. Mentioned 518
Wheatley, Edward. Mentioned 602
Wheeler, Peter. Mentioned 309
Wheeler, Thomas. Mentioned 309
White, Frank J. Correspondence with
Butler, Benjamin F 413
Hoffman, William 476
White, John W. Mentioned 591
White, Julius C. Mentioned 222
White, Richard. Mentioned 794
White, Virginia. Mentioned 685
White, William W. Statement concerning purchase of C. S. S. Lady Davis by C. S. Government from State of South Carolina 657
Whiting, William D. Correspondence with Navy Department, U. S 76
Whitington, ———. Mentioned 483
Whitlock, Mr. Mentioned 663
Whitman, John. Mentioned 85
Whitmore, Henry C. Mentioned 241, 308
Whittle, William C.
Correspondence with D. N. Ingraham 812
Mentioned 801
Wible, William. Mentioned 344
Wiggins, Mr. Mentioned 147, 148
Wilbur, Robert. See *Robert Wilbur, Schooner.*
Wilding, Henry. For correspondence, see *Liverpool, U. S. consul at.*
Wilkes, Charles.
Appointed to command Potomac Flotilla 72, 76
Correspondence with
Harwood, Andrew A 84
Navy Department, U. S 68, 75
Mentioned 70, 71, 73, 76, 78
Relieved of command of
James River Flotilla 72
Potomac Flotilla 82
Reports of.
Orders. Receipt of 74
Potomac Flotilla. Disposition of vessels of 77
Wyandank, U. S. S. Captures made by 81
Willcox, Charles H. Mentioned 653
Willet, Joseph. Mentioned 456, 457
William and John, Schooner.
Capture of 637
Mentioned 729

William Bacon, U. S. schooner. Page.
Captures made by 132, 136, 392
Condition of 293
Examination of schooner George H. Berry 87
Mentioned 88, 99, 100, 102, 113, 131, 133, 137, 142, 347, 360, 362, 367, 391, 393, 407, 408, 436, 496, 502, 506, 508, 531, 567, 574, 601
Orders for movements 346
William G. Putnam, U. S. S.
Attack upon, in York River, Virginia 417
Mentioned 140, 531, 549, 551, 561, 562
Orders for movements 543
Relieved from duty in Potomac Flotilla 567, 574
William H. Price, Schooner. Mentioned 594
William Henry, Schooner.
Capture of 637
Mentioned 729
William Seabrook, Steamer. Mentioned 635
Williams, D. H. Mentioned 239
Williams, George. Mentioned 157, 161
Williams, Griffin. Correspondence with Robert H. Wyman 42
Williams, H. Mentioned 138
Williams, John. Mentioned 231, 232
Williams, Seth.
Correspondence with
Hooker, Joseph 13
Magaw, S 255, 264
Navy Department, U. S 13
Pleasonton, Alfred 264
Mentioned 13, 263
Willis, Mary. See *Mary Willis, Schooner.*
Willis, William. Mentioned 161
Wills, J. Correspondence with Inquirer and Chronicle 458
Wilmer, J. B. B. Mentioned 226, 227
Wilmington, N. C. Blockade of. See *Blockade of Southern ports.*
Wilson, A. J. Mentioned 345
Wilson, Edward. Mentioned 155
Wilson, Edward. Mentioned 98
Wilson, James. Mentioned 474
Wilson, John S. Mentioned 240
Wilson, Peter. Correspondence with Navy Department, U. S 766
Wilson, Thomas W.
Correspondence with G. J. Pendergrast 713
Mentioned 712, 718, 719
Wilson G. Small, Steamer.
Mentioned 174
Report of Commander J. W. Livingston concerning 767
Winder, G. B. Mentioned 598
Winder, John H. Mentioned 105
Winder, W. S. Mentioned 67
Winder, William. Mentioned 209
Windmill Point, Va. Expedition to. Report of William T. Street 364
Winfield, William. Mentioned 382
Winfred, Bark. Capture of 669
Winslow, Samuel. Mentioned 289
Wirt, William. Mentioned 81

Page.
Volunteer, Steamer. Mentioned 11
Vorger, Charles. Mentioned 344
Wabash, U. S. S.
Mentioned 635, 661, 662, 664, 677, 702, 714, 726–729, 742, 753, 763, 764, 781, 792
Movements of 684, 687
Ordered to duty in Atlantic Blockading Squadron 639
Wachusett, U. S. S.
Mentioned 79, 81, 84
Operations, etc., in Potomac River 77
Orders for movements 72
Wade, Benjamin F. Mentioned 644
Wadsworth, James S.
Correspondence with
Harwood, A. A 110
Shinn, Stephen 94
Mentioned 62, 64, 86, 94, 102, 104, 109, 110, 135
Wainwright, Jonathan M. Mentioned 775
Walker, Captain. Mentioned 805
Walker, Midshipman. Mentioned 655, 657, 658
Walker, Pilot. Mentioned 597
Walker, Benjamin. Mentioned 496, 502, 506, 508, 531, 592, 600
Walker, Charles H. Mentioned 596
Walker, Luther. Mentioned 520
Walker, William L. Mentioned 52, 53
Walker & Cunard. Mentioned 778
Wallace, J. S. Mentioned 158, 167
Wallace, Lew.
Correspondence with William T. Street 465
Report of burning of Gunpowder River bridge 460
Walter, Robert. Mentioned 161
Walters, Pilot. Mentioned 18
Walters, Henry.
Mentioned 143, 165, 247, 333–338, 341, 344, 345, 591, 592
Statement of capture of U. S. S. Reliance 342
Walton, Dr. Mentioned 112
War Department, C. S. Correspondence with Navy Department, C. S 578
War Department, U. S.
Correspondence with
Butler, Benjamin F 401
Drew, Charles H 555
Hoffman, William 438
Johnson & Higgins 663
Navy Department, U. S 47, 48, 347, 385
State Department, U. S 663
Transfer of a Rodman cannon from, to Atlantic Blockading Squadron.
Communications from
Navy Department, U. S 745
Stringham, S. H 750
Order countermanded 770
Purchase of vessel for 757, 758
Ward, C. F. Mentioned 126, 127
Ward, C. F. See *C. F. Ward, Life boat.*
Ward, James H. Mentioned 343, 644, 645, 661, 664, 665, 669, 677
Ward, R. C. A. See *R. C. A. Ward, Schooner.*
Ward, Stillman W. Mentioned 496, 502, 506, 508

Wyman, R. H. Page.
Appointed to command of U. S. S. Sonoma 50
Assumes command of Potomac Flotilla 3
Correspondence with
Badger, Oscar C 44
Navy Department, U. S 10, 12, 39
Doggett, William 41
Dunton, Louisa 42
Gresham, James W 42
Lee, George G 41
McKenney, B. B 40
Magaw, Samuel 45
Parker, F. A 481
Sanders, A. M 43
Street, William T 4
Williams, Griffen 42
Mentioned 10, 17, 18, 22, 28, 36, 48, 50, 51, 54, 558
Proposition of, for operations against Confederate batteries on Potomac River 20
Relieved of command of Potomac Flotilla 50
Reports of.
Blockade. Means for more efficient 38
Boyd's Hole and Lower Shipping Point, Va. Confederate batteries at. 7
Chicomuxen Creek, Virginia. Necessity for armed launch at 11
Cockpit and Shipping Points, Va. Abandonment of batteries at 23, 25
Cockpit Point, Va. Attacks upon Confederate battery at, by U. S. steamers Anacostia and Yankee 15
Confederate forces. Movements of 29, 30
Dorothy Haynes, Schooner. Examination of 19, 20
E. H. Herbert and James Murray, Tugs. Discharge of 14
East River, Virginia. Expedition to 47
Fredericksburg, Va.
Concentration of Confederate troops near 25–27, 30–32
Expedition to 37, 38
Freestone Point, Va. Attack upon Confederate pickets near 3
Fort Lowry, Va. Abandonment of 33
George Page, Steamer. Practicability of cutting out of 6
Hampton Roads, Va. Dispatch of U. S. vessels to 47, 50
Mathews County, Va. Expedition into 49
Mobjack Bay and Piankatank River. Reconnoissance in 44
Otterback, Philip, jr. Protection extended to 21
Potomac Flotilla.
Captures made by 9, 16, 33, 40, 48, 49
Insufficiency of force 19
Supplies for 8
Potomac River.
Affairs on 4, 8, 13
Passage of Confederate batteries on, by vessels of Potomac Flotilla 22
Practicability of blocking channel of 27
Prisoners. Release of 50
St. Lawrence, U. S. frigate. Movements of 31
Transports, U. S. Convoy and protection of 27, 28
Virginia.
Protection to citizens of 23, 46
Union sentiment in 31

West India Squadron—Continued. Page.
Increase of force 678, 681
Disposition of vessels. Report of S. H. Stringham 764
Hoisting of flag of, on U. S. S. Roanoke. Report of G. J. Pendergrast 766
Need of paymaster for 669, 691, 695, 708
Order of Navy Department, U. S., regarding name and vessels 636
Supplies for. Report of G. J. Pendergrast 636, 681, 716
Vessels constituting 636
Western World, U. S. S.
Attached to Potomac Flotilla 527
Mentioned 391, 393, 408, 409, 521, 543
Relieved from duty in Potomac Flotilla 567, 574
Weston, Robert D. Mentioned 518
Wheatley, Edward. Mentioned 602
Wheeler, Peter. Mentioned 309
Wheeler, Thomas. Mentioned 309
White, Frank J. Correspondence with
Butler, Benjamin F 413
Hoffman, William 476
White, John W. Mentioned 591
White, Julius C. Mentioned 222
White, Richard. Mentioned 794
White, Virginia. Mentioned 685
White, William W. Statement concerning purchase of C. S. S. Lady Davis by C. S. Government from State of South Carolina 657
Whiting, William D. Correspondence with Navy Department, U. S 76
Whitington, ———. Mentioned 483
Whitlock, Mr. Mentioned 663
Whitman, John. Mentioned 85
Whitmore, Henry C. Mentioned 241, 308
Whittle, William C.
Correspondence with D. N. Ingraham 812
Mentioned 804
Wible, William. Mentioned 344
Wiggins, Mr. Mentioned 147, 148
Wilbur, Robert. See *Robert Wilbur, Schooner.*
Wilding, Henry. For correspondence, see *Liverpool, U. S. consul at.*
Wilkes, Charles.
Appointed to command Potomac Flotilla 72, 76
Correspondence with
Harwood, Andrew A 84
Navy Department, U. S 68, 75
Mentioned 70, 71, 73, 76, 78
Relieved of command of
James River Flotilla 72
Potomac Flotilla 82
Reports of.
Orders. Receipt of 74
Potomac Flotilla. Disposition of vessels of 77
Wyandank, U. S. S. Captures made by 81
Willcox, Charles H. Mentioned 653
Willet, Joseph. Mentioned 456, 457
William and John, Schooner.
Capture of 637
Mentioned 729